Valve Mounted Cylinder

CV□ Series

ø10, ø16, ø20, ø25, ø32, ø40, ø50, ø63, ø80, ø100

Series Variations

Series	Action		Standard variations: Built-in magnet	With air cushion	Built-in One-touch fitting	With auto switch	With strong scraper	Bore size (mm)	Page
CVJ5 series 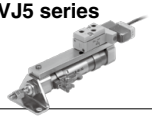	Double acting		●			●		10 · 16	P.1154
CVJ3 series 	Single acting (Spring return) (Spring extend)		●			●		10 · 16	P.1164
CVM5/CVM5K series 	Double acting	Standard	●		●	●	●	20 · 25 · 32 · 40	P.1175 · P.1185
		Non-rotating rod	●		●	●			
CVM3/CVM3K series 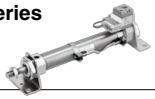	Single acting (Spring return) (Spring extend)	Standard	●		●	●		20 · 25 · 32 · 40	P.1194 · P.1207
		Non-rotating rod	●		●	●			
CV3/CV3K series 	Double acting	Standard	●	●		●	●	40 · 50 · 63 · 80 · 100	P.1216
		Non-rotating rod	●	●		●		40 · 50 · 63	P.1228
CVS1 series 	Double acting		●	●		●	●	40 · 50 · 63 · 80 · 100	P.1238

Valve Mounted Cylinder
Double Acting, Single Rod
CVJ5 Series

ø10, ø16

How to Order

Stroke (mm)

ø10	15, 30, 45, 60
ø16	15, 30, 45, 60

Electrical entry

G	Grommet
L	L plug connector
M	M plug connector

Light/Surge voltage suppressor

Nil	Without light/surge voltage suppressor
S	With surge voltage suppressor
Z	With light/surge voltage suppressor
R	With surge voltage suppressor (No polarity)
U	With light/surge voltage suppressor (No polarity)

∗ Type "R", "U": DC only
∗ In the case of AC, since the rectifier prevents the production of surge voltage, there is no type "S".

Mounting type

B	Basic type
L	Axial foot type
F	Rod side flange type

Bore size

10	10 mm
16	16 mm

CVJ5 L 16 – 60 □ – 5 L □ – □

With auto switch CDVJ5 L 16 – 60 □ – 5 L □ – M9BW □ – C – □

With auto switch
(Built-in magnet)

Rod extended/retracted when energized

Nil	Rod extended when energized
B	Rod retracted when energized

Solenoid valve voltage

DC specifications		AC specifications (50/60 Hz)	
5	24 VDC	1	100 VAC
6	12 VDC	2	200 VAC
V	6 VDC	3	110 VAC (115 VAC)
S	5 VDC	4	220 VAC (230 VAC)
R	3 VDC		

Auto switch
Magnet installed even without auto switch

Symbol	Auto switch mounting
A	Rail mounting type
B	Band mounting type

∗ For the applicable auto switch model, refer to the table below.

Auto switch mounting bracket Note)
Note) This symbol is indicated when the D-A9□ or M9□ type auto switch is specified. This mounting bracket does not apply to other auto switches (D-C7□ and H7□, etc.) (Nil)

Number of auto switches

Nil	2 pcs.
S	1 pc.
n	"n" pcs.

Made to Order
Refer to page 1155 for details.

Built-in Magnet Cylinder Model

Suffix the symbol "-A" (Rail mounting type) or "-B" (Band mounting type) to the end of the w/ auto switch cylinder part number.

Example	Rail mounting type	CDVJ5B16-60-A
	Band mounting type	CDVJ5B10-45-B

Applicable Auto Switches/Refer to pages 1341 to 1435 for further information on auto switches.

Type	Special function	Electrical entry	Indicator light	Wiring (Output)	Load voltage DC	Load voltage AC	Auto switch model: Band mounting Perpendicular	Band mounting In-line	Rail mounting Perpendicular	Rail mounting In-line	Lead wire length (m) 0.5 (Nil)	1 (M)	3 (L)	5 (Z)	None (N)	Pre-wired connector	Applicable load	
Solid state auto switch	—	Grommet	Yes	3-wire (NPN)	24 V, 5 V, 12 V	—	M9NV	M9N	—	—	●	●	●	○	—	○	IC circuit	Relay, PLC
							—	—	F7NV	F79	●	—	●	○	—	○		
				3-wire (PNP)			M9PV	M9P	—	—	●	●	●	○	—	○		
							—	—	F7PV	F7P	●	—	●	○	—	○		
				2-wire		12 V	M9BV	M9B	—	—	●	●	●	○	—	○	—	
							—	—	F7BV	J79	●	—	●	○	—	○		
		Connector					—	H7C	J79C	—	●	—	●	●	●	—		
	Diagnostic indication (2-color indicator)	Grommet		3-wire (NPN)		5 V, 12 V	M9NWV	M9NW	—	—	●	●	●	○	—	○	IC circuit	
							—	—	F7NWV	F79W	●	—	●	○	—	○		
				3-wire (PNP)			M9PWV	M9PW	—	—	●	●	●	○	—	○		
							—	—	—	F7PW	●	—	●	○	—	○		
				2-wire		12 V	M9BWV	M9BW	—	—	●	●	●	○	—	○	—	
							—	—	F7BWV	J79W	●	—	●	○	—	○		
	Water resistant (2-color indicator)			3-wire (NPN)		5 V, 12 V	M9NAV∗1	M9NA∗1	—	—	○	○	●	○	—	○	IC circuit	
				3-wire (PNP)			M9PAV∗1	M9PA∗1	—	—	○	○	●	○	—	○		
				2-wire		12 V	M9BAV∗1	M9BA∗1	—	—	○	○	●	○	—	○	—	
				4-wire (NPN)		5 V, 12 V	—	H7NF	—	F79F	●	—	●	○	—	○	IC circuit	
Reed auto switch	—	Grommet	Yes	3-wire (NPN equivalent)	—	5 V	A96V	A96	—	A76H	●	—	●	—	—	—	IC circuit	—
				2-wire	24 V	—	—	200 V	—	—	A72	A72H	●	—	●	—	—	—	Relay, PLC
			No			12 V	100 V	A93V∗2	A93	A73	A73H	●	●	●	●	—	—	
							100 V or less	A90V	A90	A80	A80H	●	—	●	—	—	—	IC circuit	
		Connector	Yes				—	—	C73C	A73C	—	●	—	●	●	●	—	—	
			No				24 V or less	—	C80C	A80C	—	●	—	●	●	●	—	IC circuit	
	Diagnostic indication (2-color indicator)	Grommet	Yes			—	—	—	—	A79W	—	●	—	●	—	—	—	—	

∗ Lead wire length symbols: 0.5 m ····· Nil (Example) M9NW
1 m ····· M (Example) M9NWM
3 m ····· L (Example) M9NWL
5 m ····· Z (Example) M9NWZ

∗ Since there are other applicable auto switches than listed, refer to page 1163 for details.
∗ For details about auto switches with pre-wired connector, refer to pages 1410 and 1411.

∗ Solid state auto switches marked with "○" are produced upon receipt of order.
∗ D-A9□/M9□/A7□□/A80□/F7□□/J7□□ auto switches are shipped together (not assembled). (For D-A9□/M9□, only auto switch mounting brackets are assembled before shipped.)
∗ D-C7□□/C80□/H7□□ auto switches are assembled at the time of shipment.
∗ Order auto switch mounting brackets separately when D-A9□(V)/M9□(V)/M9□W(V)/M9□A(V) are mounted on ø10 and ø16 of the rail mounting type. Refer to page 1163 for details.
∗1 Water resistant type auto switches can be mounted on the above models, but in such case SMC cannot guarantee water resistance. Consult with SMC regarding water resistant types with the above model numbers.
∗2 1 m type lead wire is only applicable to D-A93.

Operation type can be changed to rod extended when energized or rod retracted when energized.

An auto switch cylinder with the switch installed can also be manufactured.

Symbol
Double acting/Single rod, Rubber bumper

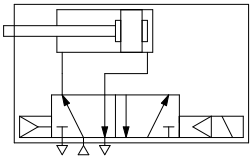

Made to Order Specifications
Click here for details

Symbol	Specifications
-XA□	Change of rod end shape

Specifications

Bore size (mm)	ø10	ø16
Action	Double acting, Single rod	
Fluid	Air	
Proof pressure	1.05 MPa	
Maximum operating pressure	0.7 MPa	
Minimum operating pressure	0.15 MPa	
Ambient and fluid temperature	–10 to 50°C (No freezing)	
Cushion	Rubber bumper	
Lubrication	Not required (Non-lube)	
Stroke length tolerance	$^{+1.0}_{0}$	
Port size	M5 x 0.8	
Mounting	Basic type, Axial foot type, Rod side flange type	
Piston speed	50 to 750 mm/s	50 to 150 mm/s
Allowable kinetic energy	0.035J	0.090J

Solenoid Valve Specifications

Applicable solenoid valve model			SYJ3190
Electrical entry			Grommet (G), L plug connector (L), M plug connector (M)
Coil rated voltage (V)	**DC**		24, 12, 6, 5, 3
	AC 50/60 Hz		100, 110, 200, 220
Effective area of valve (Cv factor)			1.8 mm² (0.1)
Allowable voltage			±10% of the rated voltage*
Power consumption (W)	**DC**	**Standard**	0.35 (With indicator light: 0.4)
Apparent power (VA)*	**AC**	**100 V**	0.78 (With indicator light: 0.81)
		110 V [115 V]	0.86 (With indicator light: 0.89) [0.94 (With indicator light: 0.97)]
		200 V	1.18 (With indicator light: 1.22)
		220 V [230 V]	1.30 (With indicator light: 1.34) [1.42 (With indicator light: 1.46)]
Surge voltage suppressor			Diode (Varistor for the non-polar type)
Indicator light			LED

* 110 VAC and 115 VAC types and 220 VAC and 230 VAC types are common respectively.
* For 115 VAC and 230 VAC, allowable voltage fluctuation is –15 to +5 % of the rated voltage.
* For S and Z, the voltage will drop due to the internal circuit. Allowable voltage fluctuation must be in the range below.
  Types S, Z 24 VDC: –7 to 10 %, 12 VDC: –4 to 10 %

Standard Stroke

(mm)

Bore size (mm)	Standard stroke
10	15, 30, 45, 60
16	15, 30, 45, 60

* If types for more than the strokes indicated in the table above (61 strokes) are required, please ask SMC.

Mounting Type and Accessory/For details, refer to page 1159.

	Mounting	Basic type	Axial foot type	Rod side flange type
Standard equipment	Mounting nut	●	●	●
	Rod end nut	●	●	●
Option	Single knuckle joint	○	○	○
	Double knuckle joint (With pin)*	○	○	○

* Knuckle pin and retaining ring are shipped together.
●···Supplied with the product.
○···Please order separately.

Weight

(g)

Bore size (mm)		10	16
Basic weight*		71	99
Additional weight per each 15 mm of stroke		6.5	9.5
Mounting bracket weight	Axial foot type	7	19
	Rod side flange type	5	13

* Mounting nut and rod end nut are included in the basic weight.

Calculation: (Example) **CVJ5L10-45-1G**
- Basic weight·····71 (g) (ø10)
- Additional weight ·····6.5/15 stroke
- Cylinder stroket ·····45 stroke
- Weight of bracket ·····7 (g) (Axial foot type)

71 + 6.5/15 x 45 + 7 = 97.5 g

Mounting Bracket Part No.

Mounting bracket	Bore size (mm)	
	10	16
Foot	CJ-L010C	CJ-L016C
Flange	CJ-F010C	CJ-F016C

Accessory (Option)

Refer to page 1159 for part numbers and dimensions of the single knuckle joint, double knuckle joint, knuckle pin, mounting nut, and rod end nut.

Changing between Rod Extended when Energized and Rod Retracted when Energized

<Step>
This procedure is for changing the rod extended when energized to the rod retracted when energized.

1. Using a screwdriver, loosen the two small round head screws, and remove the plate and the solenoid valve. At this time, instead of removing the plate and the solenoid valve separately, remove them together, with the round head screws remaining inserted.

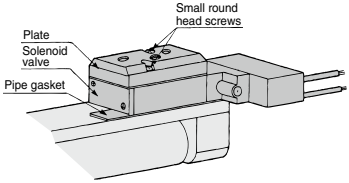

2. Turn the pipe gasket at 180° and mount, showing the letter "B".

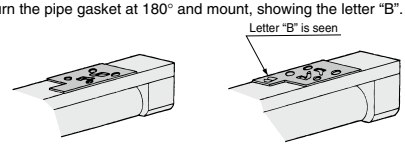

3. Install the solenoid valve and the plate, and tighten the small round head screws, with a screw driver. After tightening, press the manual button on the solenoid valve, check for any air leaks, and verify the operating conditions. When the cylinder is viewed from above, the position of the gasket is as shown in the figure below.

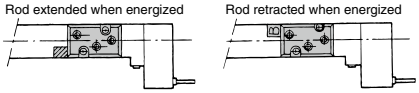

Manual Operation

Manual operation is possible by pushing the manual button indicated with the arrow.

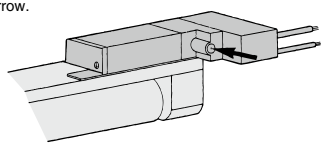

⚠ Specific Product Precautions

Be sure to read this before handling the products. Refer to page 9 for safety instructions, pages 10 to 19 for actuator and auto switch precautions, and 3/4/5-port solenoid valve precautions on the SMC website:https://www.smcworld.com

Handling Precautions

⚠ Caution

1. During installation, secure the rod cover and tighten the mounting nut or the rod cover body by applying an appropriate tightening force.

If the head cover is secured or the head cover is tightened, the cover may rotate, leading to the deviation.

2. Tighten the mounting screws with an appropriate tightening torque within the range given below.

ø6: 2.1 to 2.5 N·m, ø10: 5.9 to 6.4 N·m
ø16: 10.8 to 11.8 N·m

3. To remove and install the retaining ring for the knuckle pin or the clevis pin, use an appropriate pair of pliers (tool for installing a type C retaining ring).

In particular, use a pair of ultra-mini pliers for removing and installing the retaining rings on the ø10 cylinder.

4. For the auto switch mounting rail, do not remove the pre-equipped rail.

Since the mounting thread is drilled through inside the cylinder, it may cause air leakage.

⚠ Warning

1. Confirm the specifications.

Products in this catalog are designed to be used for compressed air systems. If not operated within the designated pressure or temperature, it may damage the products or cause malfunction. (Refer to specifications.)

2. Energizing continuously for a long period of time

When the valve is continuously energized for a long period of time, the performance may deteriorate, shorten the service life or effect peripheral equipment adversely since temperature rises when coils generate heat.

Construction/(Not able to disassemble.)

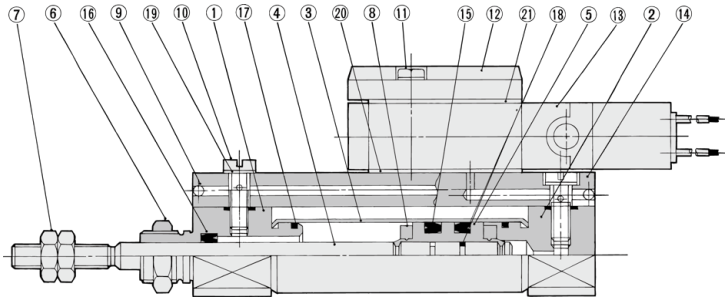

Component Parts

No.	Description	Material	Note
1	**Rod cover**	Aluminum alloy	Clear anodized
2	**Head cover**	Aluminum alloy	Clear anodized
3	**Cylinder tube**	Stainless steel	
4	**Piston rod**	Stainless steel	
5	**Piston**	Aluminum alloy	Chromated
6	**Mounting nut**	Brass	Nickel plated
7	**Rod end nut**	Rolled steel	Zinc chromated
8	**Bumper**	Urethane	
9	**Steel ball**	Carbon steel	
10	**Stud**	Brass	Electroless nickel plated
11	**Phillips screw**	Rolled steel	Zinc chromated

No.	Description	Material	Note
12	**Plate**	Zinc alloy	
13	**Solenoid valve**	—	∗ Refer to the note below.
14	**Pipe**	Aluminum alloy	Clear anodized
15	**Piston seal**	NBR	
16	**Rod seal**	NBR	
17	**Tube gasket**	NBR	
18	**Piston gasket**	NBR	
19	**Gasket**	NBR + Stainless steel 304	
20	**Pipe gasket**	NBR	
21	**Plate gasket**	NBR	

∗ How to order solenoid valves

SYJ3190 − □□□

Rated voltage • • Light/surge voltage suppressor

• Electrical entry

Basic Type (B)

CVJ5

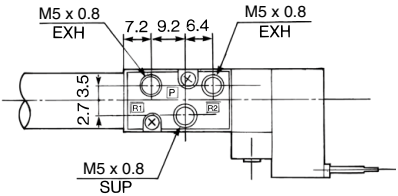

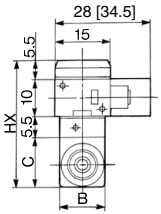

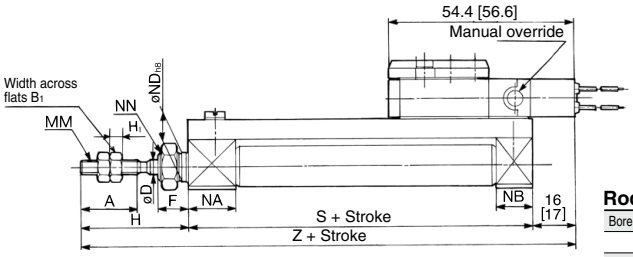

Rod End Nut

Bore size (mm)	B_1	H_1
10	7	3.2
16	8	4

∗ [ ]: Denotes the values of AC.

(mm)

Bore size	A	B	C	D	F	H	HX	MM	NA	NB	ND	NN	S	Z
10	15	12	14	4	8	28	35	M4 x 0.7	12.5	9.5	$8^{0}_{-0.022}$	M8 x 1	46	90 [91]
16	15	18	20	5	8	28	41	M5 x 0.8	12.5	9.5	$10^{0}_{-0.022}$	M10 x 1	47	91 [92]

Axial Foot Type (L)

CVJ5L

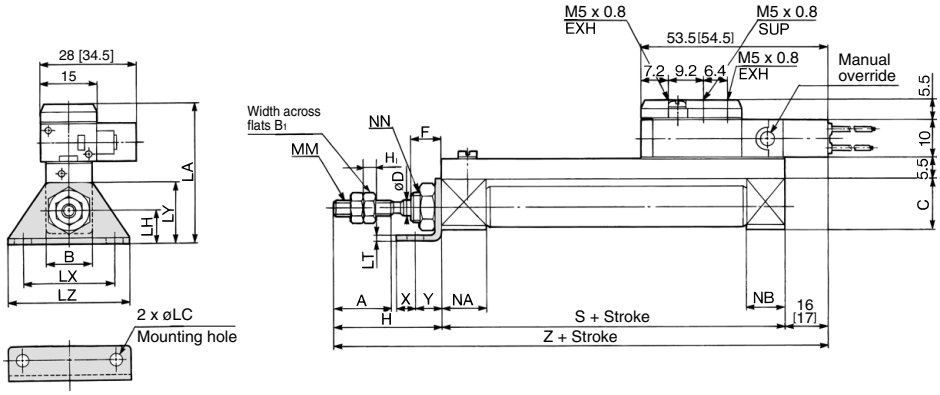

Rod End Nut

Bore size (mm)	B_1	H_1
10	7	3.2
16	8	4

∗[ ]: Denotes the values of AC.

(mm)

Bore size	A	B	C	D	F	H	LA	LC	LH	LT	LX	LY	LZ	MM	NA	NB	NN	S	X	Y	Z
10	15	12	14	4	8	28	38	4.5	9	1.6	24	16.5	32	M4 x 0.7	12.5	9.5	M8 x 1	46	5	7	90 [91]
16	15	18	20	5	8	28	46	5.5	14	2.3	33	25	42	M5 x 0.8	12.5	9.5	M10 x 1	47	6	9	91 [92]

Rod Side Flange Type (F)

CVJ5F

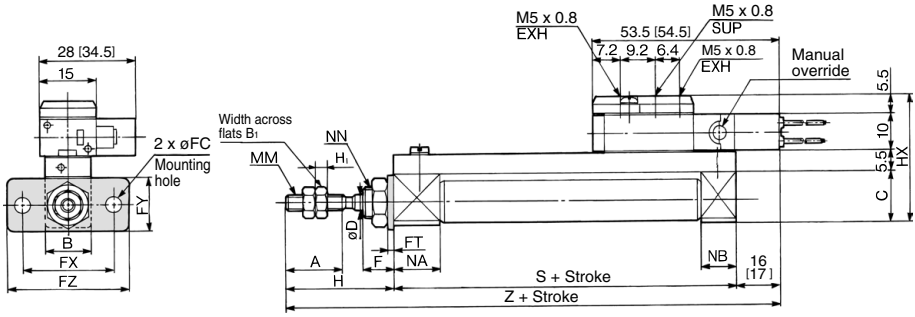

Rod End Nut

Bore size (mm)	B_1	H_1
10	7	3.2
16	8	4

∗[ ]: Denotes the values of AC.

(mm)

Bore size	A	B	C	D	F	FC	FT	FX	FY	FZ	H	HX	MM	NA	NB	NN	S	Z
10	15	12	14	4	8	4.5	1.6	24	14	32	28	35	M4 x 0.7	12.5	9.5	M8 x 1	46	90 [91]
16	15	18	20	5	8	5.5	2.3	33	20	42	28	41	M5 x 0.8	12.5	9.5	M10 x 1	47	91 [92]

Accessory Dimensions

Single Knuckle Joint

(mm)

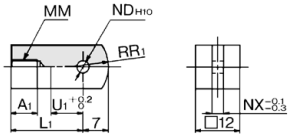

Material: Rolled steel

Part no.	Applicable bore size	A_1	L_1	MM	ND^{H10}	NX	R_1	U_1
I-J010C	**10**	8	21	M4 x 0.7	$3.3^{+0.048}_{0}$	3.1	8	9
I-J016C	**16**	8	25	M5 x 0.8	$5^{+0.048}_{0}$	6.4	12	14

Knuckle Pin

(mm)

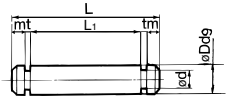

Material: Stainless steel

Part no.	Applicable bore size	Dd9	d	L	L_1	m	t	Applicable retaining ring
IY-J010	**10**	$3.3^{-0.030}_{-0.060}$	3	16.2	12.2	1.7	0.3	Type C 3.2
IY-J015	**16**	$5^{-0.030}_{-0.060}$	4.8	16.6	12.2	1.5	0.7	Type C 5

∗ Retaining rings are included.

Double Knuckle Joint

(mm)

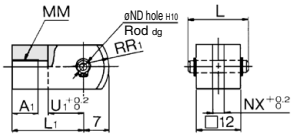

Material: Rolled steel

Part no.	Applicable bore size	A_1	L	L_1	MM	ND_{d9}	ND_{H10}	NX	R_1	U_1
Y-J010C	**10**	8	16.2	21	M4 x 0.7	$3.3^{-0.030}_{-0.060}$	$3.3^{+0.048}_{0}$	3.2	8	10
Y-J016C	**16**	11	16.6	21	M5 x 0.8	$5^{-0.030}_{-0.060}$	$5^{+0.048}_{0}$	6.5	12	10

∗ Knuckle pin and retaining ring are shipped together.

Mounting Nut

(mm)

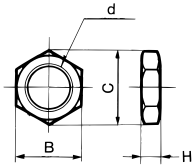

Material: Brass

Part no.	Applicable bore size	B	C	d	H
SNJ-010C	**10**	11	12.7	M8 x 1.0	4
SNJ-016C	**16**	14	16.2	M10 x 1.0	4

Rod End Nut

(mm)

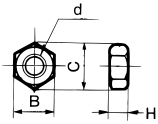

Material: Iron

Part no.	Applicable bore size	B	C	d	H
NTJ-010C	**10**	7	8.1	M4 x 0.7	3.2
NTJ-015C	**16**	8	9.2	M5 x 0.8	4

Auto Switch Mounting 1

Auto Switch Proper Mounting Position (Detection at Stroke End) and Its Mounting Height

Reed auto switch
<Band mounting>

D-A9□

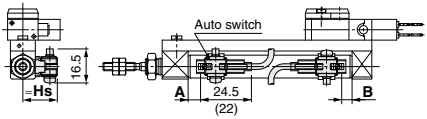

( ): For D-A96 type
A and B are the dimensions from the end of the head cover/rod cover to the end of the auto switch.

D-C7□/C80

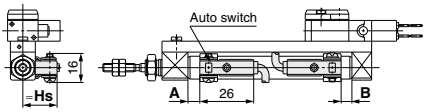

D-C73C□/C80C

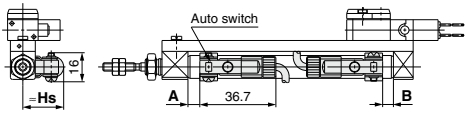

<Rail mounting>

D-A9□

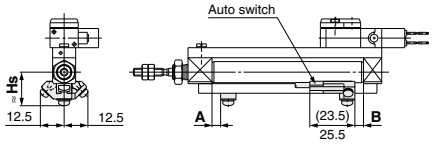

( ): For D-A96 type

D-A9□V

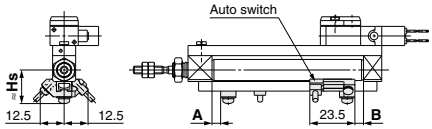

D-A7□/A80

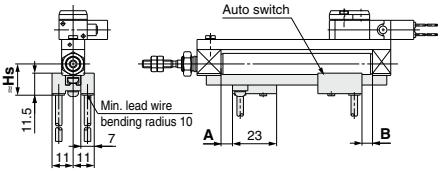

D-A7□H/A80H

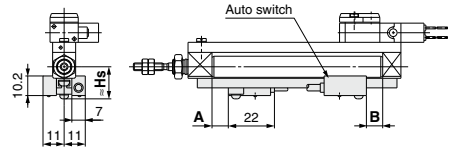

D-A73C/A80C

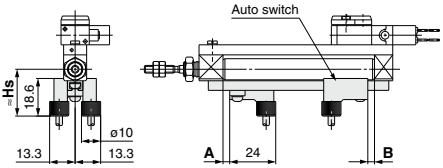

D-A79W

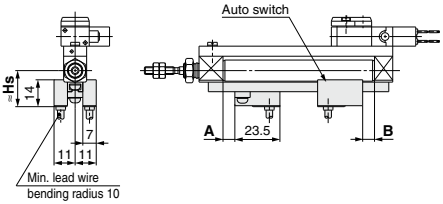

Auto Switch Proper Mounting Position (Detection at Stroke End) and Its Mounting Height

Solid state auto switch
<Band mounting>

D-M9□
D-M9□W

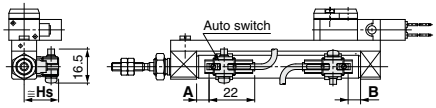

D-H7□
D-H7□W
D-H7NF

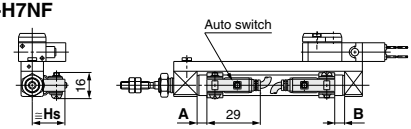

D-H7C

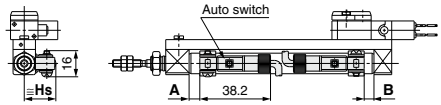

<Rail mounting>

D-M9□
D-M9□W

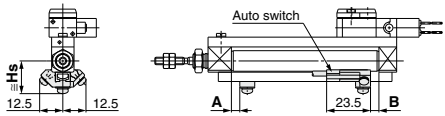

D-M9□V
D-M9□WV

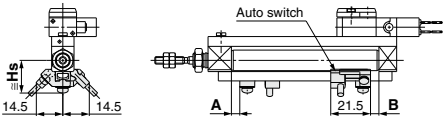

D-F7□/J79
D-F7□W/J79W
D-F79F

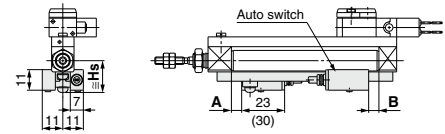

D-F7□V/F7□WV

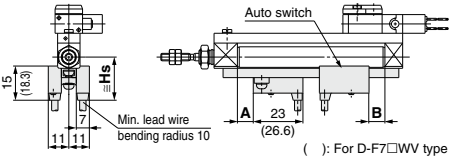

D-J79C

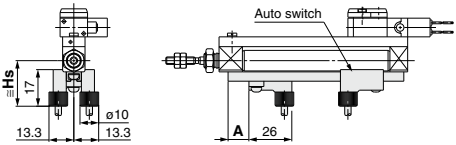

Auto Switch Proper Mounting Position

(mm)

Auto switch model / Bore size (mm)	Band mounting								Rail mounting											
	D-A9□ D-A9□V		D-M9□ D-M9□V D-M9□W D-M9□WV D-M9□A D-M9□AW		D-C7□ D-C80 D-C73C D-C80C		D-H7□ D-H7C D-H7NF D-H7□W		D-A9□ D-A9□V		D-M9□ D-M9□V D-M9□W D-M9□WV D-M9□AV		D-A7□ D-A80		D-A7□H/A80H D-A73C/A80C D-F7□/J79 D-F7□W/J79W D-F7□V/F7□WV D-F79F/J79C		D-F7NT		D-A79W	
	A	B	A	B	A	B	A	B	A	B	A	B	A	B	A	B	A	B	A	B
10	2	2	6	6	2.5	2.5	1.5	1.5	0.5	0.5	4.5	4.5	3	3	3.5	3.5	8.5	8.5	0.5	0.5
16	2.5	2.5	6.5	6.5	3	3	2	2	1	1	4	4	3.5	3.5	4	4	9	9	1	1

Note) Adjust the auto switch after confirming the operating conditions in the actual setting.

Auto Switch Mounting Height

(mm)

Auto switch model / Bore size (mm)	Band mounting					Rail mounting						
	D-A9□ D-M9□ D-M9□W D-M9□A	D-M9□V D-M9□WV D-M9□AV D-A9□V	D-C7□/C80 D-H7□/H7□W D-H7NF	D-C73C D-C80C	D-H7C	D-A9□/A9□V D-M9□/M9□V D-M9□W D-M9□WV	D-A7□ D-A80	D-A7□H/A80H D-F7□/J79 D-F7□W/J79W D-F79F	D-A73C D-A80C	D-F7□V D-F7□WV	D-J79C	D-A79W
	Hs	Hs	Hs	Hs	Hs	Hs	Hs	Hs	Hs	Hs	Hs	Hs
10	17	18	17	19.5	20	17.5	16.5	17.5	23.5	20	23	19
16	20.5	21	20.5	23	23.5	21	19.5	20.5	26.5	23	26	22

Auto Switch Mounting 2

Minimum Auto Switch Mounting Stroke

(mm)

Auto switch mounting	Auto switch model	No. of auto switches mounted				
		1	2		n (n: No. of auto switches)	
			Different surfaces	Same surface	Different surfaces	Same surface
Band mounting	**D-M9□/M9□W** **D-A9□/M9□A**	10	15 Note 1)	45 Note 1)	$15 + 35\frac{(n-2)}{2}$ (n = 2, 4, 6···) Note 4)	45 + 15 (n-2) (n = 2, 3, 4, 5···)
	D-M9□V	5	15 Note 1)	35	$15 + 35\frac{(n-2)}{2}$ (n = 2, 4, 6···) Note 4)	35 + 25 (n-2) (n = 2, 3, 4, 5···)
	D-M9□WV **D-M9□AV**	10	15 Note 1)	35	$15 + 35\frac{(n-2)}{2}$ (n = 2, 4, 6···) Note 4)	35 + 25 (n-2) (n = 2, 3, 4, 5···)
	D-A9□V	5	10	35	$10 + 35\frac{(n-2)}{2}$ (n = 2, 4, 6···) Note 4)	35 + 25 (n-2) (n = 2, 3, 4, 5···)
	D-C7□ **D-C80**	10	15	50	$15 + 40\frac{(n-2)}{2}$ (n = 2, 4, 6···) Note 4)	50 + 20 (n-2) (n = 2, 3, 4, 5···)
	D-H7□ **D-H7□W** **D-H7NF**	10	15	60	$15 + 45\frac{(n-2)}{2}$ (n = 2, 4, 6···) Note 4)	60 + 22.5 (n-2) (n = 2, 3, 4, 5···)
	D-C73C **D-C80C** **D-H7C**	10	15	65 Note 2)	$15 + 50\frac{(n-2)}{2}$ (n = 2, 4, 6···) Note 4)	50 + 27.5 (n-2) (n = 2, 3, 4, 5···)
Rail mounting	**D-M9□V**	5	—	5	—	10 + 10 (n-2) (n = 4, 6···) Note 5)
	D-A9□V	5	—	10	—	10 + 15 (n-2) (n = 4, 6···) Note 5)
	D-M9□ **D-A9□**	10	—	10	—	15 + 15 (n-2) (n = 4, 6···) Note 5)
	D-M9□WV **D-M9□AV**	10	—	15	—	15 + 15 (n-2) (n = 4, 6···) Note 5)
	D-M9□W	15	—	15	—	20 + 15 (n-2) (n = 4, 6···) Note 5)
	D-M9□A	15	—	20	—	20 + 15 (n-2) (n = 4, 6···) Note 5)
	D-A7□/A80 **D-A7□H/A80H** **D-A73C/A80C**	5	—	10	—	15 + 10 (n-2) (n = 4, 6···) Note 5)
	D-A7□H **D-A80H**	5	—	10	—	15 + 15 (n-2) (n = 4, 6···) Note 5)
	D-A79W	10	—	15	—	10 + 15 (n-2) (n = 4, 6···) Note 5)
	D-F7□ **D-J79**	5	—	5	—	15 + 15 (n-2) (n = 4, 6···) Note 5)
	D-F7□V **D-J79C**	5	—	5	—	10 + 10 (n-2) (n = 4, 6···) Note 5)
	D-F7□W/J79W **D-F79F/F7NT**	10	—	15	—	15 + 20 (n-2) (n = 4, 6···) Note 5)
	D-F7□WV	10	—	15	—	10 + 15 (n-2) (n = 4, 6···) Note 5)

Note 4) When "n" is an odd number, an even number that is one larger than this odd number is used for the calculation.
Note 5) When "n" is an odd number, an even number that is one larger than this odd number is used for the calculation. However, the minimum even number is 4. So, 4 is used for the calculation when "n" is 1 to 3.

Note 1) Auto switch mounting (The adjustment as shown in the figures below is required with the following stroke ranges.)

Auto switch model	With 2 auto switches	
	Different surfaces Note 1)	Same surface Note 1)
	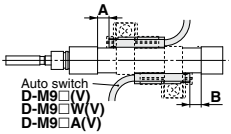 The proper auto switch mounting position is 5.5 mm inward from the switch holder edge.	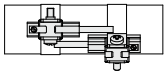 The auto switch is mounted by slightly displacing it in a direction (cylinder tube circumferential exterior) so that the auto switch and lead wire do not interfere with each other.
D-A93	—	45 to less than 50 stroke
D-M9□ **D-M9□W**	15 to less than 20 stroke	45 to less than 55 stroke

Note 2) For the CDVJ5 series, note that 65 strokes cannot be manufactured.
Note 3) The dimension stated in ( ) shows the minimum stroke for the auto switch mounting when the auto switch does not project from the end surface of the cylinder body and hinder the lead wire bending space. (Refer to the figure below.)
These contents apply to the rail mounting with one or two auto switches.

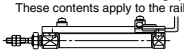

Operating Range

(mm)

	Auto switch model	Bore size	
		10	16
Band mounting	D-A9□(V)	6	7
	D-M9□(V) D-M9□W(V)/M9□A(V)	2.5	3
	D-C7□/C80/C73C/C80C	7	7
	D-H7□/H7□W/H7NF	4	4
	D-H7C	8	9

∗ Since the operating range is provided as a guideline including hysteresis, it cannot be guaranteed (assuming approximately ±30% dispersion). It may vary substantially depending on an ambient environment.

(mm)

	Auto switch model	Bore size	
		10	16
Rail mounting	D-A9□/A9□V	6	6.5
	D-M9□/M9□V D-M9□W/M9□WV D-M9□A/M9□AV	3	3.5
	D-A7□/A80/A7H/A80H/A73C/A80C	8	9
	D-A79W	11	13
	D-F7□/J79/F7□W/J79W D-F7□V/F7□WV/F79F/J79C D-F7NT	5	5

Auto Switch Mounting Bracket: Part No.

Auto switch mounting	Auto switch model	Bore size (mm)	
		ø10	ø16
Band mounting	D-M9□ D-M9□V D-M9□W D-M9□WV D-A9□ D-A9□V	BJ6-010 Note 1)	BJ6-016 Note 1)
	D-M9□A D-M9□AV	BJ6-010S Note 2)	BJ6-016S Note 2)
	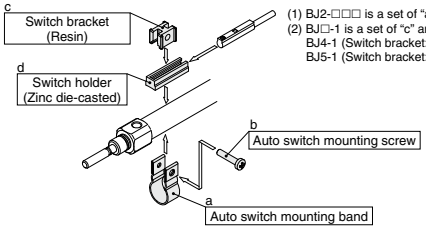		
	D-C7□/C80 D-C73C/C80C D-H7□/H7□W D-H7NF	BJ2-010	BJ2-016
Rail mounting	D-A9□ D-A9□V D-M9□ D-M9□V D-M9□W D-M9□WV D-M9□A D-M9□AV	BQ2-012 Note 5)	BQ2-012 Note 5)
	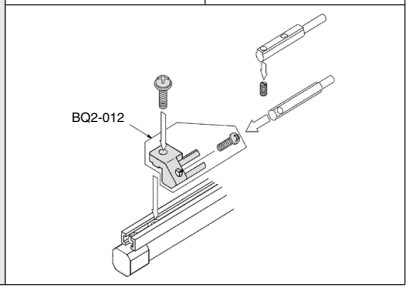		

Note 1) Set part number which includes the auto switch mounting band (BJ2-□□□) and the holder kit (BJ5-1/Switch bracket: Transparent).Since the switch bracket (made from nylon) are affected in an environment where alcohol, chloroform, methylamines, hydrochloric acid or sulfuric acid is splashed over, so it cannot be used. Please consult SMC regarding other chemicals.

Note 2) Set part number which includes the auto switch mounting band (BJ2-□□□S) and the holder kit (BJ4-1/Switch bracket: White).

Note 3) For the D-M9□A (V) type auto switch, do not install the switch bracket on the indicator light.

Note 4) Only auto switch mounting brackets are assembled when cylinders are shipped.

Note 5) When a compact auto switch is mounted on the rail mounting type, the auto switch mounting brackets on the left are required. Order them separately from cylinders.

Example order: CDJ2B10-60-A ····· 1 unit
D-M9BWV ····· 2 pcs.
BQ2-012 ····· 2 pcs.

Besides the models listed in How to Order, the following auto switches are applicable. Refer to pages 1341 to1435 for detailed specifications.

Auto switch type	Part no.	Electrical entry (Fetching direction)	Features
Reed	D-C73, C76	Grommet (In-let)	—
	D-C80		Without indicator light
Solid state	D-H7A1, H7A2, H7B		—
	D-H7NW, H7PW, H7BW		Diagnostic indication (2-color)

∗ For solid state auto switches, auto switches with a pre-wired connector are also available. Refer to pages 1410 and 1411 for details.
∗ Normally closed (NC = b contact) solid state auto switches (D-M9□E(V)) are also available. Refer to page 1360 for details.

Valve Mounted Cylinder
Single Acting, Spring Return/Extend
CVJ3 Series
ø10, ø16

How to Order

Stroke (mm)

ø10	15, 30, 45, 60
ø16	15, 30, 45, 60

Electrical entry

G	Grommet
L	L plug connector
M	M plug connector

Light/Surge voltage suppressor

Nil	Without light/surge voltage suppressor
S	With surge voltage suppressor
Z	With light/surge voltage suppressor
R	With surge voltage suppressor (No polarity)
U	With light/surge voltage suppressor (No polarity)

∗ Type "R", "U": DC only
∗ In the case of AC, since the rectifier prevents the production of surge voltage, there is no type "S".

Mounting type

B	Basic type
L	Axial foot type
F	Rod side flange type

Bore size

10	10 mm
16	16 mm

CVJ3 L 16 – 60 S – 5 L □ – □

With auto switch: CDVJ3 L 16 – 60 S – 5 L □ – M9BW □ – C – □

With auto switch (Built-in magnet)

Action

S	Single acting, Spring return
T	Single acting, Spring extend

Solenoid valve voltage

DC specifications		AC specifications (50/60 Hz)	
5	24 VDC	1	100 VAC
6	12 VDC	2	200 VAC
V	6 VDC	3	110 VAC (115 VAC)
S	5 VDC	4	220 VAC (230 VAC)
R	3 VDC		

Auto switch
Magnet installed even without auto switch

Symbol	Auto switch mounting
A	Rail mounting type
B	Band mounting type

∗ For the applicable auto switch model, refer to the table below.

Auto switch mounting bracket Note)
Note) This symbol is indicated when the D-A9□ or M9□ type auto switch is specified. This mounting bracket does not apply to other auto switches (D-C7□ and H7□, etc.) (Nil)

Number of auto switches

Nil	2 pcs.
S	1 pc.
n	"n" pcs.

Made to Order
Refer to page 1165 for details.

Built-in Magnet Cylinder Model

Suffix the symbol "-B" (Band mounting type) or "-A" (Rail mounting type) to the end of the w/ auto switch cylinder part number.

Example	Band mounting type	CDVJ3B10-45-B
	Rail mounting type	CDVJ3B16-60-A

Applicable Auto Switch
/Refer to pages 1341 to 1435 for further information on auto switches.

Type	Special function	Electrical entry	Indicator light	Wiring (Output)	Load voltage DC	Load voltage AC	Auto switch model: Band mounting Perpendicular	Band mounting In-line	Rail mounting Perpendicular	Rail mounting In-line	Lead wire length (m) 0.5 (Nil)	1 (M)	3 (L)	5 (Z)	None (N)	Pre-wired connector	Applicable load	
Solid state auto switch	—	Grommet	Yes	3-wire (NPN)	5 V, 12 V	—	M9NV	M9N	—	—	●	●	●	○	—	○	IC circuit	Relay, PLC
							—	—	F7NV	F79	●	—	●	○	—	○		
				3-wire (PNP)			M9PV	M9P	—	—	●	●	●	○	—	○		
							—	—	F7PV	F7P	●	—	●	○	—	○		
				2-wire	12 V		M9BV	M9B	—	—	●	●	●	○	—	○	—	
							—	—	F7BV	J79	●	—	●	○	—	○		
		Connector					—	H7C	J79C	—	●	—	●	●	●	—		
	Diagnostic indication (2-color indicator)	Grommet		3-wire (NPN)	24 V 5 V, 12 V		M9NWV	M9NW	—	—	●	●	●	○	—	○	IC circuit	
							—	—	F7NWV	F79W	●	—	●	○	—	○		
				3-wire (PNP)			M9PWV	M9PW	—	—	●	●	●	○	—	○		
							—	—	—	F7PW	●	—	●	○	—	○		
				2-wire	12 V		M9BWV	M9BW	—	—	●	●	●	○	—	○	—	
							—	—	F7BWV	J79W	●	—	●	○	—	○		
	Water resistant (2-color indicator)			3-wire (NPN)	5 V, 12 V		M9NAV∗1	M9NA∗1	—	—	○	○	●	○	—	○	IC circuit	
				3-wire (PNP)			M9PAV∗1	M9PA∗1	—	—	○	○	●	○	—	○		
				2-wire	12 V		M9BAV∗1	M9BA∗1	—	—	○	○	●	○	—	○	—	
	With diagnostic output (2-color indicator)			4-wire (NPN)	5 V, 12 V		—	H7NF	—	F79F	●	—	●	○	—	○	IC circuit	
Reed auto switch	—	Grommet	Yes	3-wire (NPN equivalent)	5 V	—	A96V	A96	—	A76H	●	—	●	—	—	—	IC circuit	—
				2-wire	—	200 V	—	—	A72	A72H	●	—	●	—	—	—	—	Relay, PLC
					24 V 12 V	100 V	A93V∗2	A93	A73	A73H	●	●	●	●	—	—		
			No			100 V or less	A90V	A90	A80	A80H	●	—	●	—	—	—	IC circuit	
		Connector	Yes			—	—	C73C	A73C	—	●	—	●	●	●	—	—	
			No			24 V or less	—	C80C	A80C	—	●	—	●	●	●	—	IC circuit	
	Diagnostic indication (2-color indicator)	Grommet	Yes		—	—	—	—	A79W	—	●	—	●	—	—	—	—	

∗1 Water resistant type auto switches can be mounted on the above models, but in such case SMC cannot guarantee water resistance. Consult with SMC regarding water resistant types with the above model numbers.
∗2 1 m type lead wire is only applicable to D-A93.
∗ Lead wire length symbols: 0.5 m·····Nil (Example) M9NW
1 m····· M (Example) M9NWM
3 m····· L (Example) M9NWL
5 m····· Z (Example) M9NWZ
∗ Solid state auto switches marked with "○" are produced upon receipt of order.
∗ D-A9□/M9□/A7□□/A80□/F7□□/J7□□ auto switches are shipped together (not assembled). (For D-A9□/M9□, only auto switch mounting brackets are assembled before shipped.)
∗ D-C7□□/C80□/H7□□ auto switches are assembled at the time of shipment.
∗ Order auto switch mounting brackets separately when D-A9□(V)/M9□(V)/M9□W(V)/M9□A(V) are mounted on ø10 and ø16 of the rail mounting type. Refer to page 1174 for details.
∗ Since there are other applicable auto switches than listed, refer to page 1174 for details.
∗ For details about auto switches with pre-wired connector, refer to pages 1410 and 1411.

An auto switch cylinder with the switch installed can also be manufactured.

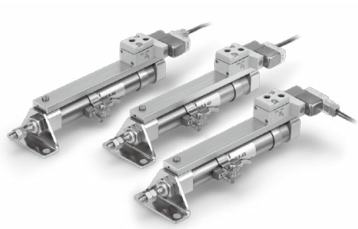

Specifications

Bore size (mm)	ø10	ø16
Action	Single acting, Single rod, Spring return/Spring extend	
Fluid	Air	
Proof pressure	1.05 MPa	
Maximum operating pressure	0.7 MPa	
Minimum operating pressure	0.15 MPa	
Ambient and fluid temperature	–10 to 50°C (No freezing)	
Cushion	Rubber bumper	
Lubrication	Not required (Non-lube)	
Stroke length tolerance	$^{+1.0}_{0}$	
Port size	M5 x 0.8	
Mounting	Basic type, Axial foot type, Rod side flange type	
Piston speed	50 to 750 mm/s	50 to 350 mm/s
Allowable kinetic energy	0.035 J	0.090 J

Symbol

Single acting:
Spring return, Rubber bumper

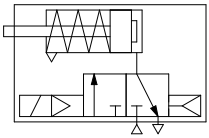

Single acting:
Spring extend, Rubber bumper

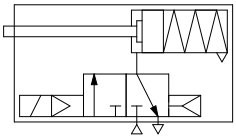

Solenoid Valve Specifications

Applicable solenoid valve model			SYJ319
Electrical entry			Grommet (G), L plug connector (L), M plug connector (M)
Coil rated voltage (V)	**DC**		24, 12, 6, 5, 3
	AC 50/60 Hz		100, 110, 200, 220
Effective area of valve (Cv factor)			1.8 mm² (0.1)
Allowable voltage			±10% of the rated voltage*
Power consumption (W)	**DC**	**Standard**	0.35 (With indicator light: 0.4)
Apparent power (VA)*	**AC**	**100 V**	0.78 (With indicator light: 0.81)
		110 V [115 V]	0.86 (With indicator light: 0.89) [0.94 (With indicator light: 0.97)]
		200 V	1.18 (With indicator light: 1.22)
		220 V [230 V]	1.30 (With indicator light: 1.34) [1.42 (With indicator light: 1.46)]
Surge voltage suppressor			Diode (Varistor for the non-polar type)
Indicator light			LED

∗ 110 VAC and 115 VAC types and 220 VAC and 230 VAC types are common respectively.
∗ For 115 VAC and 230 VAC, allowable voltage fluctuation is –15 to +5 % of the rated voltage.
∗ For S and Z, the voltage will drop due to the internal circuit. Allowable voltage fluctuation must be in the range below.
Types S, Z 24 VDC: –7 to 10 %, 12 VDC: –4 to 10 %

Made to Order Specifications

Click here for details

Symbol	Specifications
-XA□	Change of rod end shape

Standard Stroke

(mm)

Bore size (mm)	Standard stroke
10	15, 30, 45, 60
16	15, 30, 45, 60

Spring Back Force

(N)

Bore size (mm)	Spring reaction force	
	Secondary	Primary
10	6.9	3.5
16	14.2	6.9

Mounting Type and Accessory/For details, refer to page 1159.

	Mounting	Basic type	Axial foot type	Rod side flange type
Standard equipment	Mounting nut	●	●	●
	Rod end nut	●	●	●
Option	Single knuckle joint	○	○	○
	Double knuckle joint (With pin)*	○	○	○

* Knuckle pin and retaining ring are shipped together.

●···Supplied with the product.
○···Please order separately.

Accessory

Accessories of the CVJ3 series are the same specifications as those of the CVJ5 series. Refer to page 1159.

Mounting Bracket Part No.

Mounting bracket	Bore size (mm)	
	10	16
Foot	CJ-L010C	CJ-L016C
Flange	CJ-F010C	CJ-F016C

Accessory (Option)

Refer to page 1159 for part numbers and dimensions of the single knuckle joint, double knuckle joint, knuckle pin, mounting nut, and rod end nut.

Weight

Spring Return

(g)

Bore size (mm)		10	16
Basic weight*	15 stroke	79	116
	30 stroke	87	135
	45 stroke	97	159
	60 stroke	109	184
Mounting bracket weight	Axial foot type	7	19
	Rod side flange type	5	13

* Mounting nut and rod end nut are included in the basic weight.
Calculation: (Example) **CVJ3L10-45S**
- Basic weight ····· 97 (g) (ø10-45 stroke)
- Mounting bracket weight ····· 7 (g) (Axial foot type)

97 + 7 = 104 g

Spring Extend

(g)

Bore size (mm)		10	16
Basic weight*	15 Stroke	75	111
	30 Stroke	82	129
	45 Stroke	93	151
	60 Stroke	103	175
Mounting bracket weight	Axial foot type	7	19
	Rod side flange type	5	13

* Mounting nut and rod end nut are included in the basic weight.
Calculation: (Example) **CVJ3L10-45T**
- Basic weight ····· 93 (g) (ø10-45 stroke)
- Mounting bracket weight ····· 7 (g) (Axial foot type)

93 + 7 = 100 g

Manual Operation

Manual operation is possible by pushing the manual button indicated with the arrow.

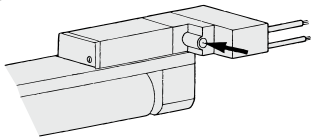

⚠ Specific Product Precautions

Be sure to read this before handling the products. Refer to page 9 for safety instructions, pages 10 to 19 for actuator and auto switch precautions, and 3/4/5-port solenoid valve precautions on the SMC website: https://www.smcworld.com

Handling Precautions

⚠Caution

1. **During installation, secure the rod cover and tighten the mounting nut or the rod cover body by applying an appropriate tightening force.**
   If the head cover is secured or the head cover is tightened, the cover may rotate, leading to the deviation.
2. **Tighten the mounting screws with an appropriate tightening torque within the range given below.**
   ø6: 2.1 to 2.5 N·m, ø10: 5.9 to 6.4 N·m
   ø16: 10.8 to 11.8 N·m
3. **Do not operate the single acting cylinder in such a way that a load would be applied when retracting the piston rod of the spring return type or extending the piston rod of the spring extend type.**
   The spring that is built into the cylinder provides only enough force to retract the piston rod. If a load is applied, the piston rod will not be able to retract to the stroke end.
4. **For the single acting cylinder, a breather hole is provided in the cover surface. Do not block this hole during installation.**
   This may cause malfunction.
5. **To remove and install the retaining ring for the knuckle pin or the clevis pin, use an appropriate pair of pliers (tool for installing a type C retaining ring).**
   In particular, use a pair of ultra-mini pliers for removing and installing the retaining rings on the ø10 cylinder.
6. **For the auto switch mounting rail, do not remove the pre-equipped rail.**
   Since the mounting thread is drilled through inside the cylinder, it may cause air leakage.

⚠Warning

1. **Confirm the specifications.**
   Products in this catalog are designed to be used for compressed air systems. If not operated within the designated pressure or temperature, it may damage the products or cause malfunction. (Refer to specifications.)
2. **Energizing continuously for a long period of time**
   When the valve is continuously energized for a long period of time, the performance may deteriorate, shorten the service life or effect peripheral equipment adversely since temperature rises when coils generate heat.

Construction/Component Parts

Single acting, Spring return

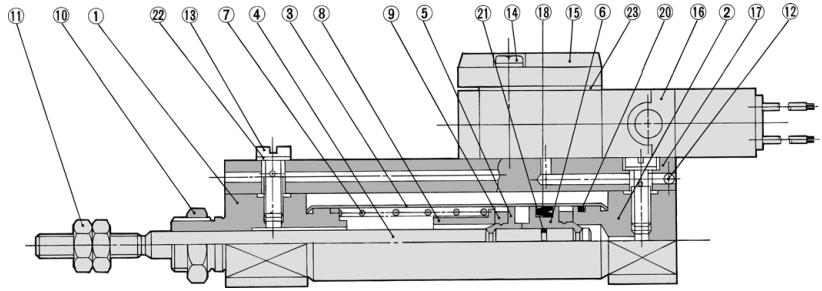

Single acting, Spring extend

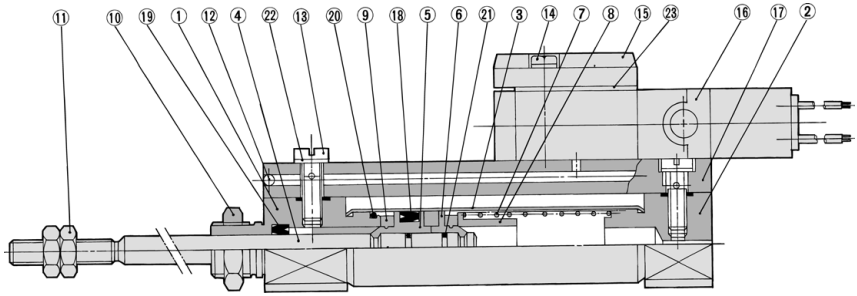

Component Parts

No.	Description	Material	Note
1	**Rod cover**	Aluminum alloy	Clear anodized
2	**Head cover**	Aluminum alloy	Clear anodized
3	**Cylinder tube**	Stainless steel	
4	**Piston rod**	Stainless steel	
5	**Piston A**	Aluminum alloy	Chromated
6	**Piston B**	Aluminum alloy	Chromated
7	**Return spring**	Piano wire	
8	**Spring seat**	Brass	
9	**Bumper**	Urethane	
10	**Mounting nut**	Brass	Nickel plated
11	**Rod end nut**	Rolled steel	Zinc chromated
12	**Steel ball**	Carbon steel	

No.	Description	Material	Note
13	**Stud**	Brass	Electroless nickel plated
14	**Phillips screw**	Rolled steel	Nickel plated
15	**Plate**	Zinc alloy	
16	**Solenoid valve**	—	Refer to "How to Order" below.*
17	**Pipe**	Aluminum alloy	Clear anodized
18	**Piston seal**	NBR	
19	**Rod seal**	NBR	
20	**Tube gasket**	NBR	
21	**Piston gasket**	NBR	
22	**Gasket**	NBR + Stainless steel 304	
23	**Plate gasket**	NBR	

* How to Order solenoid valves

SYJ319 – □□□

Rated voltage • • Light/surge voltage suppressor

• Electrical entry

Single Acting, Spring Return/Basic Type (B)

CVJ3B Bore size – Stroke S

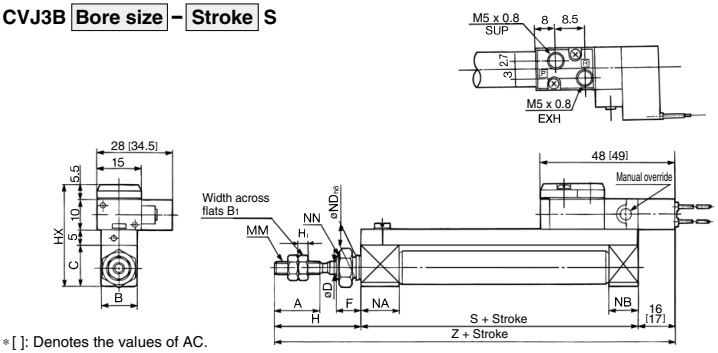

Rod End Nut

Bore size (mm)	B_1	H_1
10	7	3.2
16	8	4

∗[ ]: Denotes the values of AC.

(mm)

Bore size	A	B	C	D	F	H	HX	MM	NA	NB	ND	NN	5 to 15 st		16 to 30 st		31 to 45 st		46 to 60 st	
													S	Z	S	Z	S	Z	S	Z
10	15	12	14	4	8	28	34.5	M4 x 0.7	12.5	9.5	$8^{\ 0}_{-0.022}$	M8 x 1	52.5	96.5 [97.5]	60	104 [105]	72	116 [117]	84	128 [129]
16	15	18	20	5	8	28	40.5	M5 x 0.8	12.5	9.5	$10^{\ 0}_{-0.022}$	M10 x 1	52.5	96.5 [97.5]	61	105 [106]	73	117 [118]	85	129 [130]

Single Acting, Spring Return/Axial Foot Type (L)

CVJ3L Bore size – Stroke S

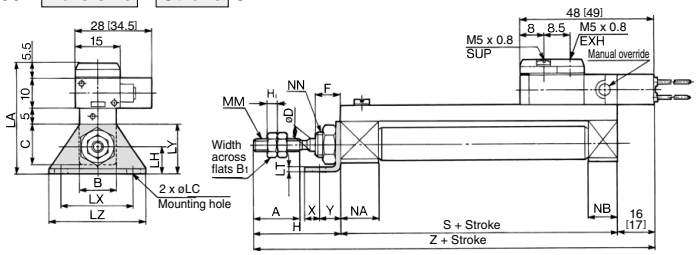

Rod End Nut

Bore size (mm)	B_1	H_1
10	7	3.2
16	8	4

∗[ ]: Denotes the values of AC.

(mm)

Bore size	A	B	C	D	F	H	LA	LB	LC	LH	LT	LX	LY	LZ	MM	NA	NB	NN	X	Y	5 to 15 st		16 to 30 st		31 to 45 st		46 to 60 st	
																					S	Z	S	Z	S	Z	S	Z
10	15	12	14	4	8	28	37.5	15	4.5	9	1.6	24	16.5	32	M4 x 0.7	12.5	9.5	M8 x 1	5	7	52.5	96.5 [97.5]	60	104 [105]	72	116 [117]	84	128 [129]
16	15	18	20	5	8	28	45.5	23	5.5	14	2.3	33	25	42	M5 x 0.8	12.5	9.5	M10 x 1	6	9	52.5	96.5 [97.5]	61	105 [106]	73	117 [118]	85	129 [130]

Single Acting, Spring Return/Rod Side Flange Type (F)

CVJ3F Bore size – Stroke S

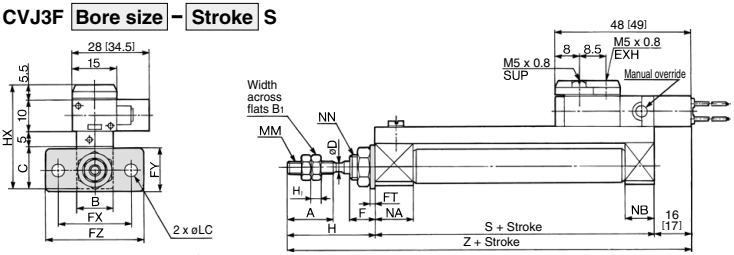

Rod End Nut

Bore size (mm)	B_1	H_1
10	7	3.2
16	8	4

∗[ ]: Denotes the values of AC.

(mm)

Bore size	A	B	C	D	F	FC	FT	FX	FY	FZ	H	HX	MM	NA	NB	NN	5 to 15 st		16 to 30 st		31 to 45 st		46 to 60 st	
																	S	Z	S	Z	S	Z	S	Z
10	15	12	14	4	8	4.5	1.6	24	14	32	28	34.5	M4 x 0.7	12.5	9.5	M8 x 1	52.5	96.5 [97.5]	60	104 [105]	72	116 [117]	84	128 [129]
16	15	18	20	5	8	5.5	2.3	33	20	42	28	40.5	M5 x 0.8	12.5	9.5	M10 x 1	52.5	96.5 [97.5]	61	105 [106]	73	117 [118]	85	129 [130]

Single Acting, Spring Extend/Basic Type (B)

CVJ3B Bore size – Stroke T

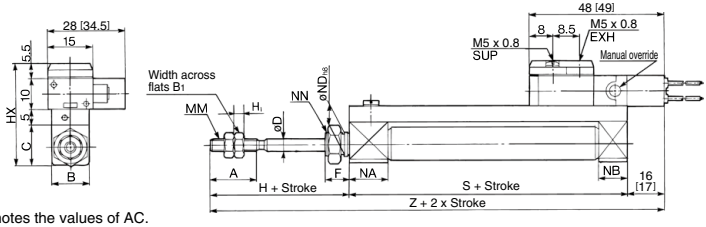

Rod End Nut

Bore size (mm)	B1	H1
10	7	3.2
16	8	4

∗ [ ]: Denotes the values of AC.

(mm)

Bore size	A	B	C	D	F	H	HX	MM	NA	NB	ND	NN	5 to 15 st		16 to 30 st		31 to 45 st		46 to 60 st	
													S	Z	S	Z	S	Z	S	Z
10	15	12	14	4	8	28	34.5	M4 x 0.7	12.5	9.5	$8^{0}_{-0.022}$	M8 x 1	52.5	96.5 [97.5]	60	104 [105]	72	116 [117]	84	128 [129]
16	15	18	20	5	8	28	40.5	M5 x 0.8	12.5	9.5	$10^{0}_{-0.022}$	M10 x 1	52.5	96.5 [97.5]	61	105 [106]	73	117 [118]	85	129 [130]

Single Acting, Spring Extend/Axial Foot Type (L)

CVJ3L Bore size – Stroke T

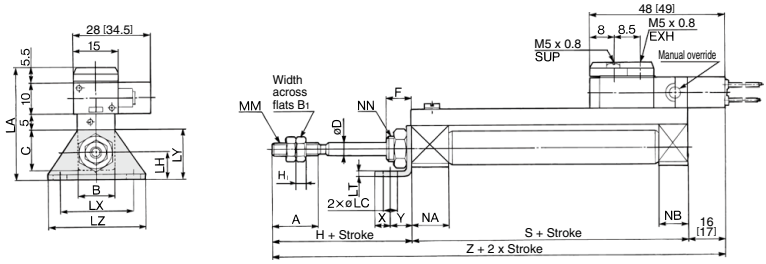

Rod End Nut

Bore size (mm)	B1	H1
10	7	3.2
16	8	4

∗ [ ]: Denotes the values of AC.

(mm)

Bore size	A	B	C	D	F	H	LA	LB	LC	LH	LT	LX	LY	LZ	MM	NA	NB	NN	X	Y	5 to 15 st		16 to 30 st		31 to 45 st		46 to 60 st	
																					S	Z	S	Z	S	Z	S	Z
10	15	12	14	4	8	28	37.5	15	4.5	9	1.6	24	16.5	32	M4 x 0.7	12.5	9.5	M8 x 1	5	7	52.5	96.5 [97.5]	60	104 [105]	72	116 [117]	84	128 [129]
16	15	18	20	5	8	28	45.5	23	5.5	14	2.3	33	25	42	M5 x 0.8	12.5	9.5	M10 x 1	6	9	52.5	96.5 [97.5]	61	105 [106]	73	117 [118]	85	129 [130]

Single Acting, Spring Extend/Rod Side Flange Type (F)

CVJ3F Bore size – Stroke T

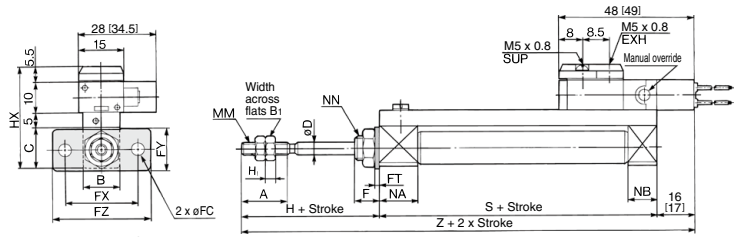

Rod End Nut

Bore size (mm)	B1	H1
10	7	3.2
16	8	4

∗ [ ]: Denotes the values of AC.

(mm)

Bore size	A	B	C	D	F	FC	FT	FX	FY	FZ	H	HX	MM	NA	NB	NN	5 to 15 st		16 to 30 st		31 to 45 st		46 to 60 st	
																	S	Z	S	Z	S	Z	S	Z
10	15	12	14	4	8	4.5	1.6	24	14	32	28	34.5	M4 x 0.7	12.5	9.5	M8 x 1	52.5	96.5 [97.5]	60	104 [105]	72	116 [117]	84	128 [129]
16	15	18	20	5	8	5.5	2.3	33	20	42	28	40.5	M5 x 0.8	12.5	9.5	M10 x 1	52.5	96.5 [97.5]	61	105 [106]	73	117 [118]	85	129 [130]

Auto Switch Mounting 1

Auto Switch Proper Mounting Position (Detection at Stroke End) and Its Mounting Height

Reed auto switch
<Band mounting>

D-A9□

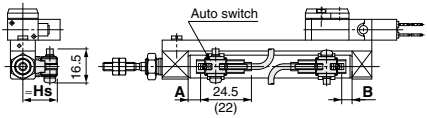

( ): For D-A96 type
A and B are the dimensions from the end of the head cover/rod cover to the end of the auto switch.

D-C7□/C80

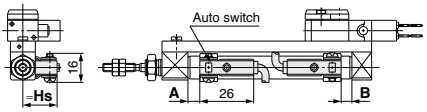

D-C73C□/C80C

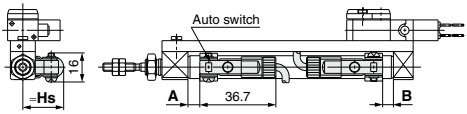

<Rail mounting>

D-A9□

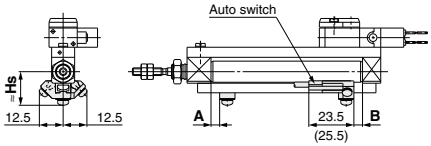

( ): For D-A93 type

D-A9□V

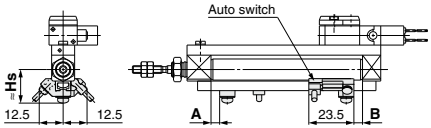

D-A7□/A80

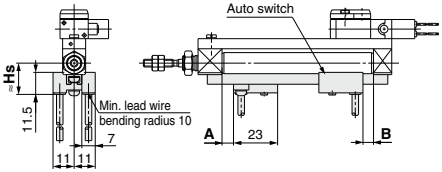

D-A7□H/A80H

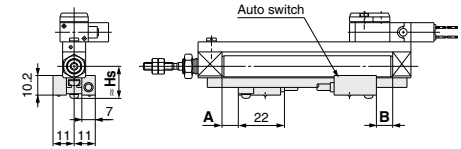

D-A73C/A80C

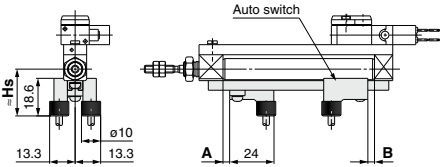

D-A79W

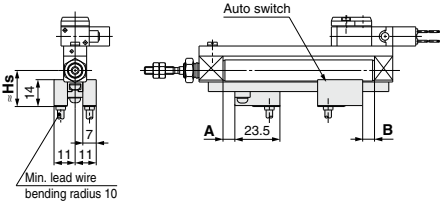

Auto Switch Proper Mounting Position (Detection at Stroke End) and Its Mounting Height

Solid state auto switch
<Band mounting>
D-M9□
D-M9□W

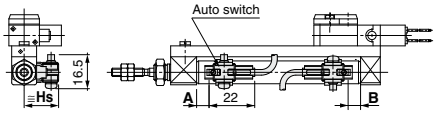

D-H7□
D-H7□W

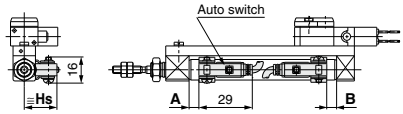

D-H7C

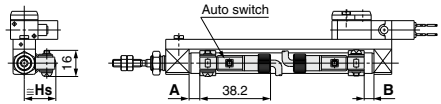

<Rail mounting>
D-M9□
D-M9□W

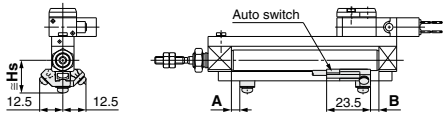

D-M9□V
D-M9□WV

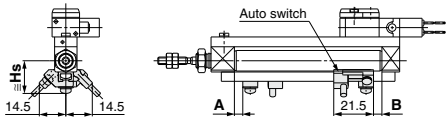

D-F7□/J79
D-F7□W/J79W
D-F79F

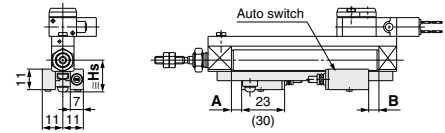

D-F7□V/F7□WV

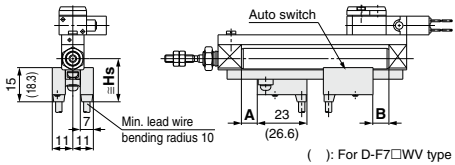

D-J79C

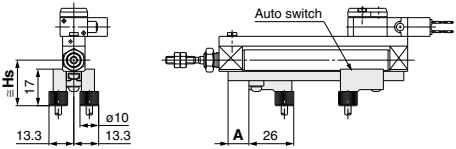

Auto Switch Mounting 2

Auto Switch Proper Mounting Position (Detection at Stroke End) and Its Mounting Height: Single Acting, Spring Return (S) / Spring Extend (T)

Auto Switch Proper Mounting Position / Spring Return (S)

(mm)

	Auto switch model	Bore size (mm)	Dimension A				B
			10 to 15st	16 to 30st	31 to 45st	46 to 60st	
Band mounting	D-A9□(V)	10	8.5	16	28	40	2
		16	8	16.5	28.5	40.5	2.5
	D-M9□(V) D-M9□W(V) D-M9□A(V)	10	12.5	20	32	44	6
		16	12	20.5	32.5	44.5	6.5
	D-C7□/C80 D-C73C/C80C	10	9	16.5	28.5	40.5	2.5
		16	8.5	17	29	41	3
	D-H7□/H7C D-H7□W D-H7NF	10	8	15.5	27.5	39.5	1.5
		16	7.5	16	28	40	2
Rail mounting	D-A9□ D-A9□V	10	7	14.5	26.5	38.5	0.5
		16	6.5	15	27	39	1
	D-M9□/M9□V D-M9□W/M9□WV	10	11	18.5	30.5	42.5	4.5
		16	10.5	19	31	43	5
	D-A7□ D-A80	10	9.5	17	29	41	3
		16	9	17.5	29.5	41.5	3.5
	D-A7□H/A80H D-A73C/A80C D-F7□/J79 D-F7□W/J79W D-F7□V/F7□WV D-F79F/J79C	10	10	17.5	29.5	41.5	3.5
		16	9.5	18	30	42	4
	D-F7NT	10	15	22.5	34.5	46.5	8.5
		16	14.5	23	35	47	9
	D-A79W	10	7	14.5	26.5	38.5	0.5
		16	6.5	15	27	39	1

Note) Adjust the auto switch after confirming the operating conditions in the actual setting.

Auto Switch Proper Mounting Position / Spring Extend (T)

(mm)

	Auto switch model	Bore size (mm)	A	Dimension B			
				10 to 15st	16 to 30st	31 to 45st	46 to 60st
Band mounting	D-A9□(V)	10	2	8.5	16	28	40
		16	2.5	8	16.5	28.5	40.5
	D-M9□(V) D-M9□W(V) D-M9□A(V)	10	6	12.5	20	32	44
		16	6.5	12	20.5	32.5	44.5
	D-C7□/C80 D-C73C/C80C	10	2.5	9	16.5	28.5	40.5
		16	3	8.5	17	29	41
	D-H7□/H7C D-H7□W D-H7NF	10	1.5	8	15.5	27.5	39.5
		16	2	7.5	16	28	40
Rail mounting	D-A9□ D-A9□V	10	0.5	7	14.5	16.5	38.5
		16	1	6.5	15	27	39
	D-M9□/M9□V D-M9□W/M9□WV	10	4.5	11	18.5	30.5	42.5
		16	5	10.5	19	31	43
	D-A7□ D-A80	10	3	9.5	17	29	41
		16	3.5	9	17.5	29.5	41.5
	D-A7□H/A80H D-A73C/A80C D-F7□/J79 D-F7□W/J79W D-F7□V/F7□WV D-F79F/J79C	10	3.5	10	17.5	29.5	41.5
		16	4	9.5	18	30	42
	D-F7NT	10	8.5	15	22.5	34.5	46.5
		16	9	14.5	23	35	47
	D-A79W	10	0.5	7	14.5	26.5	38.5
		16	1	6.5	15	27	39

Note) Adjust the auto switch after confirming the operating conditions in the actual setting.

Auto Switch Mounting Height

(mm)

Auto switch model / Bore size (mm)	Band mounting					Rail mounting						
	D-A9□ D-M9□ D-M9□W D-M9□A	D-M9□V D-M9□WV D-M9□AV D-A9□V	D-C7□/C80 D-H7□ D-H7□W D-H7NF	D-C73C D-C80C	D-H7C	D-A9□/A9□V D-M9□ D-M9□V D-M9□W D-M9□WV	D-A7□ D-A80	D-A7□H/A80H D-F7□/J79 D-F7□W/J79W D-F79F D-F7NT	D-A73C D-A80C	D-F7□V D-F7□WV	D-J79C	D-A79W
	Hs	Hs	Hs	Hs	Hs	Hs	Hs	Hs	Hs	Hs	Hs	Hs
10	17	18	17	19.5	20	17.5	16.5	17.5	23.5	20	23	19
16	20.5	21	20.5	23	23.5	21	19.5	20.5	26.5	23	26	22

Minimum Auto Switch Mounting Stroke

(mm)

Auto switch mounting	Auto switch model	No. of auto switches mounted				
		1	2		n (n: No. of auto switches)	
			Different surfaces	Same surface	Different surfaces	Same surface
Band mounting	**D-M9□/M9□W** **D-A9□/M9□A**	10	15 Note 1)	45 Note 1)	$15 + 35\frac{(n-2)}{2}$ (n = 2, 4, 6···) Note 4)	45 + 15 (n-2) (n = 2, 3, 4, 5···)
	D-M9□V	5	15 Note 1)	35	$15 + 35\frac{(n-2)}{2}$ (n = 2, 4, 6···) Note 4)	35 + 25 (n-2) (n = 2, 3, 4, 5···)
	D-M9□WV **D-M9□AV**	10	15 Note 1)	35	$15 + 35\frac{(n-2)}{2}$ (n = 2, 4, 6···) Note 4)	35 + 25 (n-2) (n = 2, 3, 4, 5···)
	D-A9□V	5	10	35	$10 + 35\frac{(n-2)}{2}$ (n = 2, 4, 6···) Note 4)	35 + 25 (n-2) (n = 2, 3, 4, 5···)
	D-C7□ **D-C80**	10	15	50	$15 + 40\frac{(n-2)}{2}$ (n = 2, 4, 6···) Note 4)	50 + 20 (n-2) (n = 2, 3, 4, 5···)
	D-H7□ **D-H7□W** **D-H7NF**	10	15	60	$15 + 45\frac{(n-2)}{2}$ (n = 2, 4, 6···) Note 4)	60 + 22.5 (n-2) (n = 2, 3, 4, 5···)
	D-C73C **D-C80C** **D-H7C**	10	15	65 Note 2)	$15 + 50\frac{(n-2)}{2}$ (n = 2, 4, 6···) Note 4)	50 + 27.5 (n-2) (n = 2, 3, 4, 5···)
Rail mounting	**D-M9□V**	5	—	5	—	10 + 10 (n-2) (n = 4, 6···) Note 5)
	D-A9□V	5	—	10	—	10 + 15 (n-2) (n = 4, 6···) Note 5)
	D-M9□ **D-A9□**	10	—	10	—	15 + 15 (n-2) (n = 4, 6···) Note 5)
	D-M9□WV **D-M9□AV**	10	—	15	—	15 + 15 (n-2) (n = 4, 6···) Note 5)
	D-M9□W	15	—	15	—	20 + 15 (n-2) (n = 4, 6···) Note 5)
	D-M9□A	15	—	20	—	20 + 15 (n-2) (n = 4, 6···) Note 5)
	D-A7□/A80 **D-A7□H/A80H** **D-A73C/A80C**	5	—	10	—	15 + 10 (n-2) (n = 4, 6···) Note 5)
	D-A7□H **D-A80H**	5	—	10	—	15 + 15 (n-2) (n = 4, 6···) Note 5)
	D-A79W	10	—	15	—	10 + 15 (n-2) (n = 4, 6···) Note 5)
	D-F7□ **D-J79**	5	—	5	—	15 + 15 (n-2) (n = 4, 6···) Note 5)
	D-F7□V **D-J79C**	5	—	5	—	10 + 10 (n-2) (n = 4, 6···) Note 5)
	D-F7□W/J79W **D-F79F/F7NT**	10	—	15	—	15 + 20 (n-2) (n = 4, 6···) Note 5)
	D-F7□WV	10	—	15	—	10 + 15 (n-2) (n = 4, 6···) Note 5)

Note 4) When "n" is an odd number, an even number that is one larger than this odd number is used for the calculation.
Note 5) When "n" is an odd number, an even number that is one larger than this odd number is used for the calculation.
However, the minimum even number is 4. So, 4 is used for the calculation when "n" is 1 to 3.

Note 1) Auto switch mounting (The adjustment as shown in the figures below is required with the following stroke ranges.)

Auto switch model	With 2 auto switches	
	Different surfaces Note 1)	Same surface Note 1)
	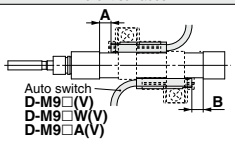 The proper auto switch mounting position is 5.5 mm inward from the switch holder edge.	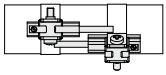 The auto switch is mounted by slightly displacing it in a direction (cylinder tube circumferential exterior) so that the auto switch and lead wire do not interfere with each other.
D-A93	—	45 to less than 50 stroke
D-M9□ **D-M9□W**	15 to less than 20 stroke	45 to less than 55 stroke

Note 2) For the CDVJ3 series, note that 65 strokes cannot be manufactured.
Note 3) The dimension stated in ( ) shows the minimum stroke for the auto switch mounting when the auto switch does not project from the end surface of the cylinder body and hinder the lead wire bending space. (Refer to the figure below.)
These contents apply to the rail mounting with one or two auto switches.

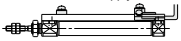

Auto Switch Mounting 3

Operating Range

(mm)

	Auto switch model	Bore size	
		10	16
Band mounting	**D-A9□(V)**	6	7
	D-M9□(V) **D-M9□W(V)/M9□A(V)**	2.5	3
	D-C7□/C80/C73C/C80C	7	7
	D-H7□/H7□W/H7NF	4	4
	D-H7C	8	9

∗ Since the operating range is provided as a guideline including hysteresis, it cannot be guaranteed (assuming approximately ±30% dispersion). It may vary substantially depending on an ambient environment.

(mm)

	Auto switch model	Bore size	
		10	16
Rail mounting	**D-A9□/A9□V**	6	6.5
	D-M9□/M9□V **D-M9□W/M9□WV** **D-M9□A/M9□AV**	3	3.5
	D-A7□/A80/A7H/A80H/A73C/A80C	8	9
	D-A79W	11	13
	D-F7□/J79/F7□W/J79W **D-F7□V/F7□WV/F79F/J79C** **D-F7NT**	5	5

Auto Switch Mounting Bracket: Part No.

Auto switch mounting	Auto switch model	Bore size (mm)	
		ø10	ø16
Band mounting	**D-M9□** **D-M9□V** **D-M9□W** **D-M9□WV** **D-A9□** **D-A9□V**	BJ6-010 Note 1)	BJ6-016 Note 1)
	D-M9□A **D-M9□AV**	BJ6-010S Note 2)	BJ6-016S Note 2)
	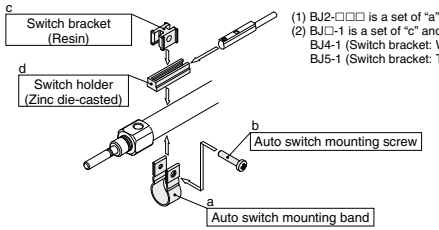 (1) BJ2-□□□ is a set of "a" and "b". (2) BJ□-1 is a set of "c" and "d". BJ4-1 (Switch bracket: White) BJ5-1 (Switch bracket: Transparent)		
	D-C7□/C80 **D-C73C/C80C** **D-H7□/H7□W** **D-H7NF**	BJ2-010	BJ2-016
Rail mounting	**D-A9□** **D-A9□V** **D-M9□** **D-M9□V** **D-M9□W** **D-M9□WV** **D-M9□A** **D-M9□AV**	BQ2-012 Note 5)	BQ2-012 Note 5)
	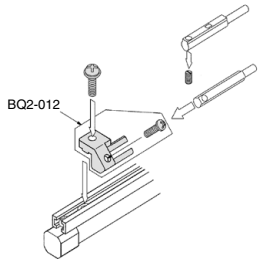		

Note 1) Set part number which includes the auto switch mounting band (BJ2-□□□) and the holder kit (BJ5-1/Switch bracket: Transparent).Since the switch bracket (made from nylon) are affected in an environment where alcohol, chloroform, methylamines, hydrochloric acid or sulfuric acid is splashed over, so it cannot be used. Please consult SMC regarding other chemicals.

Note 2) Set part number which includes the auto switch mounting band (BJ2-□□□S) and the holder kit (BJ4-1/Switch bracket: White).

Note 3) For the D-M9□A (V) type auto switch, do not install the switch bracket on the indicator light.

Note 4) Only auto switches are assembled when cylinders are shipped.

Note 5) When a compact auto switch is mounted on the rail mounting type, the auto switch mounting brackets on the left are required. Order them separately from cylinders.

Example order: CDJ2B10-60-A ····· 1 unit
D-M9BWV ····· 2 pcs.
BQ2-012 ····· 2 pcs.

Besides the models listed in How to Order, the following auto switches are applicable. Refer to pages 1341 to 1435 for detailed specifications.

Auto switch type	Part no.	Electrical entry (Fetching direction)	Features
Reed	D-C73, C76	Grommet (In-let)	—
	D-C80		Without indicator light
Solid state	D-H7A1, H7A2, H7B		—
	D-H7NW, H7PW, H7BW		Diagnostic indication (2-color)

∗ For solid state auto switches, auto switches with a pre-wired connector are also available. Refer to pages 1410 and 1411 for details.
∗ Normally closed (NC = b contact) solid state auto switches (D-M9□E(V)) are also available. Refer to page 1360 for details.

Valve Mounted Cylinder
Double Acting, Single Rod
CVM5 Series
ø20, ø25, ø32, ø40

How to Order

Bore size

20	20 mm
25	25 mm
32	32 mm
40	40 mm

Mounting type

B	Basic type
L	Axial foot type
F	Rod side flange type
G	Head side flange type
C	Single clevis type
D	Double clevis type
T	Head side trunnion type
U	Rod side trunnion type

Rated voltage

DC

5	24 VDC
6	12 VDC
V	6 VDC
S	5 VDC
R	3 VDC

AC (50/60 Hz)

1	100 VAC
2	200 VAC
3	110 VAC [115 VAC]
4	220 VAC [230 VAC]

∗ For the DC specification DIN terminal, only 24 and 12 VDC are available.

Type of actuation

1	2 position single
2	2 position double
3	3 position closed center
4	3 position exhaust center

Electrical entry

G	Grommet
L	L plug connector
M	M plug connector
D	DIN terminal

Light/Surge voltage suppressor

Electrical entry for G, L, M

Nil	Without light/surge voltage suppressor
S	With surge voltage suppressor
Z	With light/surge voltage suppressor
R	With surge voltage suppressor (Non-polar type)
U	With light/surge voltage suppressor (Non-polar type)

∗ For AC voltage valves there is no "S" option. It is already built-in to the rectifier circuit.
∗ For type "R" and "U", DC voltage is only available.

Electrical entry for D

Nil	Without light/surge voltage suppressor
S	With surge voltage suppressor (Non-polar type)
Z	With light/surge voltage suppressor (Non-polar type)

∗ For AC voltage valves there is no "S" option. It is already built-in to the rectifier circuit.

Manual override

Nil	Non-locking push type
D	Push-turn locking slotted type
E	Push-turn locking lever type

Made to Order
Refer to page 1176 for details.

CVM5 L 32 □ □ 100 □ □ – 1 1 G Z □ – □

With auto switch CDVM5 L 32 □ □ – 100 □ □ – 1 1 G Z □ – M9BW □ – C – □

With auto switch
(Built-in magnet)

Port thread type

Nil	Rc
TN	NPT
TF	G

Piping

Nil	Screw-in type
F	Built-in One-touch fitting

Rod extended/retracted when energized

Nil	Rod extended when energized
B	Rod retracted when energized

∗ Only in case of 2 position single solenoid valve.

Cylinder stroke (mm)
(Refer to "Standard Stroke" on page 1176.)

Suffix for cylinder

Nil	None
J	Nylon tarpaulin
K	Heat resistant tarpaulin

Built-in Magnet Cylinder Model
If a built-in magnet cylinder without an auto switch is required, there is no need to enter the symbol for the auto switch.
(Example) CDVM5B25-150-25GS

Auto switch

Nil	Without auto switch

∗ For the applicable auto switch model, refer to the table below.

Number of auto switches

Nil	2 pcs.
S	1 pc.
n	"n" pcs.

Auto switch mounting bracket Note)

Note) This symbol is indicated when the D-A9□ or M9□ type auto switch is specified. This mounting bracket does not apply to other auto switches (D-C7□ and H7□, etc.) (Nil)

Applicable Auto Switches/Refer to pages 1341 to 1435 for further information on auto switches.

Type	Special function	Electrical entry	Indicator light	Wiring (Output)	Load voltage DC	Load voltage DC	Load voltage AC	Auto switch model Perpendicular	Auto switch model In-line	Lead wire length (m) 0.5 (Nil)	1 (M)	3 (L)	5 (Z)	None (N)	Pre-wired connector	Applicable load	
Solid state auto switch	—	Grommet	Yes	3-wire (NPN)	24 V	5 V, 12 V	—	M9NV	M9N	●	●	●	○	—	○	IC circuit	Relay, PLC
				3-wire (PNP)				M9PV	M9P	●	●	●	○	—	○		
				2-wire		12 V		M9BV	M9B	●	●	●	○	—	○	—	
		Connector						—	H7C	●	—	●	●	●	—		
	Diagnostic indication (2-color indicator)	Grommet		3-wire (NPN)		5 V, 12 V		M9NWV	M9NW	●	●	●	○	—	○	IC circuit	
				3-wire (PNP)				M9PWV	M9PW	●	●	●	○	—	○		
				2-wire		12 V		M9BWV	M9BW	●	●	●	○	—	○	—	
	Water resistant (2-color indicator)			3-wire (NPN)		5 V, 12 V		M9NAV∗1	M9NA∗1	○	○	●	○	—	○	IC circuit	
				3-wire (PNP)				M9PAV∗1	M9PA∗1	○	○	●	○	—	○		
				2-wire		12 V		M9BAV∗1	M9BA∗1	○	○	●	○	—	○	—	
	With diagnostic output (2-color indicator)			4-wire (NPN)		5 V, 12 V		—	H7NF	●	—	●	○	—	○	IC circuit	
Reed auto switch	—	Grommet	Yes	3-wire (NPN equivalent)	—	5 V	—	A96V	A96	●	—	●	—	—	—	IC circuit	—
			None	2-wire	24 V	12 V	100 V	A93V∗2	A93	●	●	●	●	—	—	—	Relay, PLC
			Yes				100 V or less	A90V	A90	●	—	●	—	—	—	IC circuit	
			None				100 V, 200 V	—	B54	●	—	●	●	—	—	—	
			Yes				200 V or less	—	B64	●	—	●	—	—	—		
		Connector	Yes				—	—	C73C	●	—	●	●	●	—		
			None				24 V or less	—	C80C	●	—	●	●	●	—	IC circuit	
	Diagnostic indication (2-color indicator)	Grommet	Yes			—	—	—	B59W	●	—	●	—	—	—	—	

∗ Lead wire length symbols: 0.5 m ····· Nil (Example) M9NW
1 m ····· M (Example) M9NWM
3 m ····· L (Example) M9NWL
5 m ····· Z (Example) M9NWZ
None ····· N (Example) H7CN

∗ Solid state auto switches marked with "○" are produced upon receipt of order.
∗1 Water resistant type auto switches can be mounted on the above models, but in such case SMC cannot guarantee water resistance. Consult with SMC regarding water resistant types with the above model numbers.
∗2 1 m type lead wire is only applicable to D-A93.

∗ Since there are other applicable auto switches than listed, refer to page 1193 for details.
∗ For details about auto switches with pre-wired connector, refer to pages 1410 and 1411.
∗ D-A9□/M9□ auto switches are shipped together (not assembled). (Only auto switch mounting brackets are assembled before shipped.)

Operation type can be changed to rod extended when energized or rod retracted when energized.

An auto switch cylinder with the switch installed can also be manufactured.

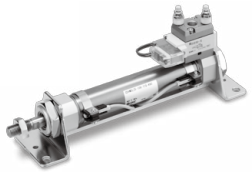

Symbol
Rubber bumper

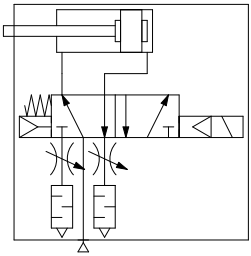

Made to Order Specifications

Click here for details

Symbol	Specifications
-XA□	Change of rod end shape
-XC4	With heavy duty scraper
-XC6	Made of stainless steel

Refer to pages 1191 to 1193 for cylinders with auto switches.

- Proper auto switch mounting position (detection at stroke end) and mounting height
- Minimum auto switch mounting stroke
- Operating range
- Auto switch mounting bracket: Part no.

Specifications

Applicable bore size (mm)		20	25	32	40
Fluid		Air			
Action		Double acting, Single rod			
Cushion		Rubber bumper			
Proof pressure		1.0 MPa			
Maximum operating pressure		0.7 MPa			
Minimum operating pressure		0.15 MPa			
Ambient and fluid temperature		–10 to 50°C (No freezing)			
Lubrication		Not required (Non-lube)			
Stroke length tolerance		$^{+1.4}_{0}$			
Port size	**Screw-in type**	Rc 1/8			
	Built-in One-touch fitting	O.D.: ø6/I.D.: ø4			
Piston speed (mm/s) Note)		50 to 700*	50 to 650*	50 to 590*	50 to 420*
Allowable kinetic energy		0.27 J	0.4 J	0.65 J	1.2 J
Mounting		Basic type, Axial foot type, Rod side flange type, Head side flange type, Single clevis type, Double clevis type, Head side trunnion type, Rod side trunnion type			

Note) The figures marked with "*" represent the values of the cylinder with the silencer type exhaust throttle valve removed. To operate the cylinder at these values, prevent dust from entering by installing an AN120-M5 silencer on the EXH port.

Solenoid Valve Specifications

Series			SYJ5□90 series	
Manual override			Non-locking push type, Push-turn locking slotted type, Push-turn locking lever type	
Pilot exhaust			Pilot valve individual exh. Type	
Impact/Vibration resistance (m/s²) Note 1)			150/30	
Enclosure			Dustproof	
Electrical entry			Grommet (G), L plug connector (L), M plug connector (M), DIN terminal (D)	
			G, L, M	D
Coil rated voltage (V)	**DC**		24, 12, 6, 5, 3	24, 12
	AC 50/60 Hz		100, 110, 200, 220	
Allowable voltage			±10% of the rated voltage*	
Power consumption (W) Note 2)	**DC**		0.35 {With light: 0.4 (DIN terminal with light: 0.45)}	
Apparent power (VA) Note 2)	**AC**	**100 V**	0.78 (With light: 0.81)	0.78 (With light: 0.87)
		110 V [115 V]	0.86 (With light: 0.89) [0.94 (With light: 0.97)]	0.86 (With light: 0.97) [0.94 (With light: 1.07)]
		200 V	1.18 (With light: 1.22)	1.15 (With light: 1.30)
		220 V [230 V]	1.30 (With light: 1.34) [1.42 (With light: 1.46)]	1.27 (With light: 1.46) [1.39 (With light: 1.60)]
Surge voltage suppressor			Diode (DIN terminal, Varistor when non-polar types)	
Indicator light			LED (Neon light when AC with DIN terminal)	

* Based on IEC60529
* In common between 110 VAC and 115 VAC, and between 220 VAC and 230 VAC.
* For 115 VAC and 230 VAC, the allowable voltage is –15% to +5% of rated voltage.

Note 1) Impact resistance: No malfunction occurred when it is tested in the axial direction and at the right angles to the main valve and armature in both energized and de-energized states every once for each condition. (Values at the initial period)
Vibration resistance: No malfunction occurred in a one-sweep test between 45 and 2000 Hz. The test was performed at both energized and de-energized states in the axial direction and at the right angles to the main valve and armature. (Values at the initial period)

Note 2) At the rated voltage.

Standard Stroke

Bore size (mm)	Standard stroke (mm) Note)	Maximum stroke (mm)
20	25, 50, 75, 100, 125, 150, 200, 250, 300	1000
25		
32		
40		

Note 1) Other intermediate strokes can be manufactured upon receipt of order.
Note 2) Applicable strokes should be confirmed according to the usage. For details, refer to the CM2 series of the "Air Cylinders Model Selection" in the **Web Catalog**. In addition, the products that exceed the standard stroke might not be able to fulfill the specifications due to the deflection etc.

Rod Boot Material

Symbol	Rod boot material	Maximum ambient temperature
J	Nylon tarpaulin	70°C
K	Heat resistant tarpaulin	110°C*

* Maximum ambient temperature for the rod boot itself.

Weight

(kg)

Bore size (mm)		20	25	32	40
Basic Weight	Basic type	0.22	0.29	0.36	0.64
	Axial foot type	0.37	0.45	0.52	0.91
	Flange type	0.28	0.38	0.45	0.76
	Single clevis type	0.26	0.33	0.40	0.73
	Double clevis type	0.27	0.35	0.41	0.77
	Trunnion type	0.26	0.36	0.42	0.74
Additional weight per each 50 mm of stroke		0.05	0.07	0.09	0.14
Option bracket	Single knuckle joint	0.06	0.06	0.06	0.23
	Double knuckle joint (With pin)	0.07	0.07	0.07	0.20

Calculation: (Example) **CVM5L32-100-11G**
- Basic weight ····· 0.52 (Axial foot type ø32) • Additional weight ····· 0.09/50 st
- Cylinder stroke ····· 100 (st)
  0.52 + 0.09 x 100/50 = 0.70 kg
- Add 0.03 kg for the DIN terminal.
- Add 0.02 kg for the double solenoids.
- Add 0.03 kg for the closed center and exhaust center.

Mounting Type and Accessory

Mounting \ Accessory	Standard equipment			Option			
	Mounting nut	Rod end nut	Clevis pin	Single knuckle joint	Double knuckle joint (3)	Pivot bracket (5)	Pivot bracket pin (6)
Basic type	● (1 pc.)	●	—	●	●	—	—
Axial foot type	● (2)	●	—	●	●		
Rod side flange type	● (1)	●	—	●	●		
Head side flange type	● (1)	●	—	●	●		
Single clevis type	— (1)	●	—	●	●	●	●
Double clevis type (3)	— (1)	●	● (4)	●	●	—	—
Head side trunnion type	● (1) (2)	●	—	●	●	●	—
Rod side trunnion type	● (1) (2)	●	—	●	●		

Note 1) Mounting nut is not equipped with single clevis type and double clevis type
Note 2) Trunnion nuts are equipped for head side trunnion and rod side trunnion.
Note 3) Pin and set ring are shipped together with double clevis and double knuckle joint.
Note 4) Retaining rings (cotter pins for ø40) are included in clevis pins.
Note 5) Pin and retaining ring are not included in pivot bracket.
Note 6) Retaining rings are included in pivot bracket pin.

Mounting Bracket Part No.

Bore size (mm)	20	25	32	40
Axial foot *	CM-L020B	CM-L032B		CM-L040B
Flange	CM-F020B	CM-F032B		CM-F040B
Single clevis	CM-C020B	CM-C032B		CM-C040B
Double clevis**	CM-D020B	CM-D032B		CM-D040B
Trunnion (With nut)	CM-T020B	CM-T032B		CM-T040B

* Two foot brackets and a mounting nut are attached.
When ordering the foot bracket, order 2 pcs. per cylinder.
** Clevis pin and retaining ring (cotter pin for ø40) are packaged together.

Accessory (Option)

* Refer to page 1190 for part numbers and dimensions of the single knuckle joint, double knuckle joint, clevis pin, knuckle pin, rod end nut, mounting nut, and trunnion nut.
* Refer to page 255 of the CM2-Z series catalog for the part numbers and external dimensions of the pivot bracket and pivot bracket pin as well as for the dimensions when the cylinder is mounted.

⚠Precautions

Be sure to read this before handling the products. Refer to page 9 for safety instructions, pages 10 to 19 for actuator and auto switch precautions, and 3/4/5 port solenoid valve precautions on the SMC website: https://www.smcworld.com

Mounting

⚠Warning

1. Do not rotate the cover.
If a cover is rotated when installing a cylinder or screwing a fitting into the port, it is likely to damage the junction part with cover.

⚠Caution

1. Not able to disassemble.
Cover and cylinder tube are connected to each other by caulking method, thus making it impossible to disassemble. Therefore, internal parts of a cylinder other than rod seal are not replaceable.

2. Use caution to the popping of a retaining ring.
When replacing rod seals and removing and mounting a retaining ring, use a proper tool (retaining ring plier: tool for installing type C retaining ring). Even if a proper tool is used, it is likely to inflict damage to a human body or peripheral equipment, as a retaining ring may be flown out of the tip of a plier. Be much careful with the popping of a retaining ring. Besides, be certain that a retaining ring is placed firmly into the groove of rod cover before supplying air at the time of installment.

3. Do not touch the cylinder during operation.
Use caution when handling a cylinder, which is running at a high speed and a high frequency, because the surface of a cylinder tube could get so hot enough as to cause you get burns.

4. Do not use an air cylinder as an air-hydro cylinder.
If it uses turbine oil in place of fluids for cylinder, it may result in oil leakage.

5. Conjoin the rod end part, so that rod boot might not be twisted.
If a rod boot is installed with being twisted when installing a cylinder, it will cause a rod boot to fail during operation.

Model Selection

⚠Warning

1. Confirm the specifications.
Products in this catalog are designed to be used for compressed air systems. If not operated within the designated pressure or temperature, it may damage the products or cause malfunction. (Refer to specifications.)

2. Energizing continuously for a long period of time
When the valve is continuously energized for a long period of time, the performance may deteriorate, shorten the service life or affect peripheral equipment adversely since temperature rises when coils generate heat.

Built-in One-touch Fitting

CVM5 [Mounting type] [Bore size] **F** — [For "How to Order", refer to page 1175.]

F: Built-in One-touch fitting

One-touch fittings are installed on cylinders.

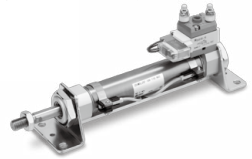

Application/Tubing O.D.

Bore size (mm)	20	25	32	40
Applicable tubing O.D. (mm)	ø6/4	ø6/4	ø6/4	ø6/4
Applicable tubing material	Can be used for either nylon, soft nylon or polyurethane tube.			

Specifications

Action	Double acting, Single rod			
Bore size (mm)	20, 25, 32, 40			
Maximum operating pressure	0.7 MPa			
Minimum operating pressure	0.15 MPa			
Cushion	Rubber bumper			
Piping	Built-in One-touch fitting			
Piston speed (mm/s)	ø20	ø25	ø32	ø40
	50 to 700	50 to 650	50 to 590	50 to 420
Mounting	Basic type, Axial foot type, Rod side flange type, Head side flange type, Single clevis type, Double clevis type, Rod side trunnion type, Head side trunnion type			

For the dimensions of mounting bracket, refer to pages 1181 to 1184.

Opening Range of Throttle Valve and Driving Speed

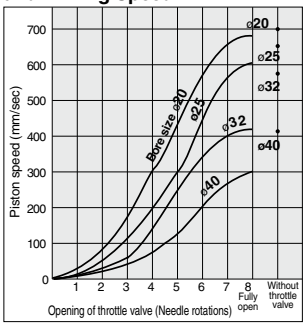

Measuring conditions: Operating pressure 0.5 MPa
Mounting: horizontal Load: no load on the return side
The speeds indicated above are for reference.

Manual Operation

Manual operation is possible by pushing the manual button indicated with the arrow.

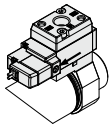

Piston Speed Adjustment

- To slow down the piston speed, screw in the needle of the silencer type exhaust throttle valve clockwise, which reduces the amount of air that is discharged.
- To adjust the piston extension side, regulate the "R1" side silencer type exhaust throttle valve.
  To adjust the retraction side, regulate the "R2" side silencer exhaust throttle valve.
- The needle valve of the throttle valve can be fully opened by loosening it 8 turns from the fully closed position.
- The needle valve has a loosening prevention construction.

Changing between Rod Extended when Energized and Rod Retracted when Energized

Step [This procedure is for changing the rod extended when energized to the rod retracted when energized.]

1. Using a tool, loosen the two hexagon socket bolts, and remove the plate and the solenoid valve. At this time, instead of removing the plate and the solenoid valve separately, remove them together, with the hexagon socket bolts remaining inserted.

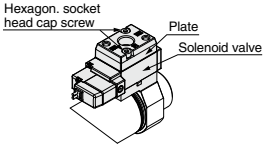

2. A sub-plate gasket is inside the sub-plate. Invert this sub-plate gasket 180° and install it with its letter "B" visible. (A portion that protrudes is provided on the periphery of the sub-plate gasket, and the letter "B" is on one side of this protrusion.)

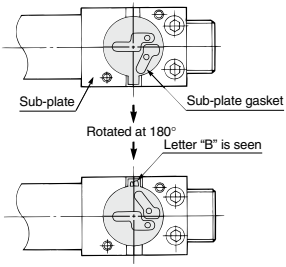

3. Install the solenoid valve and the plate, and tighten the hexagon socket bolts with a tool. The tightening torque is between 0.6 and 0.8 N·m.
   After tightening, press the manual button on the solenoid valve, check for any air leaks, and verify the operating conditions. Distinction between rod extended when energized and rod retracted when energized can be determined from the outside, by looking through the small window in the sub-plate.

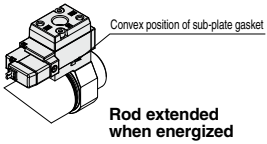

Rod extended when energized

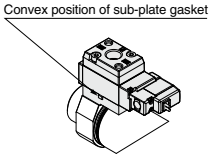

Rod retracted when energized

Construction

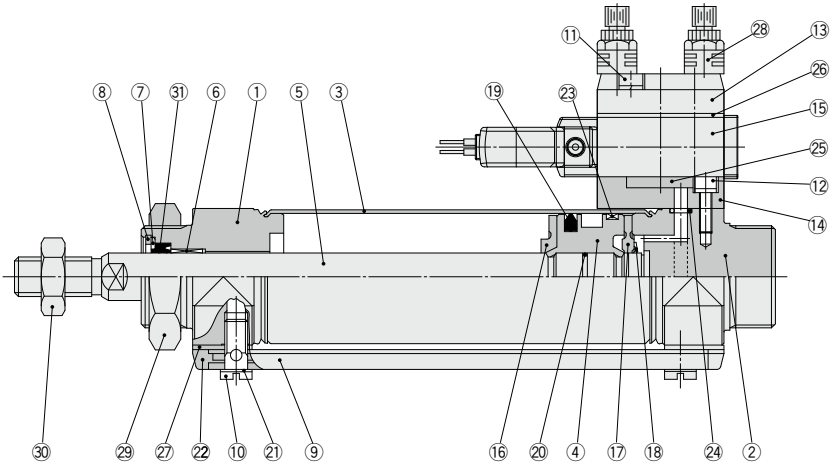

DIN terminal

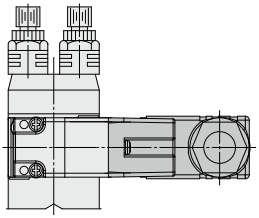

Built-in One-touch fitting

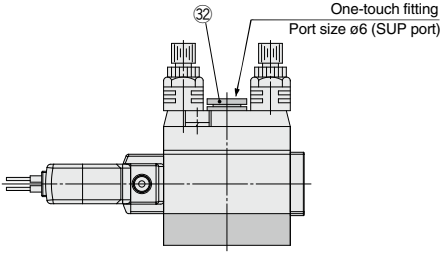

Component Parts

No.	Description	Material	Note
1	**Rod cover**	Aluminum alloy	Anodized
2	**Head cover**	Aluminum alloy	Anodized
3	**Cylinder tube**	Stainless steel	
4	**Piston**	Aluminum alloy	
5	**Piston rod**	Carbon steel	Hard chrome plated
6	**Bushing**	Bearing alloy	
7	**Seal retainer**	Stainless steel	
8	**Retaining ring**	Carbon steel	Phosphate coated
9	**Pipe**	Aluminum alloy	
10	**Stud**	Brass	Electroless nickel plated
11	Hex. socket head cap screw with spring washer	Stainless steel	
12	Hex. socket head cap screw with spring washer	Stainless steel	
13	**Plate**	Aluminum alloy	Metallic painted
14	**Sub-plate**	Aluminum alloy	Metallic painted
15	**Solenoid valve**	—	Refer to the "How to order" below.*
16	**Bumper A**	Urethane	
17	**Bumper B**	Urethane	

* How to order solenoid valves

SYJ5 □ 9 0 - □□□□

- Type of actuation
- Rated voltage
- Manual override
- Electrical entry
- Light/Surge voltage suppressor

Nil	Valves other than those below
–Q	All valves with a DC rated voltage
	Valves with an AC rated voltage (DIN terminal only)

Component Parts

No.	Description	Material	Note
18	**Retaining ring**	Stainless steel	
19	**Piston seal**	NBR	
20	**Piston gasket**	NBR	
21	**Gasket**	Resin	
22	**Pipe gasket**	Urethane rubber	
23	**Wear ring**	Resin	
24	**Head cover gasket**	NBR	
25	**Sub-plate gasket**	NBR	
26	**Gasket**	NBR	
27	**Spacer gasket**	Resin	Except ø25
28	**Exhaust throttle with silencer**	—	ASN2-M5
29	**Mounting nut**	Carbon steel	Nickel plated
30	**Rod end nut**	Carbon steel	Zinc chromated
32	**One-touch fitting**	—	Port size: ø6

Replacement Parts/Seal Kit

No.	Description	Material	Part no.			
			20	**25**	**32**	**40**
31	**Rod seal**	NBR	CM220-PS	CM225-PS	CM232-PS	CM240-PS

* Since the seal kit does not include a grease pack, order it separately.
Grease pack part no.: GR-S-010 (10g)

Basic Type (B)

CVM5B **Bore size** — **Stroke** ☐

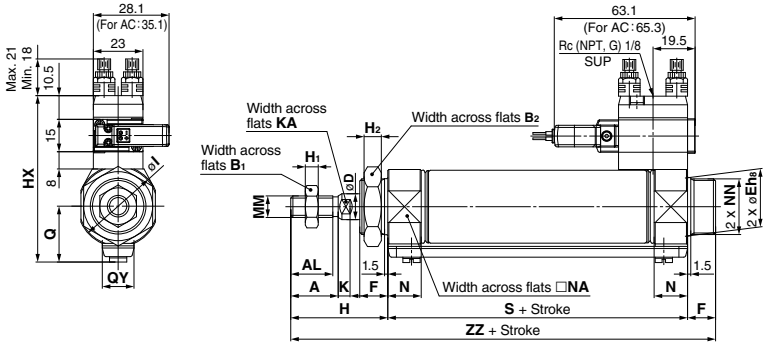

Built-in One-touch fitting

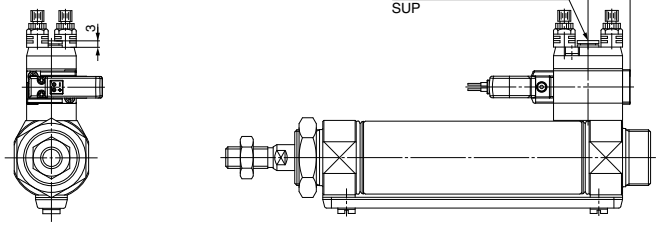

With rod boot

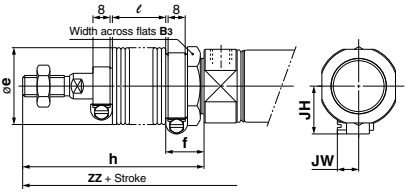

For DIN terminal and double solenoid, refer to page 1184.

(mm)

Bore size (mm)	Stroke range	A	AL	B_1	B_2	D	Eh_8	F	Q	QY	H	H_1	H_2	HX	I	K	KA	MM	N	NA	NN	S	ZZ
20	Up to 300	18	15.5	13	26	8	$20^{0}_{-0.033}$	13	19.8	14	41	5	8	65.3	28	5	6	M8 x 1.25	15	24	M20 x 1.5	62	116
25	Up to 300	22	19.5	17	32	10	$26^{0}_{-0.033}$	13	22	14	45	6	8	70.5	33.5	5.5	8	M10 x 1.25	15	30	M26 x 1.5	62	120
32	Up to 300	22	19.5	17	32	12	$26^{0}_{-0.033}$	13	25.8	16	45	6	8	76.5	37.5	5.5	10	M10 x 1.25	15	34.5	M26 x 1.5	64	122
40	Up to 300	24	21	22	41	14	$32^{0}_{-0.039}$	16	29.8	16	50	8	10	84.5	46.5	7	12	M14 x 1.5	21.5	42.5	M32 x 2	88	154

With Rod Boot

(mm)

Bore size (mm)	B_3	e	f	h							ℓ							JH	JW
				1 to 50	51 to 100	101 to 150	151 to 200	201 to 300	301 to 400	401 to 500	1 to 50	51 to 100	101 to 150	151 to 200	201 to 300	301 to 400	401 to 500	(Reference)	(Reference)
20	30	36	18	68	81	93	106	131	156	181	12.5	25	37.5	50	75	100	125	23.5	10.5
25	32	36	18	72	85	97	110	135	160	185	12.5	25	37.5	50	75	100	125	23.5	10.5
32	32	36	18	72	85	97	110	135	160	185	12.5	25	37.5	50	75	100	125	23.5	10.5
40	41	46	20	77	90	102	115	140	165	190	12.5	25	37.5	50	75	100	125	27	10.5

Bore size (mm)	ZZ						
	1 to 50	51 to 100	101 to 150	151 to 200	201 to 300	301 to 400	401 to 500
20	143	156	168	181	206	231	256
25	147	160	172	185	210	235	260
32	149	162	174	187	212	237	262
40	181	194	206	219	244	269	294

∗ For short strokes, a solenoid valve may protrude from the rod cover end. Confirm S dimension and solenoid dimensions.
∗ Long stroke type includes ones for strokes more than 301 mm.

Axial Foot Type (L)

CVM5L Bore size — Stroke

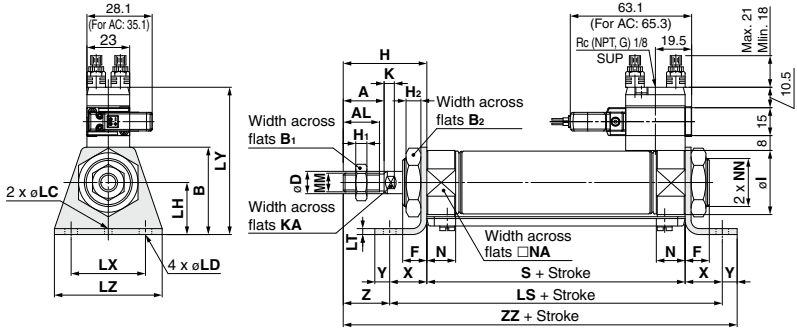

(mm)

Bore size (mm)	Stroke range	A	AL	B	B_1	B_2	D	F	H	H_1	H_2	I	K	KA	LC	LD	LH	LS	LT	LX
20	Up to 300	18	15.5	40	13	26	8	13	41	5	8	28	5	6	4	6.8	25	102	3.2	40
25	Up to 300	22	19.5	47	17	32	10	13	45	6	8	33.5	5.5	8	4	6.8	28	102	3.2	40
32	Up to 300	22	19.5	47	17	32	12	13	45	6	8	37.5	5.5	10	4	6.8	28	104	3.2	40
40	Up to 300	24	21	54	22	41	14	16	50	8	10	46.5	7	12	4	7	30	134	3.2	55

(mm)

Bore size (mm)	LY	LZ	MM	N	NA	NN	S	X	Y	Z	ZZ
20	70.5	55	M8 x 1.25	15	24	M20 x 1.5	62	20	8	21	131
25	76.5	55	M10 x 1.25	15	30	M26 x 1.5	62	20	8	25	135
32	78.8	55	M10 x 1.25	15	34.5	M26 x 1.5	64	20	8	25	137
40	84.8	75	M14 x 1.5	21.5	42.5	M32 x 2	88	23	10	27	171

∗ Brackets are packaged together.

Rod Side Flange Type (F)

CVM5F Bore size — Stroke

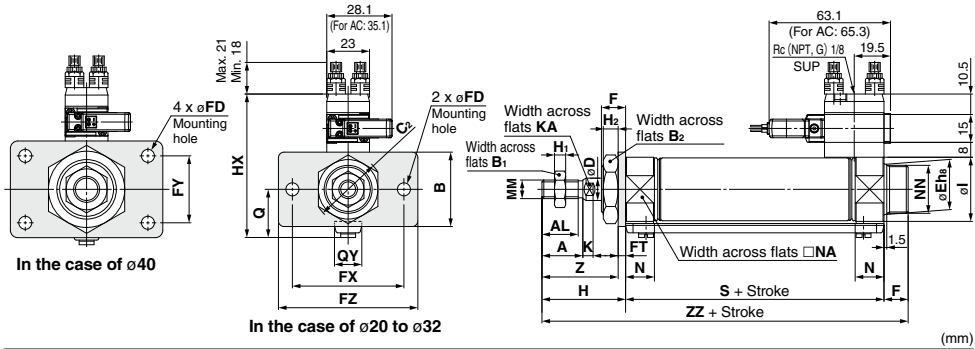

(mm)

Bore size (mm)	Stroke range	A	AL	B	B_1	B_2	C_2	D	Eh_8	F	FD	FT	FX	FY	FZ	H	H_1	H_2	HX
20	Up to 300	18	15.5	34	13	26	30	8	$20^{0}_{-0.033}$	13	7	4	60	—	75	41	5	8	65.3
25	Up to 300	22	19.5	40	17	32	37	10	$26^{0}_{-0.033}$	13	7	4	60	—	75	45	6	8	70.5
32	Up to 300	22	19.5	40	17	32	37	12	$26^{0}_{-0.033}$	13	7	4	60	—	75	45	6	8	76.5
40	Up to 300	24	21	52	22	41	47.3	14	$32^{0}_{-0.039}$	16	7	5	66	36	82	50	8	10	84.5

(mm)

Bore size (mm)	I	K	KA	MM	N	NA	NN	Q	QY	S	Z	ZZ
20	28	5	6	M8 x 1.25	15	24	M20 x 1.5	19.8	14	62	37	116
25	33.5	5.5	8	M10 x 1.25	15	30	M26 x 1.5	22	14	62	41	120
32	37.5	5.5	10	M10 x 1.25	15	34.5	M26 x 1.5	25.8	16	64	41	122
40	46.5	7	12	M14 x 1.5	21.5	42.5	M32 x 2	29.8	16	88	45	154

∗ For short strokes, a solenoid valve may protrude from the rod cover end. Confirm S dimension and solenoid dimensions.
∗ Brackets are packaged together.

Head Side Flange Type (G)

CVM5G [Bore size] — [Stroke] [ ]

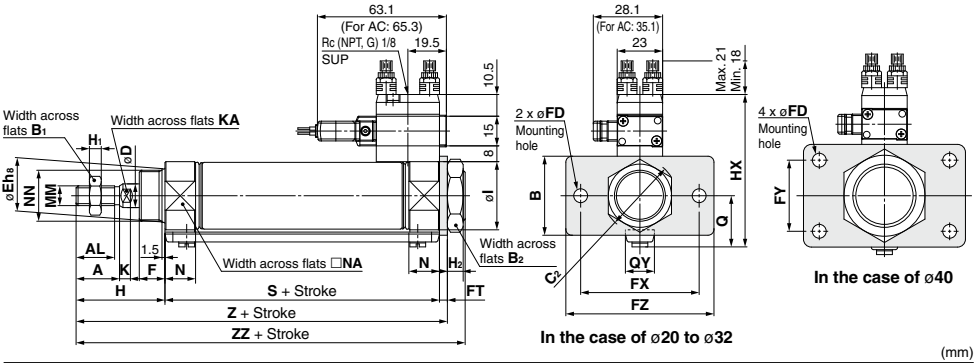

(mm)

Bore size (mm)	Stroke range	A	AL	B	B_1	B_2	C_2	D	Eh_8	F	FD	FT	FX	FY	FZ	H	H_1	H_2	HX
20	Up to 300	18	15.5	34	13	26	30	8	$20^{0}_{-0.033}$	13	7	4	60	—	75	41	5	8	65.3
25	Up to 300	22	19.5	40	17	32	37	10	$26^{0}_{-0.033}$	13	7	4	60	—	75	45	6	8	70.5
32	Up to 300	22	19.5	40	17	32	37	12	$26^{0}_{-0.033}$	13	7	4	60	—	75	45	6	8	76.5
40	Up to 300	24	21	52	22	41	47.3	14	$32^{0}_{-0.039}$	16	7	5	66	36	82	50	8	10	84.5

(mm)

Bore size (mm)	I	K	KA	MM	N	NA	NN	Q	QY	S	Z	Z
20	28	5	6	M8 x 1.25	15	24	M20 x 1.5	19.8	14	62	107	107
25	33.5	5.5	8	M10 x 1.25	15	30	M26 x 1.5	22	14	62	111	111
32	37.5	5.5	10	M10 x 1.25	15	34.5	M26 x 1.5	25.8	16	64	113	113
40	46.5	7	12	M14 x 1.5	21.5	42.5	M32 x 2	29.8	16	88	143	143

∗ Brackets are packaged together.

Single Clevis Type (C)

CVM5C [Bore size] — [Stroke]

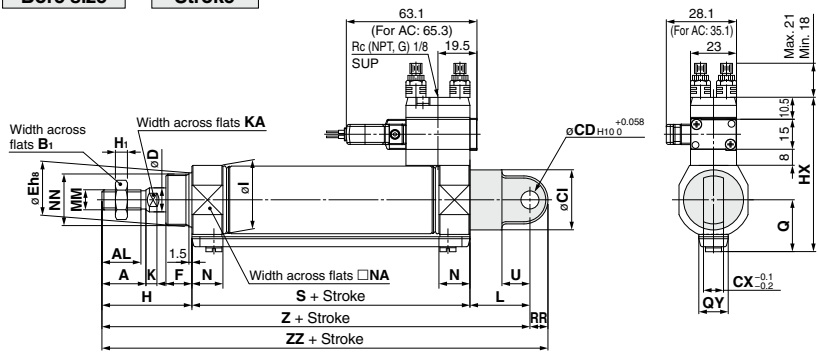

(mm)

Bore size (mm)	Stroke range	A	AL	B_1	CD	CI	CX	D	Eh_8	F	H	H_1	I	HX	K	KA	L	MM
20	Up to 300	18	15.5	13	9	24	10	8	$20^{0}_{-0.033}$	13	41	5	28	65.3	5	6	30	M8 x 1.25
25	Up to 300	22	19.5	17	9	30	10	10	$26^{0}_{-0.033}$	13	45	6	33.5	70.5	5.5	8	30	M10 x 1.25
32	Up to 300	22	19.5	17	9	30	10	12	$26^{0}_{-0.033}$	13	45	6	37.5	76.5	5.5	10	30	M10 x 1.25
40	Up to 300	24	21	22	10	38	15	14	$32^{0}_{-0.039}$	16	50	8	46.5	84.5	7	12	39	M14 x 1.5

(mm)

Bore size (mm)	N	NA	NN	Q	QY	RR	S	U	Z	ZZ
20	15	24	M20 x 1.5	19.8	14	9	62	14	133	142
25	15	30	M26 x 1.5	22	14	9	62	14	137	146
32	15	34.5	M26 x 1.5	25.8	16	9	64	14	139	148
40	21.5	42.5	M32 x 2	29.8	16	11	88	18	177	188

Double Clevis Type (D)

CVM5D Bore size — Stroke

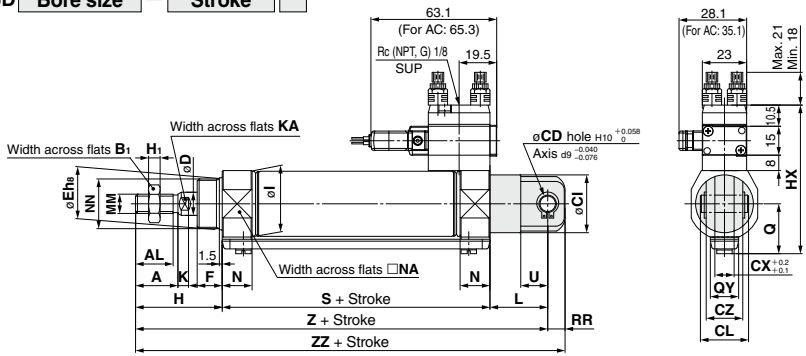

(mm)

Bore size (mm)	Stroke range	A	AL	B_1	CD	CI	CL	CX	CZ	D	Eh_8	F	H	H_1	HX	I	K	KA	L
20	Up to 300	18	15.5	13	9	24	25	10	19	8	$20^{0}_{-0.033}$	13	41	5	65.3	28	5	6	30
25	Up to 300	22	19.5	17	9	30	25	10	19	10	$26^{0}_{-0.033}$	13	45	6	70.5	33.5	5.5	8	30
32	Up to 300	22	19.5	17	9	30	25	10	19	12	$26^{0}_{-0.033}$	13	45	6	76.5	37.5	5.5	10	30
40	Up to 300	24	21	22	10	38	41.2	15	30	14	$32^{0}_{-0.039}$	16	50	8	84.5	46.5	7	12	39

(mm)

Bore size (mm)	MM	N	NA	NN	Q	QY	RR	S	U	Z	ZZ
20	M8 x 1.25	15	24	M20 x 1.5	19.8	14	9	62	14	133	142
25	M10 x 1.25	15	30	M26 x 1.5	22	14	9	62	14	137	146
32	M10 x 1.25	15	34.5	M26 x 1.5	25.8	16	9	64	14	139	148
40	M14 x 1.5	21.5	42.5	M32 x 2	29.8	16	11	88	18	177	188

∗ Clevis pin and snap ring (cotter pin for ø40) are packaged together.

Rod Side Trunnion Type (U)

CVM5U Bore size — Stroke

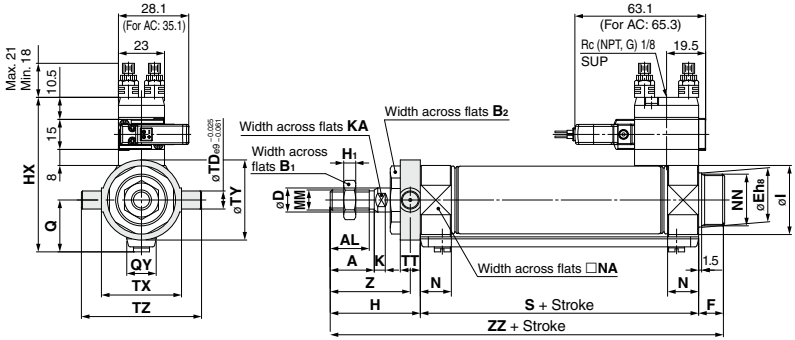

(mm)

Bore size (mm)	Stroke range	A	AL	B_1	B_2	D	Eh_8	F	H	H_1	HX	I	K	KA	MM	N	NA	NN
20	Up to 300	18	15.5	13	26	8	$20^{0}_{-0.033}$	13	41	5	65.3	28	5	6	M8 x 1.25	15	24	M20 x 1.5
25	Up to 300	22	19.5	17	32	10	$26^{0}_{-0.033}$	13	45	6	70.5	33.5	5.5	8	M10 x 1.25	15	30	M26 x 1.5
32	Up to 300	22	19.5	17	32	12	$26^{0}_{-0.033}$	13	45	6	76.5	37.5	5.5	10	M10 x 1.25	15	34.5	M26 x 1.5
40	Up to 300	24	21	22	41	14	$32^{0}_{-0.039}$	16	50	8	84.5	46.5	7	12	M14 x 1.5	21.5	42.5	M32 x 2

(mm)

Bore size (mm)	Q	QY	S	TD	TT	TX	TY	TZ	Z	ZZ
20	19.8	14	62	8	10	32	32	52	36	116
25	22	14	62	9	10	40	40	60	40	120
32	25.8	16	64	9	10	40	40	60	40	122
40	29.8	16	88	10	11	53	53	77	44.5	154

∗ Brackets are packaged together.

Head Side Trunnion Type (T)

CVM5T [Bore size] — [Stroke] [ ]

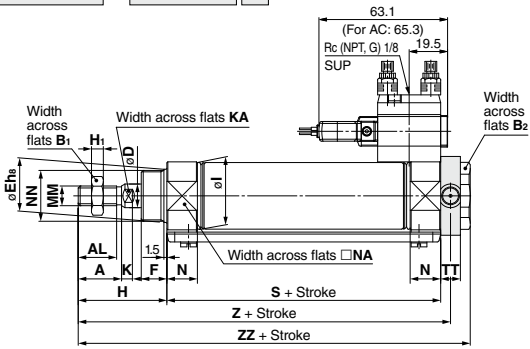

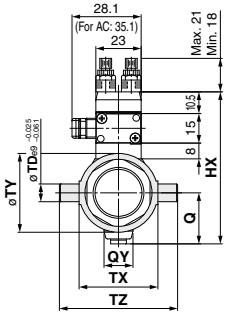

(mm)

Bore size (mm)	Stroke range	A	AL	B_1	B_2	D	Eh_8	F	H	H_1	HX	I	K	KA	MM	N	NA	NN
20	Up to 300	18	15.5	13	26	8	$20^{0}_{-0.033}$	13	41	5	65.3	28	5	6	M8 x 1.25	15	24	M20 x 1.5
25	Up to 300	22	19.5	17	32	10	$26^{0}_{-0.033}$	13	45	6	70.5	33.5	5.5	8	M10 x 1.25	15	30	M26 x 1.5
32	Up to 300	22	19.5	17	32	12	$26^{0}_{-0.033}$	13	45	6	76.5	37.5	5.5	10	M10 x 1.25	15	34.5	M26 x 1.5
40	Up to 300	24	21	22	41	14	$32^{0}_{-0.039}$	16	50	8	84.5	46.5	7	12	M14 x 1.5	21.5	42.5	M32 x 2

(mm)

Bore size (mm)	Q	QY	S	TD	TT	TX	TY	TZ	Z	ZZ
20	19.8	14	62	8	10	32	32	52	108	118
25	22	14	62	9	10	40	40	60	112	122
32	25.8	16	64	9	10	40	40	60	114	124
40	29.8	16	88	10	11	53	53	77	143.5	154

∗ Brackets are packaged together.

DIN Terminal

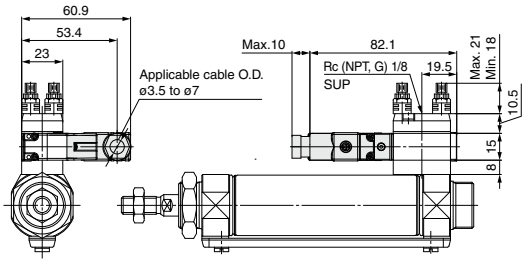

Double Solenoid

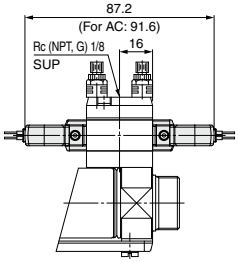

∗ For the mounting brackets of flange, single clevis, double clevis and head side trunnion type, the doule soleoid may not be used depending on the mounting conditions.

Valve Mounted Cylinder: Non-rotating Rod Type Double Acting

CVM5K Series

ø20, ø25, ø32, ø40

How to Order

Rated voltage

DC		AC (50/60 Hz)	
5	24 VDC	1	100 VAC
6	12 VDC	2	200 VAC
V	6 VDC	3	110 VAC [115 VAC]
S	5 VDC	4	220 VAC [230 VAC]
R	3 VDC		

∗ For the DC specification DIN terminal, only 24 and 12 VDC are available.

Light/Surge voltage suppressor

Electrical entry for G, L, M

Nil	Without light/surge voltage suppressor
S	With surge voltage suppresor
Z	With light/surge voltage suppressor
R	With surge voltage suppressor (Non-polar type)
U	With light/surge voltage suppressor (Non-polar type)

∗ For AC voltage valves there is no "S" option. It is already built-in to the rectifier circuit.
∗ For type "R" and "U", DC voltage is only available.

Electrical entry for D

Nil	Without light/surge voltage suppressor
S	With surge voltage suppressor (Non-polar type)
Z	With light/surge voltage suppressor (Non-polar type)

∗ For AC voltage valves there is no "S" option. It is already built-in to the rectifier circuit.

Mounting type

B	Basic type
L	Axial foot type
F	Rod side flange type
G	Head side flange type
C	Single clevis type
D	Double clevis type
T	Head side trunnion type
U	Rod side trunnion type

Electrical entry

G	Grommet
L	L plug connector
M	M plug connector
D	DIN terminal

Type of actuation

1	2 position single
2	2 position double
3	3 position closed center
4	3 position exhaust center

Manual override

Nil	Non-locking push type
D	Push-turn locking slotted type
E	Push-turn locking lever type

Made to Order
Refer to page 1186 for details.

CVM5K L 32 □ □ – 100 □ □ – 1 1 G Z □ – □

With auto switch: CDVM5K L 32 □ □ – 100 □ □ – 1 1 G Z □ – M9BW □ – C – □

With auto switch (Built-in magnet)

Non-rotating rod type

Bore size

20	20 mm
25	25 mm
32	32 mm
40	40 mm

Port thread type

Nil	Rc
TN	NPT
TF	G

Piping

Nil	Screw-in type
F	Built-in One-touch fitting

Cylinder stroke (mm)
(Refer to "Standard Stroke" on page 1186.)

Suffix for cylinder

Nil	None
J	Nylon tarpaulin
K	Heat resistant tarpaulin

Rod extended/retracted when energized

Nil	Rod extended when energized
B	Rod retracted when energized

∗ Only in case of 2 position single solenoid valve.

Auto switch

Nil	Without auto switch

∗ For the applicable auto switch model, refer to the table below.

Built-in Magnet Cylinder Model
If a built-in magnet cylinder without an auto switch is required, there is no need to enter the symbol for the auto switch.
(Example) CDVM5KF40-100-11GZ

Number of auto switches

Nil	2 pcs.
S	1 pc.
n	"n" pcs.

Auto switch mounting bracket Note)

Note) This symbol is indicated when the D-A9□ or M9□ type auto switch is specified. This mounting bracket does not apply to other auto switches (D-C7□ and H7□, etc.) (Nil)

Applicable Auto Switches/Refer to pages 1341 to 1435 for further information on auto switches.

Type	Special function	Electrical entry	Indicator light	Wiring (Output)	Load voltage DC	Load voltage AC	Auto switch model Perpendicular	Auto switch model In-line	Lead wire length (m) 0.5 (Nil)	1 (M)	3 (L)	5 (Z)	None (N)	Pre-wired connector	Applicable load	
Solid state auto switch	—	Grommet	Yes	3-wire (NPN)	5 V, 12 V	—	M9NV	M9N	●	●	●	○	—	○	IC circuit	Relay, PLC
				3-wire (PNP)			M9PV	M9P	●	●	●	○	—	○		
				2-wire	12 V		M9BV	M9B	●	●	●	○	—	○	—	
		Connector					—	H7C	●	—	●	●	●	—		
	Diagnostic indication (2-color indicator)	Grommet		3-wire (NPN)	5 V, 12 V		M9NWV	M9NW	●	●	●	○	—	○	IC circuit	
				3-wire (PNP)			M9PWV	M9PW	●	●	●	○	—	○		
				2-wire	12 V		M9BWV	M9BW	●	●	●	○	—	○	—	
	Water resistant (2-color indicator)			3-wire (NPN)	5 V, 12 V		M9NAV∗1	M9NA∗1	○	○	●	○	—	○	IC circuit	
				3-wire (PNP)			M9PAV∗1	M9PA∗1	○	○	●	○	—	○		
				2-wire	12 V		M9BAV∗1	M9BA∗1	○	○	●	○	—	○	—	
	With diagnostic output (2-color indicator)			4-wire (NPN)	5 V, 12 V		—	H7NF	●	—	●	○	—	○	IC circuit	
Reed auto switch	—	Grommet	Yes	3-wire (NPN equivalent)	—	5 V	—	A96V	A96	●	—	●	—	—	—	IC circuit	—
			None	2-wire	24 V	12 V	100 V	A93V∗2	A93	●	●	●	●	—	—	—	Relay, PLC
			Yes				100 V or less	A90V	A90	●	—	●	—	—	—	IC circuit	
			None				100 V, 200 V	—	B54	●	—	●	●	—	—	—	
			Yes				200 V or less	—	B64	●	—	●	—	—	—		
		Connector	None				—	—	C73C	●	—	●	●	●	—		
							24 V or less	—	C80C	●	—	●	●	●	—	IC circuit	
	Diagnostic indication (2-color indicator)	Grommet	Yes			—	—	—	B59W	●	—	●	—	—	—	—	

∗ Lead wire length symbols: 0.5 m ····· Nil (Example) M9NW
1 m ····· M (Example) M9NWM
3 m ····· L (Example) M9NWL
5 m ····· Z (Example) M9NWZ
None ····· N (Example) H7CN

∗ Solid state auto switches marked with "○" are produced upon receipt of order.
∗1 Water resistant type auto switches can be mounted on the above models, but in such case SMC cannot guarantee water resistance. Consult with SMC regarding water resistant types with the above model numbers.
∗2 1 m type lead wire is only applicable to D-A93.

∗ Since there are other applicable auto switches than listed, refer to page 1193 for details.
∗ For details about auto switches with pre-wired connector, refer to pages 1410 and 1411.
∗ D-A9□/M9□ auto switches are shipped together (not assembled). (Only auto switch mounting brackets are assembled before shipped.)

A hexagon shaped rod that does not rotate.

Non-rotating accuracy

ø20, ø25 — ±0.7°
ø32, ø40 — ±0.5°

Can operate without lubrication.

Auto switches can also be mounted.

Can be installed with auto switches to facilitate the detection of the cylinder's stroke position.

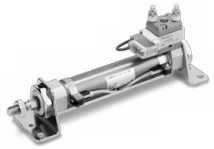

Symbol
Rubber bumper

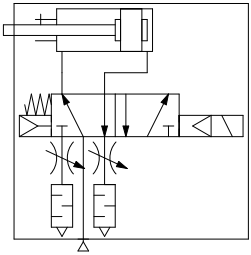

Made to Order

Made to Order Specifications

Click here for details

Symbol	Specifications
-XA□	Change of rod end shape

Refer to pages 1191 to 1193 for cylinders with auto switches.

- Proper auto switch mounting position (detection at stroke end) and mounting height
- Minimum auto switch mounting stroke
- Operating range
- Auto switch mounting bracket: Part no.

Specifications

Applicable bore size (mm)		20	25	32	40
Rod non-rotating accuracy		± 0.7°		± 0.5°	
Fluid		Air			
Action		Double acting, Single rod			
Proof pressure		1.0 MPa			
Maximum operating pressure		0.7 MPa			
Minimum operating pressure		0.15 MPa			
Ambient and fluid temperature		–10 to 50°C (No freezing)			
Lubrication		Not required (Non-lube)			
Stroke length tolerance		$^{+1.4}_{0}$			
Piston speed (mm/s)		50 to 700*	50 to 650*	50 to 590*	50 to 420*
Allowable kinetic energy		0.27 J	0.4 J	0.65 J	1.2 J
Port size	**Screw-in type**	Rc 1/8			
	Built-in One-touch fitting	O.D.: ø6/I.D.: ø4			
Mounting		Basic type, Axial foot type, Rod side flange type, Head side flange type, Single clevis type, Double clevis type, Head side trunnion type, Rod side trunnion type			

Note) The figures marked with "*" represent the values of the cylinder with the silencer type exhaust throttle valve removed. To operate the cylinder at these values, prevent dust from entering by installing an AN120-M5 silencer on the EXH port.

Solenoid Valve Specifications

Series			SYJ5□90 series	
Manual override			Non-locking push type, Push-turn locking slotted type, Push-turn locking lever type	
Pilot exhaust			Pilot valve individual exh. Type	
Impact/Vibration resistance (m/s²) Note 1)			150/30	
Enclosure			Dustproof	
Electrical entry			Grommet (G), L plug connector (L), M plug connector (M), DIN terminal (D)	
			G, L, M	D
Coil rated voltage (V)	**DC**		24, 12, 6, 5, 3	24, 12
	AC 50/60 Hz		100, 110, 200, 220	
Allowable voltage			±10% of the rated voltage*	
Power consumption (W) Note 2)	**DC**		0.35 {With light: 0.4 (DIN terminal with light: 0.45)}	
Apparent power (VA) Note 2)	**AC**	**100 V**	0.78 (With light: 0.81)	0.78 (With light: 0.87)
		110 V [115 V]	0.86 (With light: 0.89) [0.94 (With light: 0.97)]	0.86 (With light: 0.97) [0.94 (With light: 1.07)]
		200 V	1.18 (With light: 1.22)	1.15 (With light: 1.30)
		220 V [230 V]	1.30 (With light: 1.34) [1.42 (With light: 1.46)]	1.27 (With light: 1.46) [1.39 (With light: 1.60)]
Surge voltage suppressor			Diode (DIN terminal, Varistor when non-polar types)	
Indicator light			LED (Neon light when AC with DIN terminal)	

* Based on IEC60529
* In common between 110 VAC and 115 VAC, and between 220 VAC and 230 VAC.
* For 115 VAC and 230 VAC, the allowable voltage is –15% to +5% of rated voltage.

Note 1) Impact resistance: No malfunction occurred when it is tested in the axial direction and at the right angles to the main valve and armature in both energized and de-energized states every once for each condition. (Values at the initial period)
Vibration resistance: No malfunction occurred in a one-sweep test between 45 and 2000 Hz. The test was performed at both energized and de-energized states in the axial direction and at the right angles to the main valve and armature. (Values at the initial period)

Note 2) At the rated voltage.

Standard Stroke

Bore size (mm)	Standard stroke (mm) Note)
20	25, 50, 75, 100, 125, 150 200, 250, 300
25	
32	
40	

Note) Other intermediate strokes can be manufactured upon receipt of order.
Although it is possible to make up to 1000 stroke length, when exceeding the standard stroke, there may be the case which cannot meet the specifications.

Rod Boot Material

Symbol	Rod boot material	Maximum ambient temperature
J	Nylon tarpaulin	70°C
K	Heat resistant tarpaulin	110°C *

* Maximum ambient temperature for the rod boot itself.

Weight

(kg)

Bore size (mm)		20	25	32	40
Basic weight	Basic type	0.22	0.29	0.36	0.64
	Axial foot type	0.37	0.45	0.52	0.91
	Flange type	0.28	0.38	0.45	0.76
	Single clevis type	0.26	0.33	0.40	0.73
	Double clevis type	0.27	0.35	0.41	0.77
	Trunnion type	0.26	0.36	0.42	0.74
Additional weight per each 50 mm of stroke		0.05	0.07	0.09	0.14
Option bracket	Single knuckle joint	0.06	0.06	0.06	0.23
	Double knuckle joint (with pin)	0.07	0.07	0.07	0.20

Calculation: (Example) **CVM5KL32-100-11G**
- Basic weight ····· 0.52 (Axial foot type ø32) • Additional weight ····· 0.09/50 st
- Cylinder stroke ····· 100 (st)
  0.52 + 0.09 x 100/50 = 0.70 kg
- Add 0.03 kg for the DIN terminal.
- Add 0.02 kg for the double solenoids.
- Add 0.03 kg for the closed center and exhaust center.

Mounting Bracket Part No.

Bore size (mm)	20	25	32	40
Axial foot *	CM-L020B	CM-L032B		CM-L040B
Flange	CM-F020B	CM-F032B		CM-F040B
Single clevis	CM-C020B	CM-C032B		CM-C040B
Double clevis **	CM-D020B	CM-D032B		CM-D040B
Trunnion (With nut)	CM-T020B	CM-T032B		CM-T040B

* Two foot brackets and a mounting nut are attached. When ordering the foot bracket, order 2 pcs. per cylinder.
** Clevis pin and snap ring (cotter pin for ø40) are packaged together.

Mounting Bracket and Accessory

Mounting \ Accessory	Standard equipment			Option			
	Mounting nut	Rod end nut	Clevis pin	Single knuckle joint	Double[3] knuckle joint	Pivot[5] bracket	Pivot[6] bracket pin
Basic type	● (1 pc.)	●	—	●	●	—	—
Axial foot type	● (2)	●	—	●	●		
Rod side flange type	● (1)	●	—	●	●		
Head side flange type	● (1)	●	—	●	●		
Single clevis type	— [1]	●	—	●	●	●	●
Double clevis type [3]	— [1]	●	● [4]	●	●	—	—
Head side trunnion type	● (1) [2]	●	—	●	●	●	—
Rod side trunnion type	● (1) [2]	●	—	●	●		

Note 1) Mounting nut is not equipped with single clevis type and double clevis type.
Note 2) Trunnion nuts are equipped for head side trunnion and rod side trunnion.
Note 3) Pin and set ring are shipped together with double clevis and double knuckle joint.
Note 4) Retaining rings (cotter pins for ø40) are included in clevis pins.
Note 5) Pin and retaining ring are not included in pivot bracket.
Note 6) Retaining rings are included in pivot bracke pin.

Accessory (Option)

* Refer to page 1190 for part numbers and dimensions of the single knuckle joint, double knuckle joint, clevis pin, knuckle pin, rod end nut, mounting nut, and trunnion nut.
* Refer to page 255 of the CM2-Z series catalog for the part numbers and external dimensions of the pivot bracket and pivot bracket pin as well as for the dimensions when the cylinder is mounted.

⚠ Precautions

Be sure to read this before handling the products. Refer to page 9 for safety instructions, pages 10 to 19 for actuator and auto switch precautions, and 3/4/5 port solenoid valve precautions on the SMC website: https://www.smcworld.com

Precautions

⚠ Warning

1. Do not rotate the cover.
If a cover is rotated when installing a cylinder or screwing a fitting into the port, it is likely to damage the junction part with cover.

⚠ Caution

1. Avoid using the air cylinder in such a way that rotational torque would be applied to the piston rod.
If rotational torque is applied, the non-rotating guide will deform, causing a loss of non-rotating accuracy. Also, to screw a bracket or a nut onto the threaded portion at the end of the piston rod, make sure to retract the piston rod entirely, and place a wrench on the parallel sections of the rod that protrudes. To tighten, take precautions to prevent the tightening torque from being applied to the non-rotating guide.

Allowable rotational torque (N·m or less)	ø20	ø25	ø32	ø40
	0.2	0.25	0.25	0.44

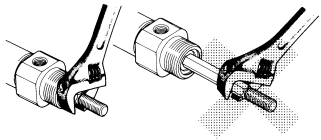

Disassembly/Replacement

⚠ Caution

1. When replacing rod seals, please contact SMC.
Air leakage may be happened, depending on the position in which a rod seal is fitted. Thus, please contact SMC when replacing them.

2. Not able to disassemble.
Since the cover and the cylinder tube are combined by crimping method, it is impossible to disassemble it. Therefore, the internal parts of a cylinder other than rod seal cannot be replaced at all.

3. Do not touch the cylinder during operation.
If the cylinder is operating at a high frequency, be aware that the cylinder tube surface could become very hot, creating the risk of burns.

4. Conjoin the rod end part, so that rod boot might not be twisted.
If a cylinder were installed with its rod boot being twisted, the rod boot could be damaged during operation.

Model Selection

⚠ Warning

1. Confirm the specifications.
Products in this catalog are designed to be used for compressed air systems. If not operated within the designated pressure or temperature, it may damage the products or cause malfunction. (Refer to specifications.)

2. Energizing continuously for a long period of time
When the valve is continuously energized for a long period of time, the performance may deteriorate, shorten the service life or affect peripheral equipment adversely since temperature rises when coils generate heat.

Construction

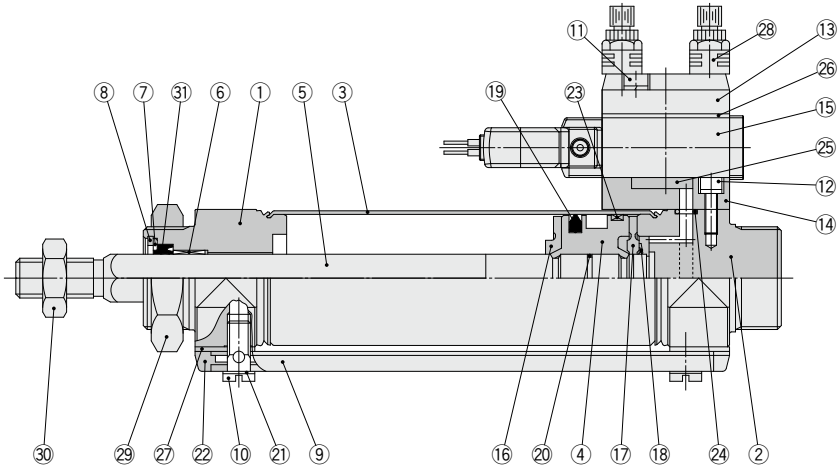

DIN terminal

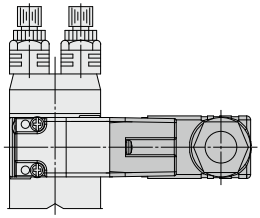

Built-in One-touch fitting

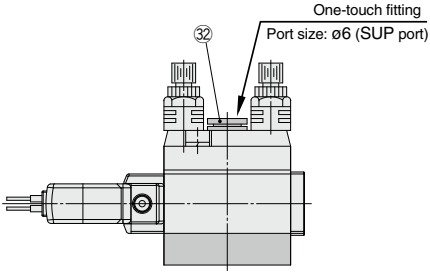

Component Parts

No.	Description	Material	Note
1	**Rod cover**	Aluminum alloy	Anodized
2	**Head cover**	Aluminum alloy	Anodized
3	**Cylinder tube**	Stainless steel	
4	**Piston**	Aluminum alloy	
5	**Piston rod**	Stainless steel	
6	**Non-rotating guide**	Bearing alloy	
7	**Seal retainer**	Rolled steel	Nickel plated
8	**Retaining ring**	Carbon steel	Phosphate coated
9	**Pipe**	Aluminum alloy	
10	**Stud**	Brass	Electroless nickel plated
11	**Hex. socket head cap screw with spring washer**	Stainless steel	
12	**Hex. socket head cap screw with spring washer**	Stainless steel	
13	**Plate**	Aluminum alloy	Metallic painted
14	**Sub-plate**	Aluminum alloy	Metallic painted
15	**Solenoid valve**	—	Refer to the "How to order" below.*
16	**Bumper A**	Urethane	
17	**Bumper B**	Urethane	

∗ How to order solenoid valves

SYJ5 □ 9 0 - □□□□

Type of actuation · Rated voltage · Manual override · Electrical entry · Light/Surge voltage suppressor

Nil	Valves other than those below
–Q	All valves with a DC rated voltage
	Valves with an AC rated voltage (DIN terminal only)

Component Parts

No.	Description	Material	Note
18	**Retaining ring**	Stainless steel	
19	**Piston seal**	NBR	
20	**Piston gasket**	NBR	
21	**Gasket**	Resin	
22	**Pipe gasket**	Urethane rubber	
23	**Wear ring**	Resin	
24	**Head cover gasket**	NBR	
25	**Sub-plate gasket**	NBR	
26	**Gasket**	NBR	
27	**Spacer gasket**	Resin	Except ø25
28	**Exhaust throttle with silencer**	—	ASN2-M5
29	**Mounting nut**	Carbon steel	Nickel plated
30	**Rod end nut**	Carbon steel	Zinc chromated
32	**One-touch fitting**	—	Port size: ø6

Replacement Parts/Seal Kit

No.	Description	Material	Part no.			
			20	**25**	**32**	**40**
31	**Rod seal**	NBR	CM2K20-PS	CM2K25-PS	CM2K32-PS	CM2K40-PS

∗ Since the seal kit does not include a grease pack, order it separately.
Grease pack part no.: GR-S-010 (10g)

Basic Type (B): External Dimensions

CVM5KB Bore size — Stroke

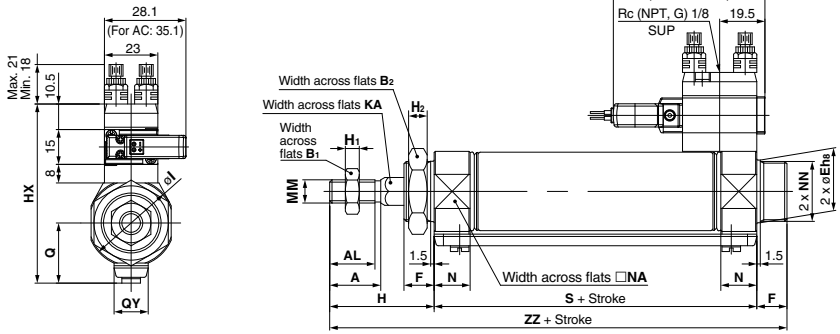

Built-in One-touch fitting

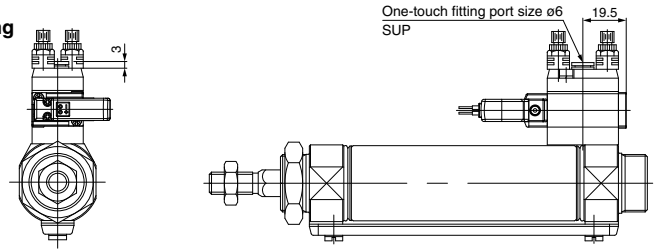

With rod boot

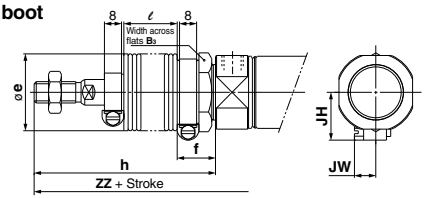

For DIN terminal and double solenoid, refer to page 1184.

(mm)

Bore size (mm)	Stroke range	A	AL	B_1	B_2	Eh_8	F	Q	QY	H	H_1	H_2	HX	I	KA	MM	N	NA	NN	S	ZZ
20	Up to 300	18	15.5	13	26	$20^{0}_{-0.033}$	13	19.8	14	41	5	8	65.3	28	8.2	M8 x 1.25	15	24	M20 x 1.5	62	116
25	Up to 300	22	19.5	17	32	$26^{0}_{-0.033}$	13	22	14	45	6	8	70.5	33.5	10.2	M10 x 1.25	15	30	M26 x 1.5	62	120
32	Up to 300	22	19.5	17	32	$26^{0}_{-0.033}$	13	25.8	16	45	6	8	76.5	37.5	12.2	M10 x 1.25	15	34.5	M26 x 1.5	64	122
40	Up to 300	24	21	22	41	$32^{0}_{-0.039}$	16	29.8	16	50	8	10	84.5	46.5	14.2	M14 x 1.5	21.5	42.5	M32 x 2	88	154

With Rod Boot

(mm)

Bore size (mm)	B_3	e	f	h					ℓ					JH	JW
				1 to 50	51 to 100	101 to 150	151 to 200	201 to 300	1 to 50	51 to 100	101 to 150	151 to 200	201 to 300	(Reference)	(Reference)
20	30	36	18	68	81	93	106	131	12.5	25	37.5	50	75	23.5	10.5
25	32	36	18	72	85	97	110	135	12.5	25	37.5	50	75	23.5	10.5
32	32	36	18	72	85	97	110	135	12.5	25	37.5	50	75	23.5	10.5
40	41	46	20	77	90	102	115	140	12.5	25	37.5	50	75	27	10.5

(mm)

Bore size (mm)	ZZ				
	1 to 50	51 to 100	101 to 150	151 to 200	201 to 300
20	143	156	168	181	206
25	147	160	172	185	210
32	149	162	174	187	212
40	181	194	206	219	244

CVM5 Series
Accessory dimensions

Single Knuckle Joint Mounting (mm)

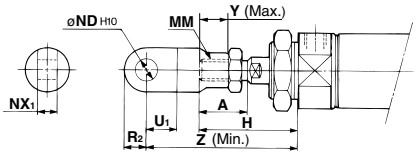

Bore size	A	H	MM	ND_{H10}	NX_1	U_1	R_2	Y	Z
20	18	41	M8 x 1.25	9 $^{+0.058}_{0}$	9 $^{-0.1}_{-0.2}$	14	10	11	66
25, 32	22	45	M10 x 1.25	9 $^{+0.058}_{0}$	9 $^{-0.1}_{-0.2}$	14	10	14	69
40	24	50	M14 x 1.5	12 $^{+0.070}_{0}$	16 $^{-0.1}_{-0.3}$	20	14	13	92

Single Knuckle Joint (mm)

I-020B, 032B Material: Rolled steel **I-040B** Material: Free cutting sulfur steel

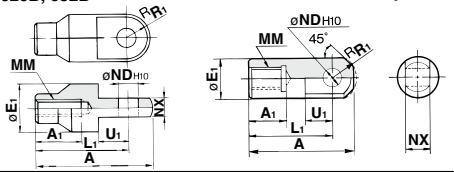

Part no.	Applicable bore size	A	A_1	E_1	L_1	MM	ND_{H10}	NX	R_1	U_1
I-020B	**20**	46	16	20	36	M8 x 1.25	9 $^{+0.058}_{0}$	9 $^{-0.1}_{-0.2}$	10	14
I-032B	**25, 32**	48	18	20	38	M10 x 1.25	9 $^{+0.058}_{0}$	9 $^{-0.1}_{-0.2}$	10	14
I-040B	**40**	69	22	24	55	M14 x 1.5	12 $^{+0.070}_{0}$	16 $^{-0.1}_{-0.3}$	15.5	20

Double Knuckle Joint Mounting (mm)

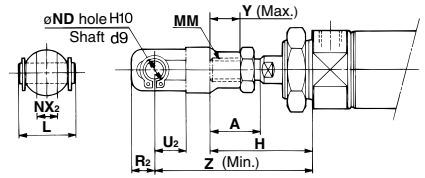

Bore size	A	H	L	MM	ND	NX_2	R_2	U_2	Y	Z
20	18	41	25	M8 x 1.25	9	9 $^{+0.2}_{+0.1}$	10	14	11	66
25, 32	22	45	25	M10 x 1.25	9	9 $^{+0.2}_{+0.1}$	10	14	14	69
40	24	50	49.7	M14 x 1.5	12	16 $^{+0.3}_{+0.1}$	13	25	13	92

Double Knuckle Joint (mm)

Y-020B, Y-032B Material: Rolled steel **Y-040B** Material: Cast iron

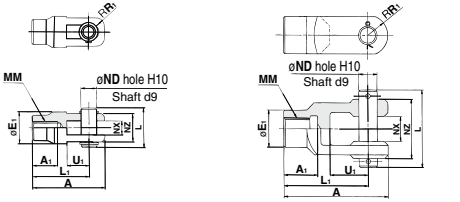

Part no.	Applicable cylinder bore size	A	A_1	E_1	L	L_1	MM	ND
Y-020B	20	46	16	20	25	36	M8 x 1.25	9
Y-032B	25, 32	48	18	20	25	38	M10 x 1.25	9
Y-040B	40	68	22	24	49.7	55	M14 x 1.5	12

Part no.	NX	NZ	R_1	U_1	Applicable pin par no.	Retaining ring Cotter pin size
Y-020B	9 $^{+0.2}_{+0.1}$	18	5	14	CDP-1	Type C9 for shaft
Y-032B	9 $^{+0.2}_{+0.1}$	18	5	14	CDP-1	Type C9 for shaft
Y-040B	16 $^{+0.3}_{+0.1}$	38	13	25	CDP-3	ø3 x 18ℓ

∗ Knuckle pins and retaining rings (cotter pins for ø40) are included.

Double Clevis Pin/Material: Carbon steel (mm)

Bore size: ø20, ø25, ø32

CDP-1

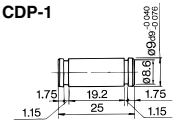

Retaining ring: Type C9 for shaft

∗ Retaining rings (cotter pins for ø40) are included.

Bore size: ø40

CDP-2

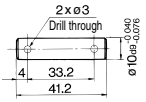

Cotter pins used
ø3 x 18ℓ

Double Knuckle Pin/Material: Carbon steel (mm)

Bore size: ø20, ø25, ø32

CDP-1

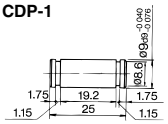

Retaining ring: Type C9 for shaft

∗ Retaining rings (cotter pins for ø40) are included.

Bore size: ø40

CDP-3

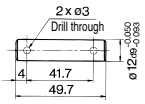

Cotter pins used
ø3 x 18ℓ

Rod End Nut (mm)

Material: Carbon steel

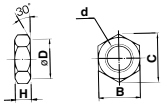

Part no.	Applicable bore size	B	C	D	d	H
NT-02	**20**	13	15.0	12.5	M8 x 1.25	5
NT-03	**25, 32**	17	19.6	16.5	M10 x 1.25	6
NT-04	**40**	22	25.4	21.0	M14 x 1.5	8

Mounting Nut (mm)

Material: Carbon steel

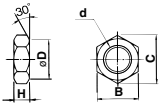

Part no.	Applicable bore size	B	C	D	d	H
SN-020B	**20**	26	30	25.5	M20 x 1.5	8
SN-032B	**25, 32**	32	37	31.5	M26 x 1.5	8
SN-040B	**40**	41	47.3	40.5	M32 x 2.0	10

Trunnion Nut (mm)

Material: Carbon steel

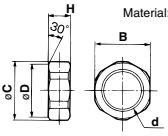

Part no.	Applicable bore size	B	C	D	d	H
TN-020B	**20**	26	28	25.5	M20 x 1.5	10
TN-032B	**25, 32**	32	34	31.5	M26 x 1.5	10
TN-040B	**40**	41	45	40.5	M32 x 2	10

Auto Switch Mounting 1

Auto Switch Proper Mounting Position (Detection at Stroke End) and Mounting Height

Reed auto switch

D-A9□

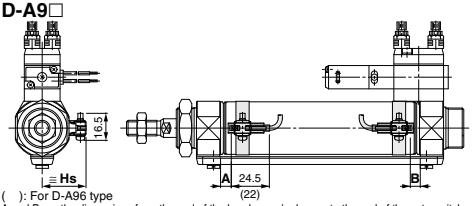

( ): For D-A96 type
A and B are the dimensions from the end of the end of the cover/rod cover to the end of the auto switch.

D-C7/C8

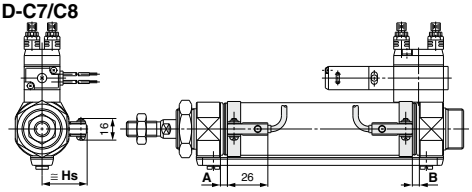

D-B5/B6/B59W

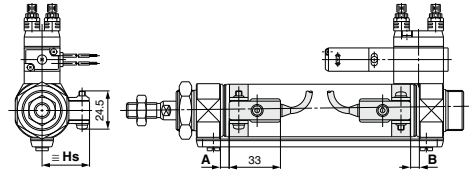

D-C73C/C80C

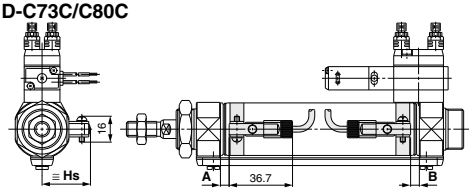

Solid state auto switch

D-M9□/D-M9□W

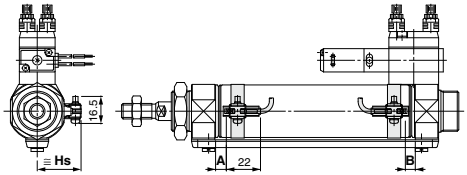

D-H7□/H7□W/H7NF

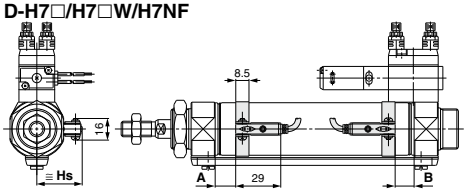

D-G5NT

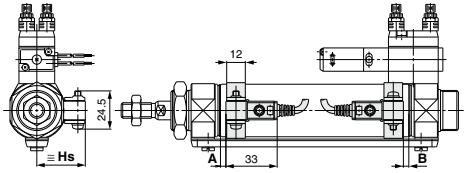

D-H7C

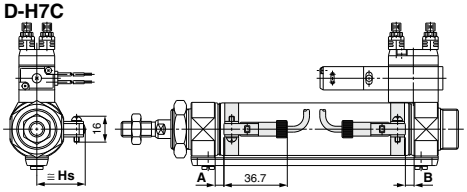

Auto Switch Proper Mounting Position (Detection at Stroke End) and Mounting Height

Auto Switch Proper Mounting Position

(mm)

Auto switch model / Bore size (mm)	D-A9□(V)		D-M9□(V) D-M9□W(V) D-A9□A(V)		D-B5□ D-B64		D-C7□ D-C80 D-C73C D-C80C		D-B59W		D-H7□ D-H7C D-H7□W D-H7NF		D-G5NT	
	A	B	A	B	A	B	A	B	A	B	A	B	A	B
20	6.5	5.5	10.5	9.5	1	0	7	6	4	3	6	5	2.5	1.5
25	6.5	5.5	10.5	9.5	1	0	7	6	4	3	6	5	2.5	1.5
32	7.5	6.5	11.5	10.5	2	1	8	7	5	4	7	6	3.5	2.5
40	13.5	11.5	17.5	15.5	7	6	13	12	10	9	12	11	8.5	7.5

Note) Adjust the auto switch after confirming the operating conditions in the actual setting.

Auto Switch Mounting Height

(mm)

Auto switch model / Bore size (mm)	D-A9□(V) D-M9□(V) D-M9□W(V) D-M9□A(V)	D-B5□ D-B64 D-B59W D-G5NT D-H7C	D-C7□ D-C80 D-H7□ D-H7□W D-H7NF	D-C73C D-C80C
	Hs	Hs	Hs	Hs
20	23	25.5	22.5	25
25	25.5	28	25	27.5
32	29	31.5	28.5	31
40	33	35.5	32.5	35

Auto Switch Mounting 2

Minimum Auto Switch Mounting Stroke

n: No. of auto switches (mm)

Auto switch model	No. of auto switch mounted				
	1	2		n	
		Different surfaces	Same surface	Different surfaces	Same surface
D-A9□ **D-M9□** **D-M9□W**	10	15 Note 1)	45 Note 1)	$15 + 45\frac{(n-2)}{2}$ (n = 2, 4, 6···) Note 2)	45 + 45 (n - 2) (n = 2, 3, 4, 5···)
D-M9□V	5	20	35	$20 + 35\frac{(n-2)}{2}$ (n = 2, 4, 6···) Note 2)	35 + 35 (n - 2) (n = 2, 3, 4, 5···)
D-A9□V	5	15	25	$15 + 35\frac{(n-2)}{2}$ (n = 2, 4, 6···) Note 2)	25 + 35 (n - 2) (n = 2, 3, 4, 5···)
D-M9□WV **D-M9□AV**	10	20	35	$20 + 35\frac{(n-2)}{2}$ (n = 2, 4, 6···) Note 2)	35 + 35 (n - 2) (n = 2, 3, 4, 5···)
D-C7□ **D-C80**	10	15	50	$15 + 45\frac{(n-2)}{2}$ (n = 2, 4, 6···) Note 2)	50 + 45 (n - 2) (n = 2, 3, 4, 5···)
D-H7□ **D-H7□W** **D-H7NF**	10	15	60	$15 + 45\frac{(n-2)}{2}$ (n = 2, 4, 6···) Note 2)	60 + 45 (n - 2) (n = 2, 3, 4, 5···)
D-C73C **D-C80C** **D-H7C**	10	15	65	$15 + 50\frac{(n-2)}{2}$ (n = 2, 4, 6···) Note 2)	65 + 50 (n - 2) (n = 2, 3, 4, 5···)
D-B5□/B64 **D-G5NT**	10	15	75	$15 + 50\frac{(n-2)}{2}$ (n = 2, 4, 6···) Note 2)	75 + 55 (n - 2) (n = 2, 3, 4, 5···)
D-B59W	15	20	75	$20 + 50\frac{(n-2)}{2}$ (n = 2, 4, 6···) Note 2)	75 + 55 (n - 2) (n = 2, 3, 4, 5···)

Note 2) When "n" is an odd number, an even number that is one larger than this odd number is used for the calculation.

Note 1) Auto switch mounting (The adjustment as shown in the figures below is required with the following stroke ranges.)

Auto switch model	With 2 auto switches	
	Different surfaces Note 1)	Same surface Note 1)
	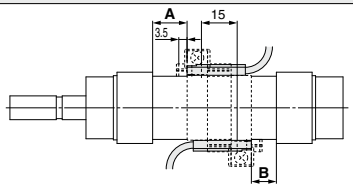 The proper auto switch mounting position is 6 mm inward from the switch holder edge.	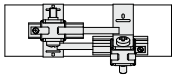 The auto switch is mounted by slightly displacing it in a direction (cylinder tube circumferential exterior) so that the auto switch and lead wire do not interfere with each other.
D-A93	—	45 to less than 50 stroke
D-M9□ **D-M9□W**	15 to less than 20 stroke	45 to less than 55 stroke

Operating Range

(mm)

Auto switch model	Bore size (mm)			
	20	**25**	**32**	**40**
D-A9□(V)	6	6	6	6
D-M9□(V)/M9□W(V) **D-M9□A(V)**	3.5	3	3.5	3
D-C7□/C80 **D-C73C/C80C**	7	8	8	8
D-B5□/B64	8	8	9	9
D-B59W	12	12	13	13
D-H7□/H7□W **D-G5NT/H7NF**	4	4	4.5	5
D-H7C	7	8.5	9	10

∗ Since the operating range is provided as a guideline including hysteresis, it cannot be guaranteed (assuming approximately ±30% dispersion). It may vary substantially depending on an ambient environment.

Auto Switch Mounting Bracket: Part No.

Auto switch mounting	Bore size (mm)			
	ø20	**ø25**	**ø32**	**ø40**
D-M9□(V) **D-M9□W(V)** **D-A9□(V)**	Note 1) BM5-020 (A set of a, b, c, d)	Note 1) BM5-025 (A set of a, b, c, d)	Note 1) BM5-032 (A set of a, b, c, d)	Note 1) BM5-040 (A set of a, b, c, d)
D-M9□A(V) Note 2)	BM5-020S (A set of b, c, e, f)	BM5-025S (A set of b, c, e, f)	BM5-032S (A set of b, c, e, f)	BM5-040S (A set of b, c, e, f)
D-H7□ **D-H7□W** **D-H7NF** **D-C7□/C80** **D-C73C/C80C**	BM2-020A (A set of c and d)	BM2-025A (A set of c and d)	BM2-032A (A set of c and d)	BM2-040A (A set of c and d)
D-B5□/B64 **D-B59W** **D-G5NT**	BA2-020 (A set of c and d)	BA2-025 (A set of c and d)	BA2-032 (A set of c and d)	BA2-040 (A set of c and d)

Note 1) Since the switch bracket (made from nylon) are affected in an environment where alcohol, chloroform, methylamines, hydrochloric acid or sulfuric acid is splashed over, so it cannot be used. Please consult SMC regarding other chemicals.

Note 2) When mounting a D-M9□A(V) type auto switch, if the switch bracket is mounted on the indicator light, it may damage the auto switch. Therefore, be sure to avoid mounting the switch bracket on the indicator light.

[Mounting screw set made of stainless steel]

The following set of mounting screws made of stainless steel is available. Use it in accordance with the operating environment. (Please order the auto switch mounting bracket separately, since it is not included.)

BBA4: For D-C7/C8/H7 types

Note) Refer to page 1440 for the details of BBA4.

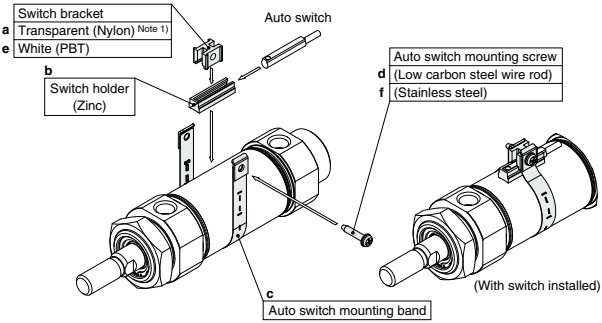

∗ Band (c) is mounted so that the projected part is on the internal side (contact side with the tube).

Besides the models listed in How to Order, the following auto switches are applicable.
Refer to pages 1341 to 1435 for detailed specifications.

Auto switch type	Part no.	Electrical entry (Fetching direction)	Features
Reed	D-B53, C73, C76	Grommet (In-let)	—
	D-C80		Without indicator light
Solid state	D-H7A1, H7A2, H7B		—
	D-H7NW, H7PW, H7BW		Diagnostic indication (2-color)
	D-G5NT		With timer

∗ For solid state auto switches, auto switches with a pre-wired connector are also available. Refer to pages 1410 and 1411 for details.

∗ Normally closed (NC = b contact) solid state auto switches (D-M9□E(V)) are also available. Refer to page 1360 for details.

Valve Mounted Cylinder
Single Acting, Spring Return/Extend
CVM3 Series
ø20, ø25, ø32, ø40

How to Order

Mounting type

B	Basic type
L	Axial foot type
F	Rod side flange type
G	Head side flange type
C	Single clevis type
D	Double clevis type
T	Head side trunnion type
U	Rod side trunnion type

Bore size

20	20 mm
25	25 mm
32	32 mm
40	40 mm

DC

5	24 VDC
6	12 VDC
V	6 VDC
S	5 VDC
R	3 VDC

∗ For the DC specification DIN terminal, only 24 and 12 VDC are available.

Rated voltage AC (50/60 Hz)

1	100 VAC
2	200 VAC
3	110 VAC [115 VAC]
4	220 VAC [230 VAC]

Action

S	Single acting, Spring return
T	Single acting, Spring extend

Light/Surge voltage suppressor

Electrical entry for G, L, M

Nil	Without light/surge voltage suppressor
S	With surge voltage suppresor
Z	With light/surge voltage suppressor
R	With surge voltage suppressor (Non-polar type)
U	With light/surge voltage suppressor (Non-polar type)

∗ For AC voltage valves there is no "S" option. It is already built-in to the rectifier circuit.
∗ For type "R" and "U", DC voltage is only available.

Electrical entry for D

Nil	Without light/surge voltage suppressor
S	With surge voltage suppressor (Non-polar type)
Z	With light/surge voltage suppressor (Non-polar type)

∗ For AC voltage valves there is no "S" option. It is already built-in to the rectifier circuit.

Manual override

Nil	Non-locking push type
D	Push-turn locking slotted type
E	Push-turn locking lever type

CVM3 L 32 □ □ – 100 T – 1 G Z □ – □

With auto switch: CDVM3 L 32 □ □ – 100 T – 1 G Z □ – M9BW □ – C – □

With auto switch (Built-in magnet)

Port thread type

Nil	Rc
TN	NPT
TF	G

Built-in Magnet Cylinder Model

If a built-in magnet cylinder without an auto switch is required, there is no need to enter the symbol for the auto switch.
(Example) CDVM3B25-150S-5G

Piping

Nil	Screw-in type
F	Built-in One-touch fitting

Cylinder stroke (mm)
(Refer to "Standard Stroke" on page 1195.)

Electrical entry

G	Grommet
L	L plug connector
M	M plug connector
D	DIN terminal

Auto switch

Nil	Without auto switch

∗ For the applicable auto switch model, refer to the table below.

Number of auto switches

Nil	2 pcs.
S	1 pc.
n	"n" pcs.

Made to Order
Refer to page 1195 for details.

Auto switch mounting bracket Note)
Note) This symbol is indicated when the D-A9□ or M9□ type auto switch is specified. This mounting bracket does not apply to other auto switches (D-C7□ and H7□, etc.) (Nil)

Applicable Auto Switches/Refer to pages 1341 to 1435 for further information on auto switches.

Type	Special function	Electrical entry	Indicator light	Wiring (Output)	Load voltage DC		Load voltage AC	Auto switch model Perpendicular	Auto switch model In-line	Lead wire length (m) 0.5 (Nil)	1 (M)	3 (L)	5 (Z)	None (N)	Pre-wired connector	Applicable load	
Solid state auto switch	—	Grommet	Yes	3-wire (NPN)	24 V	5 V, 12 V	—	M9NV	M9N	●	●	●	○	—	○	IC circuit	Relay, PLC
				3-wire (PNP)				M9PV	M9P	●	●	●	○	—	○		
				2-wire		12 V		M9BV	M9B	●	●	●	○	—	○	—	
		Connector						—	H7C	●	—	●	●	●	—		
	Diagnostic indication (2-color indicator)			3-wire (NPN)		5 V, 12 V		M9NWV	M9NW	●	●	●	○	—	○	IC circuit	
				3-wire (PNP)				M9PWV	M9PW	●	●	●	○	—	○		
				2-wire		12 V		M9BWV	M9BW	●	●	●	○	—	○	—	
	Water resistant (2-color indicator)			3-wire (NPN)		5 V, 12 V		M9NAV∗1	M9NA∗1	○	○	●	○	—	○	IC circuit	
				3-wire (PNP)				M9PAV∗1	M9PA∗1	○	○	●	○	—	○		
				2-wire		12 V		M9BAV∗1	M9BA∗1	○	○	●	○	—	○	—	
	With diagnostic output (2-color indicator)			4-wire (NPN)		5 V, 12 V		—	H7NF	●	—	●	○	—	○	IC circuit	
Reed auto switch	—	Grommet	Yes	3-wire (NPN equivalent)	—	5 V	—	A96V	A96	●	—	●	—	—	—	IC circuit	—
			None	2-wire	24 V	12 V	100 V	A93V∗2	A93	●	●	●	●	—	—	—	Relay, PLC
			Yes				100 V or less	A90V	A90	●	—	●	—	—	—	IC circuit	
			None				100 V, 200V	—	B54	●	—	●	●	—	—	—	
			Yes				200 V or less	—	B64	●	—	●	—	—	—		
		Connector	Yes				—	—	C73C	●	—	●	●	●	—		
			None				24 V or less	—	C80C	●	—	●	●	●	—	IC circuit	
	Diagnostic indication (2-color indicator)	Grommet	Yes			—	—	—	B59W	●	—	●	—	—	—	—	

∗ Lead wire length symbols: 0.5 m ····· Nil (Example) M9NW
1 m ····· M (Example) M9NWM
3 m ····· L (Example) M9NWL
5 m ····· Z (Example) M9NWZ
None ····· N (Example) H7CN

∗ Solid state auto switches marked with "○" are produced upon receipt of order.
∗1 Water resistant type auto switches can be mounted on the above models, but in such case SMC cannot guarantee water resistance. Consult with SMC regarding water resistant types with the above model numbers.
∗2 1 m type lead wire is only applicable to D-A93.

∗ Since there are other applicable auto switches than listed, refer to page 1215 for details.
∗ For details about auto switches with pre-wired connector, refer to pages 1410 and 1411.
∗ D-A9□/M9□ auto switches are shipped together (not assembled). (Only auto switch mounting brackets are assembled before shipped.)

An auto switch cylinder with the switch installed can also be manufactured.

Symbol
Rubber bumper

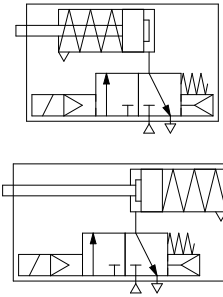

Made to Order Specifications
Click here for details

Symbol	Specifications
-XA□	Change of rod end shape

Refer to pages 1212 to 1215 for cylinders with auto switches.

- Proper auto switch mounting position (detection at stroke end) and mounting height
- Minimum auto switch mounting stroke
- Operating range
- Auto switch mounting bracket: Part no.

Specifications

Applicable bore size (mm)		20	25	32	40
Action		Single acting, Spring return/Spring extend			
Fluid		Air			
Cushion		Rubber bumper			
Proof pressure		1.0 MPa			
Maximum operating pressure		0.7 MPa			
Minimum operating pressure		0.18 MPa Spring return		0.23 MPa Spring extend	
Ambient and fluid temperature		–10 to 50°C (No freezing)			
Lubrication		Not required (Non-lube)			
Stroke length tolerance		$^{+1.4}_{0}$			
Piping	**Screw-in type**	Rc 1/8			
	Built-in One-touch fitting	O.D.: ø6/I.D.: ø4			
Manual override		Non locking (Standard)			
Allowable kinetic energy		0.27 J	0.4 J	0.65 J	1.2 J
Mounting		Basic type, Axial foot type, Rod side flange type, Head side flange type, Single clevis type, Double clevis type, Head side trunnion type, Rod side trunnion type			

Solenoid Valve Specifications

Series			SYJ519	
Manual override			Non-locking push type, Push-turn locking slotted type, Push-turn locking lever type	
Pilot exhaust			Pilot valve individual exh. Type	
Impact/Vibration resistance (m/s²) Note 1)			150/30	
Enclosure			Dustproof	
Electrical entry			Grommet (G), L plug connector (L), M plug connector (M), DIN terminal (D)	
			G, L, M	D
Coil rated voltage (V)	**DC**		24, 12, 6, 5, 3	24, 12
	AC 50/60 Hz		100, 110, 200, 220	
Allowable voltage			±10% of the rated voltage*	
Power consumption (W) Note 2)	**DC**		0.35 {With light: 0.4 (DIN terminal with light: 0.45)}	
Apparent power (VA) Note 2)	**AC**	**100 V**	0.78 (With light: 0.81)	0.78 (With light: 0.87)
		110 V [115 V]	0.86 (With light: 0.89) [0.94 (With light: 0.97)]	0.86 (With light: 0.97) [0.94 (With light: 1.07)]
		200 V	1.18 (With light: 1.22)	1.15 (With light: 1.30)
		220 V [230 V]	1.30 (With light: 1.34) [1.42 (With light: 1.46)]	1.27 (With light: 1.46) [1.39 (With light: 1.60)]
Surge voltage suppressor			Diode (DIN terminal, Varistor when non-polar types)	
Indicator light			LED (Neon light when AC with DIN terminal)	

* Based on IEC60529
* In common between 110 VAC and 115 VAC, and between 220 VAC and 230 VAC.
* For 115 VAC and 230 VAC, the allowable voltage is –15% to +5% of rated voltage.

Note 1) Impact resistance: No malfunction occurred when it is tested in the axial direction and at the right angles to the main valve and armature in both energized and de-energized states every once for each condition. (Values at the initial period)
Vibration resistance: No malfunction occurred in a one-sweep test between 45 and 2000 Hz. The test was performed at both energized and de-energized states in the axial direction and at the right angles to the main valve and armature. (Values at the initial period)
Note 2) At the rated voltage.

Standard Stroke

Bore size (mm)	Standard stroke (mm) Note)
20	25, 50, 75, 100, 125, 150 *
25	25, 50, 75, 100, 125, 150 *
32	25, 50, 75, 100, 125, 150, 200 *
40	25, 50, 75, 100, 125, 150, 200, 250 *

Note 1) Intermediate stroke except mentioned above is produced upon receipt of order.
Note 2) Strokes marked with "*" are the maximum strokes which are available.

Theoretical Output

Refer to the Technical Data (Theoretical Output 1) in the **Web Catalog**.

Spring Reaction Force

Refer to the Technical Data (Table 2: Spring Reaction Force) in the **Web Catalog**.

Mounting Bracket and Accessory

Mounting \ Accessory	Standard equipment			Option			
	Mounting nut	Rod end nut	Clevis pin	Single knuckle joint	Double knuckle joint (3)	Pivot bracket (5)	Pivot bracket pin (6)
Basic type	● (1 pc.)	●	—	●	●	—	—
Axial foot type	● (2)	●	—	●	●		
Rod side flange type	● (1)	●	—	●	●		
Head side flange type	● (1)	●	—	●	●		
Single clevis type	— (1)	●	—	●	●	●	●
Double clevis type (3)	— (1)	●	● (4)	●	●	—	—
Head side trunnion type	● (1) (2)	●	—	●	●	●	—
Rod side trunnion type	● (1) (2)	●	—	●	●		

Note 1) Mounting nut is not equipped with single clevis type and double clevis type.
Note 2) Trunnion nuts are equipped for head side trunnion and rod side trunnion.
Note 3) Pin and retaining ring are shipped together with double clevis and double knuckle joint.
Note 4) Retaining rings (cotter pins for ø40) are included in clevis pins.
Note 5) Pin and retaining ring are not included in pivot bracket.
Note 6) Retaining rings are included in pivot bracket pin.

Accessory Bracket

Further information on accessories are the same specifications as these of the standard double acting single rod. Refer to page 1190.

Manual Operation

Manual operation is possible by pushing the manual button indicated with the arrow.

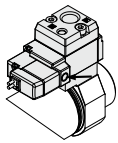

Weight

Spring Return/( ): Denotes Spring Extend.

(kg)

	Bore size (mm)	20	25	32	40
Basic weight	25 stroke	0.27 (0.27)	0.37 (0.37)	0.49 (0.48)	0.84 (0.83)
	50 stroke	0.29 (0.29)	0.40 (0.40)	0.53 (0.53)	0.91 (0.90)
	75 stroke	0.34 (0.34)	0.49 (0.48)	0.65 (0.63)	1.10 (1.06)
	100 stroke	0.36 (0.36)	0.52 (0.51)	0.70 (0.67)	1.16 (1.13)
	125 stroke	0.42 (0.41)	0.61 (0.58)	0.83 (0.79)	1.36 (1.30)
	150 stroke	0.44 (0.43)	0.64 (0.61)	0.87 (0.83)	1.43 (1.37)
	200 stroke	—	—	1.03 (0.99)	1.68 (1.60)
	250 stroke	—	—	—	1.94 (1.82)
Mounting bracket weight	Axial foot	0.15 (0.15)	0.16 (0.16)	0.16 (0.16)	0.27 (0.27)
	Flange	0.06 (0.06)	0.09 (0.09)	0.09 (0.09)	0.12 (0.12)
	Single clevis	0.04 (0.04)	0.04 (0.04)	0.04 (0.04)	0.09 (0.09)
	Double clevis	0.05 (0.05)	0.06 (0.06)	0.06 (0.06)	0.13 (0.13)
	Trunnion	0.04 (0.04)	0.07 (0.07)	0.07 (0.07)	0.10 (0.10)
Option bracket	Single knuckle joint	0.06 (0.06)	0.06 (0.06)	0.06 (0.06)	0.23 (0.23)
	Double knuckle (With pin)	0.07 (0.07)	0.07 (0.07)	0.07 (0.07)	0.20 (0.20)

Calculation
(Example) **CVM3L32-100S-1G**
(ø32, 100 stroke, Spring return)
- Basic weight·····0.70 (kg)
- Weight of brackets·····0.16 (kg)
  0.70 + 0.16 = 0.86 kg
- Add 0.03 kg for the DIN terminal.

⚠Precautions

Be sure to read this before handling the products. Refer to page 9 for safety instructions, pages 10 to 19 for actuator and auto switch precautions, and 3/4/5 port solenoid valve precautions on the SMC web site: https://www.smcworld.com

Operating Precautions

⚠ Warning

1. Do not rotate the cover.
If a cover is rotated when installing a cylinder or screwing a fitting into port, it is likely to damage the junction part with cover.

⚠ Caution

1. Not able to disassemble.
Cover and cylinder tube are connected to each other by caulking method, thus making it impossible to disassemble. Therefore, internal parts of a cylinder other than rod seal are not replaceable.

2. Use caution to the popping of a retaining ring.
When replacing rod seals and removing and mounting a retaining ring, use a proper tool (retaining ring plier: tool for installing type C retaining ring). Even if a proper tool is used, it is likely to inflict damage to a human body or peripheral equipment, as a retaining ring may be flown out of the tip of a plier. Be much careful with the popping of a retaining ring. Besides, be certain that a retaining ring is placed firmly into the groove of rod cover before supplying air at the time of installment.

⚠ Caution

3. Do not touch the cylinder during operation.
Use caution when handling a cylinder, which is running at a high speed and a high frequency, because the surface of a cylinder tube could get so hot enough as to cause you get burned.

4. One-touch fitting cannot be replaced.
One-touch fitting is press-fit into the cover, thus cannot be replaced.

Model Selection

⚠ Warning

1. Confirm the specifications.
Products in this catalog are designed to be used for compressed air systems (including vacuum). If not operated within the designated pressure or temperature, it may damage the products or cause malfunction. (Refer to specifications.)

2. Energizing continuously for a long period of time
When the valve is continuously energized for a long period of time, the performance may deteriorate, shorten the service life or affect peripheral equipment adversely since temperature rises when coils generate heat.

Built-in One-touch Fitting

CVM3 [Mounting type] [Bore size] **F** — [For "How to Order", refer to page 1194.]

F: Built-in One-touch fitting

One-touch fittings are installed on cylinders.

For dimensions of each mounting bracket, refer to pages 1200 to 1206.

Specifications

Action	Single acting, Spring return		Single acting, Spring extend	
Bore size (mm)	ø20, ø25, ø32, ø40			
Max. operating pressure	0.7 MPa			
Min. operating pressure	0.18 MPa		0.23 MPa	
Cushion	Rubber bumper			
Piping	Built-in One-touch fitting			
Piston speed (mm/s)	ø20	ø25	ø32	ø40
	50 to 700	50 to 650	50 to 590	50 to 420
Port size (Tube bore size)	O.D.: ø6/I.D.: ø4			
Applicable bore size	Can be used for either nylon, soft nylon or polyurethane tube.			
Mounting	Basic type, Axial foot type, Rod side flange type, Head side flange type, Single clevis type, Double clevis type, Head side trunnion type, Rod side trunnion type			

Mounting Bracket Part No.

Bore size (mm)	20	25	32	40
Axial foot *	CM-L020B	CM-L032B		CM-L040B
Flange	CM-F020B	CM-F032B		CM-F040B
Single clevis	CM-C020B	CM-C032B		CM-C040B
Double clevis **	CM-D020B	CM-D032B		CM-D040B
Trunnion (with nut)	CM-T020B	CM-T032B		CM-T040B

* Two foot brackets and a mounting nut are attached.
When ordering the foot bracket, order 2 pcs. per cylinder.
** Clevis pin and retaining ring (cotter pin for ø40) are packaged together.

Construction

Spring return

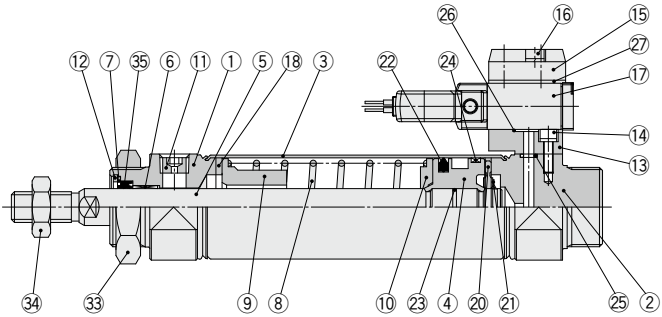

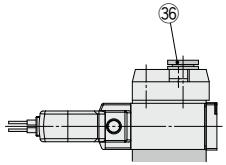

Built-in One-touch fitting

Spring extend

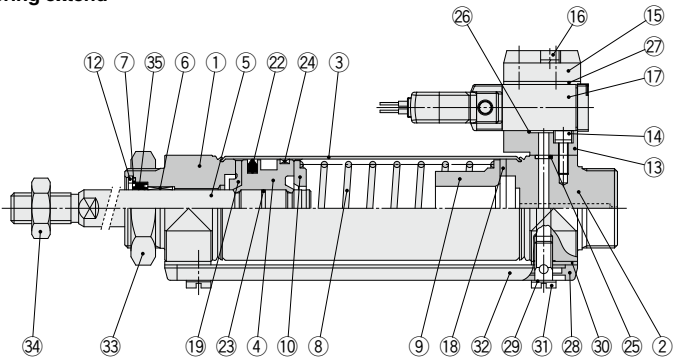

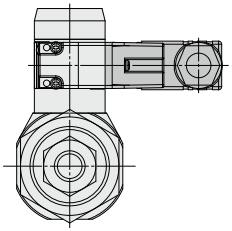

DIN terminal

Component Parts

No.	Description	Material	Note
1	**Rod cover**	Aluminum alloy	Anodized
2	**Head cover**	Aluminum alloy	Anodized
3	**Cylinder tube**	Stainless steel	
4	**Piston**	Aluminum alloy	
5	**Piston rod**	Carbon steel	Hard chromium electroplated
6	**Bushing**	Bearing alloy	
7	**Seal retainer**	Stainless steel	
8	**Return spring**	Steel wire	Zinc chromated
9	**Spring guide**	Aluminum alloy	
10	**Spring seat**	Aluminum alloy	
11	**Plug with fixed orifice**	Alloy steel	Black dyed
12	**Retaining ring**	Carbon steel	Phosphate coated
13	**Sub-plate**	Aluminum alloy	Metallic painted
14	Hex. socket head cap screw with spring washer	Stainless steel	
15	**Plate**	Alloy	Metallic painted
16	Hex. socket head cap screw with spring washer	Stainless steel	
17	**Solenoid valve**	—	Refer to "How to order" below.*
18	**Bumper**	Urethane	
19	**Bumper A**	Urethane	

* How to order solenoid valves

SYJ519 -□□□□□

Rated voltage • Electrical entry • Light/surge voltage suppressor • Manual override

Nil	Valves other than those below
–Q	All valves with a DC rated voltage
	Valves with an AC rated voltage (DIN terminal only)

Component Parts

No.	Description	Material	Note
20	**Bumper B**	Urethane	
21	**Retaining ring**	Stainless steel	
22	**Piston seal**	NBR	
23	**Piston gasket**	NBR	
24	**Wear ring**	Resin	
25	**Head cover gasket**	NBR	
26	**Sub-plate gasket**	NBR	
27	**Gasket**	NBR	
28	**Pipe gasket**	Urethane rubber	
29	**Gasket**	Resin	
30	**Spacer gasket**	Resin	
31	**Stud**	Brass	Electroless nickel plated
32	**Pipe**	Aluminum alloy	
33	**Mounting nut**	Carbon steel	Nickel plated
34	**Rod end nut**	Carbon steel	Zinc chromated
36	**One-touch fitting**	—	Port size: ø6

Replacement Parts/Seal Kit

No.	Description	Material	Part no.			
			20	**25**	**32**	**40**
35	**Rod seal**	NBR	CM220-PS	CM225-PS	CM232-PS	CM240-PS

* Since the seal kit does not include a grease pack, order it separately.
Grease pack part no.: GR-S-010 (10g)

Basic Type (B)

Single acting, Spring return: CVM3B [Bore size] – [Stroke] S

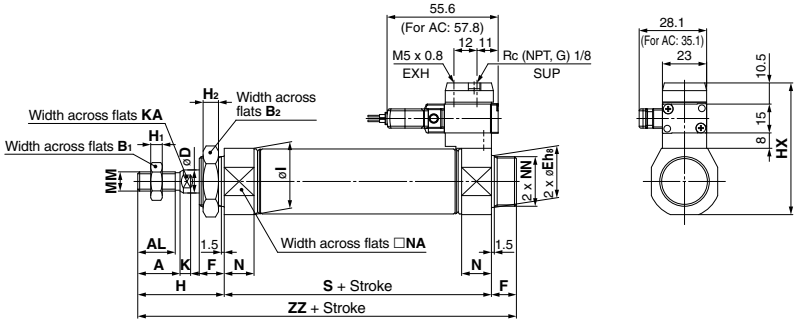

Single acting, Spring extend: CVM3B [Bore size] – [Stroke] T

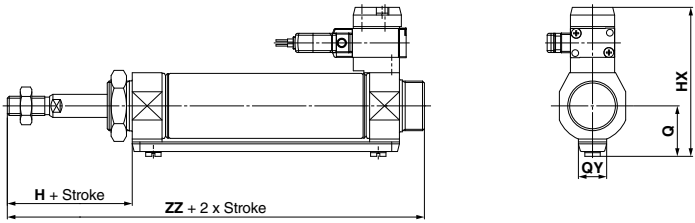

Built-in One-touch fitting

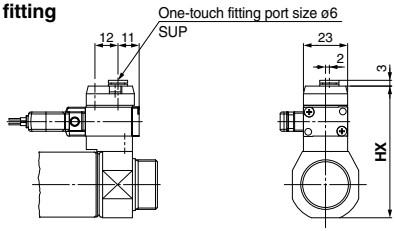

(mm)

Bore size (mm)	A	AL	B_1	B_2	D	Eh_8	F	H	H_1	H_2	HX	I	K	KA	MM	N	NA	NN
20	18	15.5	13	26	8	$20^{0}_{-0.033}$	13	41	5	8	57.5	28	5	6	M8 x 1.25	15	24	M20 x 1.5
25	22	19.5	17	32	10	$26^{0}_{-0.033}$	13	45	6	8	63.5	33.5	5.5	8	M10 x 1.25	15	30	M26 x 1.5
32	22	19.5	17	32	12	$26^{0}_{-0.033}$	13	45	6	8	68	37.5	5.5	10	M10 x 1.25	15	34.5	M26 x 1.5
40	24	21	22	41	14	$32^{0}_{-0.039}$	16	50	8	10	76	46.5	7	12	M14 x 1.5	21.5	42.5	M32 x 2

Dimensions by Stroke

(mm)

Bore size (mm) \ Stroke / Symbol	1 to 50		51 to 100		101 to 150		151 to 200		201 to 250	
	S	ZZ	S	ZZ	S	ZZ	S	ZZ	S	ZZ
20	87	141	112	166	137	191	—	—	—	—
25	87	145	112	170	137	195	—	—	—	—
32	89	147	114	172	139	197	164	222	—	—
40	113	179	138	204	163	229	188	254	213	279

Single Acting/Spring Extend (mm)

Bore size (mm)	HX	Q	QY
20	65.3	19.8	14
25	70.5	22	14
32	76.5	25.8	16
40	84.5	29.8	16

Axial Foot Type (L)

Single acting, Spring return: CVM3L Bore size – Stroke S

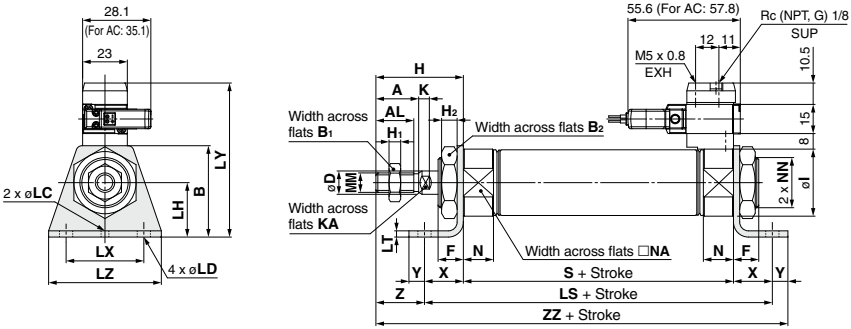

Single acting, Spring extend: CVM3L Bore size – Stroke T

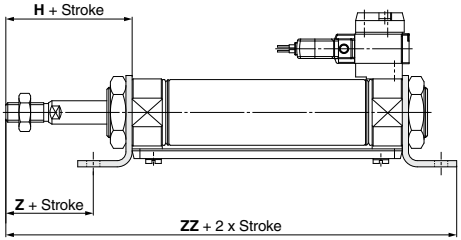

(mm)

Bore size (mm)	A	AL	B	B_1	B_2	D	F	H	H_1	H_2	I	K	KA	LC	LD	LH	LT	LX	LY	LZ	MM	N	NA
20	18	15.5	40	13	26	8	13	41	5	8	28	5	6	4	6.8	25	3.2	40	70.5	55	M8 x 1.25	15	24
25	22	19.5	47	17	32	10	13	45	6	8	33.5	5.5	8	4	6.8	28	3.2	40	76.5	55	M10 x 1.25	15	30
32	22	19.5	47	17	32	12	13	45	6	8	37.5	5.5	10	4	6.8	28	3.2	40	78.8	55	M10 x 1.25	15	34.5
40	24	21	54	22	41	14	16	50	8	10	46.5	7	12	4	7	30	3.2	55	84.8	75	M14 x 1.5	21.5	42.5

(mm)

Bore size (mm)	NN	X	Y	Z
20	M20 x 1.5	20	8	21
25	M26 x 1.5	20	8	25
32	M26 x 1.5	20	8	25
40	M32 x 2	23	10	27

∗ Brackets are packaged together.

Dimensions by Stroke

(mm)

Bore size (mm) \ Stroke / Symbol	1 to 50			51 to 100			101 to 150			151 to 200			201 to 250		
	S	**LS**	**ZZ**	**S**	**LS**	**ZZ**	**S**	**LS**	**ZZ**	**S**	**LS**	**ZZ**	**S**	**LS**	**ZZ**
20	87	127	156	112	152	181	137	177	206	—	—	—	—	—	—
25	87	127	160	112	152	185	137	177	210	—	—	—	—	—	—
32	89	129	162	114	154	187	139	179	212	164	204	237	—	—	—
40	113	159	196	138	184	221	163	209	246	188	234	271	213	259	296

Rod Side Flange Type (F)

Single acting, Spring return: CVM3F [Bore size] – [Stroke] S

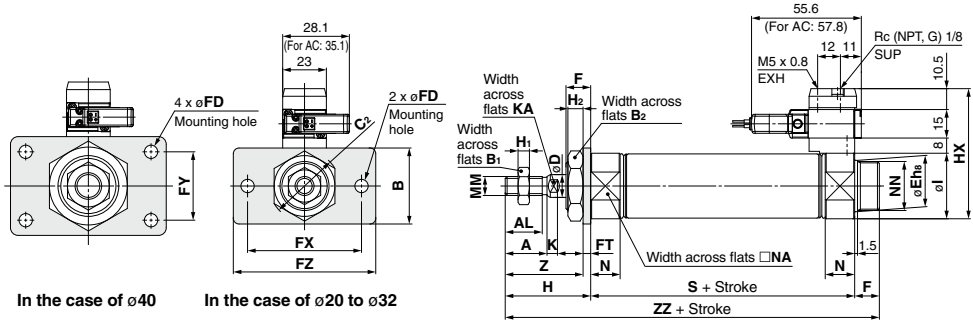

In the case of ø40 In the case of ø20 to ø32

Single acting, Spring extend: CVM3F [Bore size] – [Stroke] T

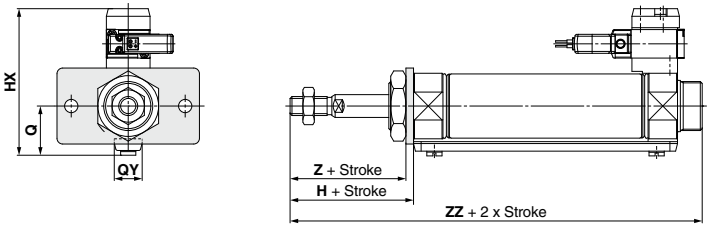

(mm)

Bore size (mm)	A	AL	B	B_1	B_2	C_2	D	Eh_8	F	FD	FT	FX	FY	FZ	H	H_1	H_2	HX	I	K	KA
20	18	15.5	34	13	26	30	8	$20^{0}_{-0.033}$	13	7	4	60	—	75	41	5	8	57.5	28	5	6
25	22	19.5	40	17	32	37	10	$26^{0}_{-0.033}$	13	7	4	60	—	75	45	6	8	63.5	33.5	5.5	8
32	22	19.5	40	17	32	37	12	$26^{0}_{-0.033}$	13	7	4	60	—	75	45	6	8	68	37.5	5.5	10
40	24	21	52	22	41	47.3	14	$32^{0}_{-0.039}$	16	7	5	66	36	82	50	8	10	76	46.5	7	12

(mm)

Bore size (mm)	MM	N	NA	NN	Z
20	M8 x 1.25	15	24	M20 x 1.5	37
25	M10 x 1.25	15	30	M26 x 1.5	41
32	M10 x 1.25	15	34.5	M26 x 1.5	41
40	M14 x 1.5	21.5	42.5	M32 x 2	45

∗ Brackets are packaged together.

Dimensions by Stroke

(mm)

Bore size (mm) \ Stroke / Symbol	1 to 50		51 to 100		101 to 150		151 to 200		201 to 250	
	S	ZZ	S	ZZ	S	ZZ	S	ZZ	S	ZZ
20	87	141	112	166	137	191	—	—	—	—
25	87	145	112	170	137	195	—	—	—	—
32	89	147	114	172	139	197	164	222	—	—
40	113	179	138	204	163	229	188	254	213	279

Single Acting/Spring Extend

(mm)

Bore size (mm)	HX	Q	QY
20	65.3	19.8	14
25	70.5	22	14
32	76.5	25.8	16
40	84.5	29.8	16

Head Side Flange Type (G)

Single acting, Spring return: CVM3G Bore size — Stroke S

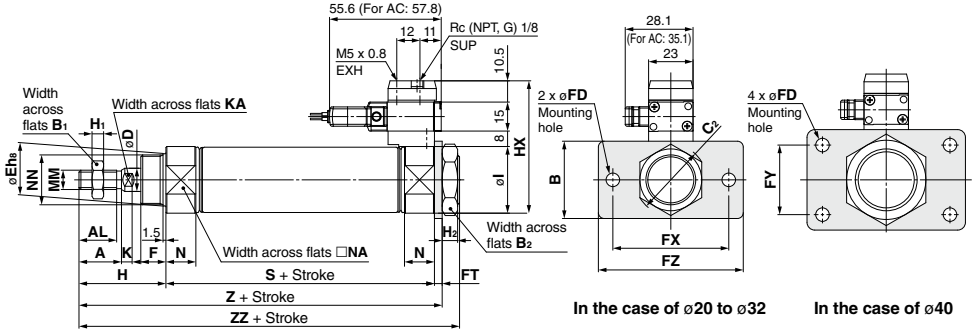

In the case of ø20 to ø32 In the case of ø40

Single acting, Spring extend: CVM3G Bore size — Stroke T

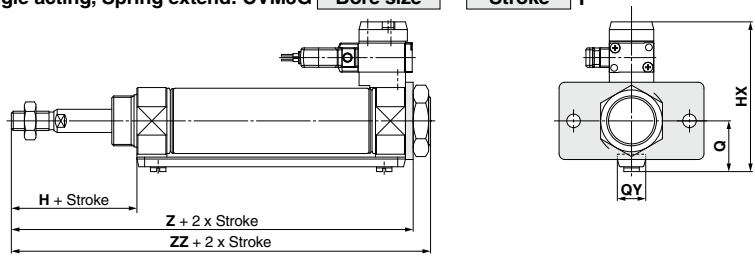

(mm)

Bore size (mm)	A	AL	B	B_1	B_2	C_2	D	Eh_8	F	FD	FT	FX	FY	FZ	H	H_1	H_2	HX	I	K	KA	MM
20	18	15.5	34	13	26	30	8	$20^{0}_{-0.033}$	13	7	4	60	—	75	41	5	8	57.5	28	5	6	M8 x 1.25
25	22	19.5	40	17	32	37	10	$26^{0}_{-0.033}$	13	7	4	60	—	75	45	6	8	63.5	33.5	5.5	8	M10 x 1.25
32	22	19.5	40	17	32	37	12	$26^{0}_{-0.033}$	13	7	4	60	—	75	45	6	8	68	37.5	5.5	10	M10 x 1.25
40	24	21	52	22	41	47.3	14	$32^{0}_{-0.039}$	16	7	5	66	36	82	50	8	10	76	46.5	7	12	M14 x 1.5

(mm)

Bore size (mm)	N	NA	NN
20	15	24	M20 x 1.5
25	15	30	M26 x 1.5
32	15	34.5	M26 x 1.5
40	21.5	42.5	M32 x 2

Dimensions by Stroke

(mm)

Bore size (mm) \ Stroke / Symbol	1 to 50			51 to 100			101 to 150			151 to 200			201 to 250		
	S	Z	ZZ	S	Z	ZZ	S	Z	ZZ	S	Z	ZZ	S	Z	ZZ
20	87	132	141	112	157	166	137	182	191	—	—	—	—	—	—
25	87	136	145	112	161	170	137	186	195	—	—	—	—	—	—
32	89	138	147	114	163	172	139	188	197	164	213	222	—	—	—
40	113	168	179	138	193	204	163	218	229	188	243	254	213	268	279

Single Acting/Spring Extend (mm)

Bore size (mm)	HX	Q	QY
20	65.3	19.8	14
25	70.5	22	14
32	76.5	25.8	16
40	84.5	29.8	16

∗ Brackets are packaged together.

Single Clevis Type (C)

Single acting, Spring return: CVM3C [Bore size] – [Stroke] S

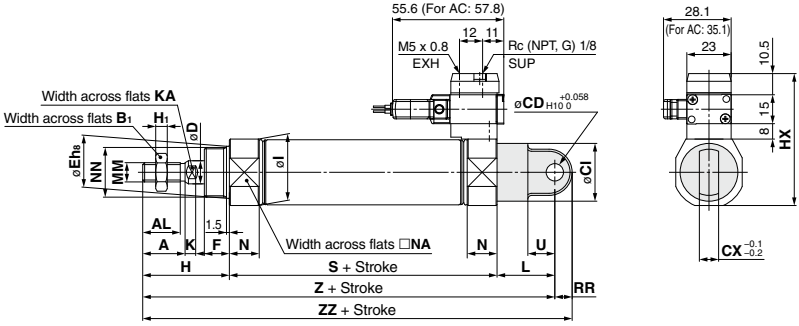

Single acting, Spring extend: CVM3C [Bore size] – [Stroke] T

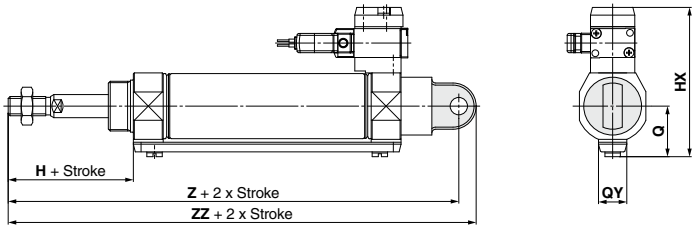

(mm)

Bore size (mm)	A	AL	B1	CD	CI	CX	D	Eh8	F	H	H1	HX	I	K	KA	L	MM	N	NA	NN	RR	U
20	18	15.5	13	9	24	10	8	20 0 −0.033	13	41	5	57.5	28	5	6	30	M8 x 1.25	15	24	M20 x 1.5	9	14
25	22	19.5	17	9	30	10	10	26 0 −0.033	13	45	6	63.5	33.5	5.5	8	30	M10 x 1.25	15	30	M26 x 1.5	9	14
32	22	19.5	17	9	30	10	12	26 0 −0.033	13	45	6	68	37.5	5.5	10	30	M10 x 1.25	15	34.5	M26 x 1.5	9	14
40	24	21	22	10	38	15	14	32 0 −0.039	16	50	8	76	46.5	7	12	39	M14 x 1.5	21.5	42.5	M32 x 2	11	18

Dimensions by Stroke

(mm)

Bore size (mm) \ Stroke / Symbol	1 to 50			51 to 100			101 to 150			151 to 200			201 to 250		
	S	**Z**	**ZZ**	**S**	**Z**	**ZZ**	**S**	**Z**	**ZZ**	**S**	**Z**	**ZZ**	**S**	**Z**	**ZZ**
20	87	158	167	112	183	192	137	208	217	—	—	—	—	—	—
25	87	162	171	112	187	196	137	212	221	—	—	—	—	—	—
32	89	164	173	114	189	198	139	214	223	164	239	248	—	—	—
40	113	202	213	138	227	238	163	252	263	188	277	288	213	302	313

Single Acting/Spring Extend (mm)

Bore size (mm)	HX	Q	QY
20	65.3	19.8	14
25	70.5	22	14
32	76.5	25.8	16
40	84.5	29.8	16

Double Clevis Type (D)

Single acting, Spring return: CVM3D Bore size — Stroke S

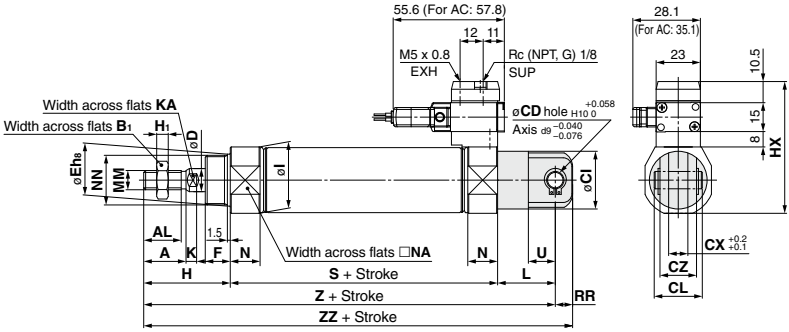

Single acting, Spring extend: CVM3D Bore size — Stroke T

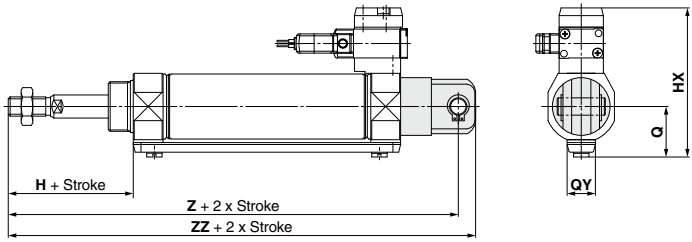

(mm)

Bore size (mm)	A	AL	B1	CD	CI	CL	CX	CZ	D	Eh8	F	H	H1	HX	I	K	KA	L	MM	N	NA	NN	RR	U
20	18	15.5	13	9	24	25	10	19	8	$20^{0}_{-0.033}$	13	41	5	57.5	28	5	6	30	M8 x 1.25	15	24	M20 x 1.5	9	14
25	22	19.5	17	9	30	25	10	19	10	$26^{0}_{-0.033}$	13	45	6	63.5	33.5	5.5	8	30	M10 x 1.25	15	30	M26 x 1.5	9	14
32	22	19.5	17	9	30	25	10	19	12	$26^{0}_{-0.033}$	13	45	6	68	37.5	5.5	10	30	M10 x 1.25	15	34.5	M26 x 1.5	9	14
40	24	21	22	10	38	41.2	15	30	14	$32^{0}_{-0.039}$	16	50	8	76	46.5	7	12	39	M14 x 1.5	21.5	42.5	M32 x 2	11	18

Dimensions by Stroke

(mm)

Bore size (mm) \ Stroke / Symbol	1 to 50			51 to 100			101 to 150			151 to 200			201 to 250		
	S	**Z**	**ZZ**	**S**	**Z**	**ZZ**	**S**	**Z**	**ZZ**	**S**	**Z**	**ZZ**	**S**	**Z**	**ZZ**
20	87	158	167	112	183	192	137	208	217	—	—	—	—	—	—
25	87	162	171	112	187	196	137	212	221	—	—	—	—	—	—
32	89	164	173	114	189	198	139	214	223	164	239	248	—	—	—
40	113	202	213	138	227	238	163	252	263	188	277	288	213	302	313

∗ Clevis pin and snap ring (cotter pin for ø40) is shipped together.

Single Acting/Spring Extend (mm)

Bore size (mm)	HX	Q	QY
20	65.3	19.8	14
25	70.5	22	14
32	76.5	25.8	16
40	84.5	29.8	16

Rod Side Trunnion Type (U)

Single acting, Spring return: CVM3U [Bore size] — [Stroke] S

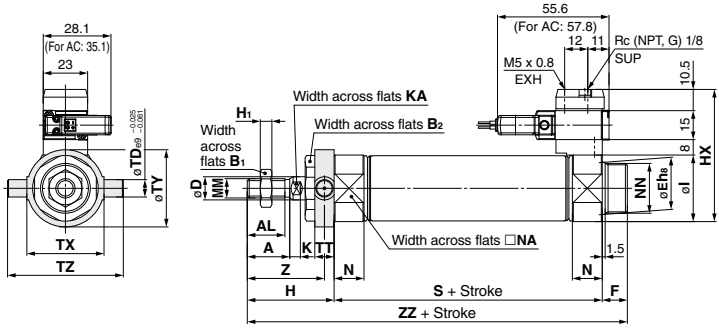

Single acting, Spring extend: CVM3U [Bore size] — [Stroke] T

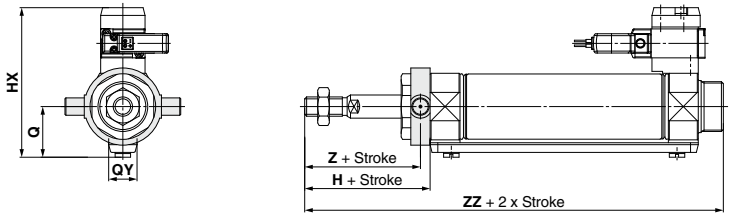

(mm)

Bore size (mm)	A	AL	B_1	B_2	D	Eh_8	F	H	H_1	HX	I	K	KA	MM	N	NA	NN	TD	TT	TX	TY	TZ	Z
20	18	15.5	13	26	8	$20^{0}_{-0.033}$	13	41	5	57.5	28	5	6	M8 x 1.25	15	24	M20 x 1.5	8	10	32	32	52	36
25	22	19.5	17	32	10	$26^{0}_{-0.033}$	13	45	6	63.5	33.5	5.5	8	M10 x 1.25	15	30	M26 x 1.5	9	10	40	40	60	40
32	22	19.5	17	32	12	$26^{0}_{-0.033}$	13	45	6	68	37.5	5.5	10	M10 x 1.25	15	34.5	M26 x 1.5	9	10	40	40	60	40
40	24	21	22	41	14	$32^{0}_{-0.039}$	16	50	8	76	46.5	7	12	M14 x 1.5	21.5	42.5	M32 x 2	10	11	53	53	77	44.5

Dimensions by Stroke

(mm)

Bore size (mm) \ Stroke / Symbol	1 to 50		51 to 100		101 to 150		151 to 200		201 to 250	
	S	ZZ	S	ZZ	S	ZZ	S	ZZ	S	ZZ
20	87	141	112	166	137	191	—	—	—	—
25	87	145	112	170	137	195	—	—	—	—
32	89	147	114	172	139	197	164	222	—	—
40	113	179	138	204	163	229	188	254	213	279

∗ Brackets are packaged together.

Single Acting/Spring Extend (mm)

Bore size (mm)	HX	Q	QY
20	65.3	19.8	14
25	70.5	22	14
32	76.5	25.8	16
40	84.5	29.8	16

Head Side Trunnion Type (T)

Single acting, Spring return: CVM3T Bore size — Stroke S

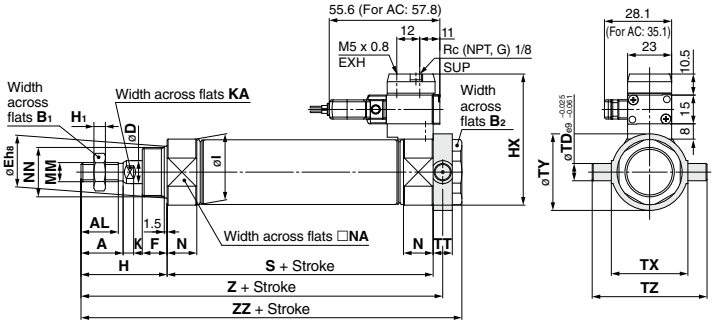

Single acting, Spring extend: CVM3T Bore size — Stroke T

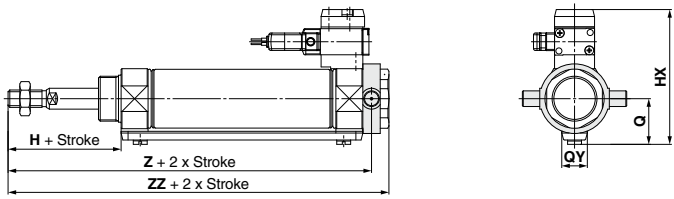

(mm)

Bore size (mm)	A	AL	B_1	B_2	D	Eh_8	F	H	H_1	HX	I	K	KA	MM	N	NA	NN	TD	TT	TX	TY	TZ
20	18	15.5	13	26	8	$20^{0}_{-0.033}$	13	41	5	57.5	28	5	6	M8 x 1.25	15	24	M20 x 1.5	8	10	32	32	52
25	22	19.5	17	32	10	$26^{0}_{-0.033}$	13	45	6	63.5	33.5	5.5	8	M10 x 1.25	15	30	M26 x 1.5	9	10	40	40	60
32	22	19.5	17	32	12	$26^{0}_{-0.033}$	13	45	6	68	37.5	5.5	10	M10 x 1.25	15	34.5	M26 x 1.5	9	10	40	40	60
40	24	21	22	41	14	$32^{0}_{-0.039}$	16	50	8	76	46.5	7	12	M14 x 1.5	21.5	42.5	M32 x 2	10	11	53	53	77

Dimensions by Stroke

(mm)

Bore size (mm) \ Stroke / Symbol	1 to 50			51 to 100			101 to 150			151 to 200			201 to 250		
	S	Z	ZZ	S	Z	ZZ	S	Z	ZZ	S	Z	ZZ	S	Z	ZZ
20	87	133	143	112	158	168	137	183	193	—	—	—	—	—	—
25	87	137	147	112	162	172	137	187	197	—	—	—	—	—	—
32	89	139	149	114	164	174	139	189	199	164	214	224	—	—	—
40	113	168.5	179	138	193.5	204	163	218.5	229	188	243.5	254	213	268.5	279

∗ Brackets are packaged together.

Single Acting/Spring Extend (mm)

Bore size (mm)	HX	Q	QY
20	65.3	19.8	14
25	70.5	22	14
32	76.5	25.8	16
40	84.5	29.8	16

Valve Mounted Cylinder: Non-rotating Rod Type
Single Acting, Spring Return/Extend
CVM3K Series
ø20, ø25, ø32, ø40

How to Order

Mounting type

B	Basic type
L	Axial foot type
F	Rod side flange type
G	Head side flange type
C	Single clevis type
D	Double clevis type
T	Head side trunnion type
U	Rod side trunnion type

Bore size

20	20 mm
25	25 mm
32	32 mm
40	40 mm

DC

5	24 VDC
6	12 VDC
V	6 VDC
S	5 VDC
R	3 VDC

∗ For the DC specification DIN terminal, only 24 and 12 VDC are available.

Rated voltage AC (50/60 Hz)

1	100 VAC
2	200 VAC
3	110 VAC [115 VAC]
4	220 VAC [230 VAC]

Action

S	Single acting, Spring return
T	Single acting, Spring extend

Light/Surge voltage suppressor
Electrical entry for G, L, M

Nil	Without light/surge voltage suppressor
S	With surge voltage suppresor
Z	With light/surge voltage suppressor
R	With surge voltage suppressor (Non-polar type)
U	With light/surge voltage suppressor (Non-polar type)

∗ For AC voltage valves there is no "S" option. It is already built-in to the rectifier circuit.
∗ For type "R" and "U", DC voltage is only available.

Electrical entry for D

Nil	Without light/surge voltage suppressor
S	With surge voltage suppressor (Non-polar type)
Z	With light/surge voltage suppressor (Non-polar type)

∗ For AC voltage valves there is no "S" option. It is already built-in to the rectifier circuit.

Manual override

Nil	Non-locking push type
D	Push-turn locking slotted type
E	Push-turn locking lever type

CVM3K L 20 □ □ – 100 T – 1 G Z □ – □

With auto switch: CDVM3K L 20 □ □ – 100 T – 1 G Z □ – M9BW □ – C – □

With auto switch (Built-in magnet)

Non-rotating rod type

Port thread type

Nil	Rc
TN	NPT
TF	G

Built-in Magnet Cylinder Model

If a built-in magnet cylinder without an auto switch is required, there is no need to enter the symbol for the auto switch.
(Example) CDVM3KB40-100S-5G

Piping

Nil	Screw-in type
F	Built-in One-touch fitting

Cylinder stroke (mm)
(Refer to "Standard Stroke" on page 1208.)

Electrical entry

G	Grommet
L	L plug connector
M	M plug connector
D	DIN terminal

Auto switch

Nil	Without auto switch

∗ For the applicable auto switch model, refer to the table below.

Number of auto switches

Nil	2 pcs.
S	1 pc.
n	"n" pcs.

Made to Order
Refer to page 1208 for details.

Auto switch mounting bracket Note)
Note) This symbol is indicated when the D-A9□ or M9□ type auto switch is specified. This mounting bracket does not apply to other auto switches (D-C7□ and H7□, etc.) (Nil)

Applicable Auto Switches/Refer to pages 1341 to 1435 for further information on auto switches.

Type	Special function	Electrical entry	Indicator light	Wiring (Output)	Load voltage DC	Load voltage DC	Load voltage AC	Auto switch model Perpendicular	Auto switch model In-line	Lead wire length (m) 0.5 (Nil)	1 (M)	3 (L)	5 (Z)	None (N)	Pre-wired connector	Applicable load	
Solid state auto switch	—	Grommet	Yes	3-wire (NPN)	24 V	5 V, 12 V	—	M9NV	M9N	●	●	●	○	—	○	IC circuit	Relay, PLC
				3-wire (PNP)				M9PV	M9P	●	●	●	○	—	○		
				2-wire		12 V		M9BV	M9B	●	●	●	○	—	○	—	
		Connector						—	H7C	●	—	●	●	●	—		
	Diagnostic indication (2-color indicator)	Grommet		3-wire (NPN)		5 V, 12 V		M9NWV	M9NW	●	●	●	○	—	○	IC circuit	
				3-wire (PNP)				M9PWV	M9PW	●	●	●	○	—	○		
				2-wire		12 V		M9BWV	M9BW	●	●	●	○	—	○	—	
	Water resistant (2-color indicator)			3-wire (NPN)		5 V, 12 V		M9NAV∗1	M9NA∗1	○	○	●	○	—	○	IC circuit	
				3-wire (PNP)				M9PAV∗1	M9PA∗1	○	○	●	○	—	○		
				2-wire		12 V		M9BAV∗1	M9BA∗1	○	○	●	○	—	○	—	
	With diagnostic output (2-color indicator)			4-wire (NPN)		5 V, 12 V		—	H7NF	●	—	●	○	—	○	IC circuit	
Reed auto switch	—	Grommet	Yes	3-wire (NPN equivalent)	—	5 V	—	A96V	A96	●	—	●	—	—	—	IC circuit	—
				2-wire	24 V	12 V	100 V	A93V∗2	A93	●	●	●	●	—	—	—	Relay, PLC
			None				100 V or less	A90V	A90	●	—	●	—	—	—	IC circuit	
			Yes				100 V, 200 V	—	B54	●	—	●	●	—	—	—	
			None				200 V or less	—	B64	●	—	●	—	—	—		
		Connector	Yes				—	—	C73C	●	—	●	●	●	—		
			None				24 V or less	—	C80C	●	—	●	●	●	—	IC circuit	
	Diagnostic indication (2-color indicator)	Grommet	Yes			—	—	—	B59W	●	—	●	—	—	—	—	

∗ Lead wire length symbols: 0.5 m ····· Nil (Example) M9NW
1 m ····· M (Example) M9NWM
3 m ····· L (Example) M9NWL
5 m ····· Z (Example) M9NWZ
None ····· N (Example) H7CN

∗ Solid state auto switches marked with "○" are produced upon receipt of order.
∗ D-A9□V□/M9□V□/M9□WV□/M9□A(V) types cannot be mounted.
∗1 Water resistant type auto switches can be mounted on the above models, but in such case SMC cannot guarantee water resistance. Consult with SMC regarding water resistant types with the above model numbers.
∗2 1 m type lead wire is only applicable to D-A93.

∗ Since there are other applicable auto switches than listed, refer to page 1215 for details.
∗ For details about auto switches with pre-wired connector, refer to pages 1410 and 1411.
∗ D-A9□/M9□/M9□W auto switches are shipped together (not assembled). (Only auto switch mounting brackets are assembled before shipped.)

A hexagon shaped rod that does not rotate.

Non-rotating accuracy
ø20, ø25 — ±0.7°
ø32, ø40 — ±0.5°

Can operate without lubrication.

Auto switches can also be mounted.

Can be installed with auto switches to facilitate the detection of the cylinder's stroke position.

Symbol
Rubber bumper

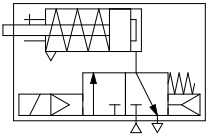

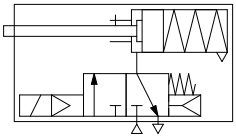

Made to Order

Made to Order Specifications
Click here for details

Symbol	Specifications
-XA□	Change of rod end shape

Specifications

Applicable bore size (mm)		20	25	32	40
Rod non-rotating accuracy		±0.7°		±0.5°	
Action		Single acting, Spring return/Spring extend			
Fluid		Air			
Cushion		Rubber bumper			
Proof pressure		1.0 MPa			
Maximum operating pressure		0.7 MPa			
Minimum operating pressure		0.18 MPa spring return		0.23 MPa spring extend	
Ambient and fluid temperature		–10 to 50°C (No freezing)			
Lubrication		Not required (Non-lube)			
Stroke length tolerance		$^{+1.4}_{0}$			
Piping	**Screw-in type**	Rc 1/8			
	Built-in One-touch fitting	O.D.: ø6/I.D.: ø4			
Piston speed (mm/s)		50 to 700	50 to 650	50 to 590	50 to 420
Allowable kinetic energy		0.27 J	0.4 J	0.65 J	1.2 J
Mounting		Basic type, Axial foot type, Rod side flange type, Head side flange type, Single clevis type, Double clevis type, Head side trunnion type, Rod side trunnion type			

Solenoid Valve Specifications

Series			SYJ519	
Manual override			Non-locking push type, Push-turn locking slotted type, Push-turn locking lever type	
Pilot exhaust			Pilot valve individual exh. Type	
Impact/Vibration resistance (m/s²) Note 1)			150/30	
Enclosure			Dustproof	
Electrical entry			Grommet (G), L plug connector (L), M plug connector (M), DIN terminal (D)	
			G, L, M	D
Coil rated voltage (V)	**DC**		24, 12, 6, 5, 3	24, 12
	AC 50/60 Hz		100, 110, 200, 220	
Allowable voltage			±10% of the rated voltage*	
Power consumption (W) Note 2)	**DC**		0.35 {With light: 0.4 (DIN terminal with light: 0.45)}	
Apparent power (VA) Note 2)	**AC**	**100 V**	0.78 (With light: 0.81)	0.78 (With light: 0.87)
		110 V [115 V]	0.86 (With light: 0.89) [0.94 (With light: 0.97)]	0.86 (With light: 0.97) [0.94 (With light: 1.07)]
		200 V	1.18 (With light: 1.22)	1.15 (With light: 1.30)
		220 V [230 V]	1.30 (With light: 1.34) [1.42 (With light: 1.46)]	1.27 (With light: 1.46) [1.39 (With light: 1.60)]
Surge voltage suppressor			Diode (DIN terminal, Varistor when non-polar types)	
Indicator light			LED (Neon light when AC with DIN terminal)	

* Based on IEC60529
* In common between 110 VAC and 115 VAC, and between 220 VAC and 230 VAC.
* For 115 VAC and 230 VAC, the allowable voltage is –15% to +5% of rated voltage.

Note 1) Impact resistance: No malfunction occurred when it is tested in the axial direction and at the right angles to the main valve and armature in both energized and de-energized states every once for each condition. (Values at the initial period)
Vibration resistance: No malfunction occurred in a one-sweep test between 45 and 2000 Hz. The test was performed at both energized and de-energized states in the axial direction and at the right angles to the main valve and armature. (Values at the initial period)

Note 2) At the rated voltage.

Standard Stroke

Bore size (mm)	Standard stroke (mm) Note)
20	25, 50, 75, 100, 125, 150 *
25	25, 50, 75, 100, 125, 150 *
32	25, 50, 75, 100, 125, 150, 200 *
40	25, 50, 75, 100, 125, 150, 200, 250 *

Note 1) Intermediate stroke other than above is manufactured upon receipt of order.
Note 2) Strokes marked with "*" are the maximum strokes which are available.

Mounting Bracket Part No.

Bore size (mm)	20	25	32	40
Axial foot*	CM-L020B	CM-L032B		CM-L040B
Flange	CM-F020B	CM-F032B		CM-F040B
Single clevis	CM-C020B	CM-C032B		CM-C040B
Double clevis**	CM-D020B	CM-D032B		CM-D040B
Trunnion (With nut)	CM-T020B	CM-T032B		CM-T040B

* Two foot brackets and a mounting nut are attached.
When ordering the foot bracket, order 2 pcs. per cylinder.
** Clevis pin and retaining ring (cotter pin for ø40) are packaged together.

Refer to pages 1212 to 1215 for cylinders with auto switches.

- Proper auto switch mounting position (detection at stroke end) and mounting height
- Minimum auto switch mounting stroke
- Operating range
- Auto switch mounting bracket: Part no.

Theoretical Output

Refer to the Technical Data (Theoretical Output 1) in the **Web Catalog**.

Spring Reaction Force

Refer to the Technical Data (Table 2: Spring Reaction Force) in the **Web Catalog**.

Mounting Bracket and Accessory

Mounting \ Accessory	Standard equipment			Option			
	Mounting nut	Rod end nut	Clevis pin	Single knuckle joint	Double knuckle joint (3)	Pivot bracket (5)	Pivot bracket pin (6)
Basic type	● (1 pc.)	●	—	●	●	—	—
Axial foot type	● (2)	●	—	●	●		
Rod side flange type	● (1)	●	—	●	●		
Head side flange type	● (1)	●	—	●	●		
Single clevis type	— (1)	●	—	●	●	●	●
Double clevis type (3)	— (1)	●	● (4)	●	●	—	—
Head side trunnion type	● (1) (2)	●	—	●	●	●	—
Rod side trunnion type	● (1) (2)	●	—	●	●		

Note 1) Mounting nut is not equipped with single clevis type and double clevis type.
Note 2) Trunnion nuts are equipped for head side trunnion and rod side trunnion.
Note 3) Pin and retaining ring are shipped together with double clevis and double knuckle joint.
Note 4) Retaining rings (cotter pins for ø40) are included in clevis pins.
Note 5) Pin and retaining ring are not included in pivot bracket.
Note 6) Retaining rings are included in pivot bracket pin.

Weight

Spring Return/( ): Denotes Spring Extend.

(kg)

Bore size (mm)		20	25	32	40
Basic weight	25 stroke	0.27 (0.27)	0.37 (0.37)	0.49 (0.48)	0.84 (0.83)
	50 stroke	0.29 (0.29)	0.40 (0.40)	0.53 (0.53)	0.91 (0.90)
	75 stroke	0.34 (0.34)	0.49 (0.48)	0.65 (0.63)	1.10 (1.06)
	100 stroke	0.36 (0.36)	0.52 (0.51)	0.70 (0.67)	1.16 (1.13)
	125 stroke	0.42 (0.41)	0.61 (0.58)	0.83 (0.79)	1.36 (1.30)
	150 stroke	0.44 (0.43)	0.64 (0.61)	0.87 (0.83)	1.43 (1.37)
	200 stroke	—	—	1.03 (0.99)	1.68 (1.60)
	250 stroke	—	—	—	1.94 (1.82)
Mounting bracket weight	Axial foot	0.15 (0.15)	0.16 (0.16)	0.16 (0.16)	0.27 (0.27)
	Flange	0.06 (0.06)	0.09 (0.09)	0.09 (0.09)	0.12 (0.12)
	Single clevis	0.04 (0.04)	0.04 (0.04)	0.04 (0.04)	0.09 (0.09)
	Double clevis	0.05 (0.05)	0.06 (0.06)	0.06 (0.06)	0.13 (0.13)
	Trunnion	0.04 (0.04)	0.07 (0.07)	0.07 (0.07)	0.10 (0.10)
Option bracket weight	Single knuckle joint	0.06 (0.06)	0.06 (0.06)	0.06 (0.06)	0.23 (0.23)
	Double knuckle (With pin)	0.07 (0.07)	0.07 (0.07)	0.07 (0.07)	0.20 (0.20)

Calculation: (Example) **CVM3KL32-100S-1G** (ø32, 100 stroke, Spring return)
- Basic weight·····0.70 (kg)
- Weight of brackets·····0.16 (kg)
  0.70 + 0.16 = 0.86 kg
- Add 0.03 kg for the DIN terminal.

Manual Operation

Manual operation is possible by pushing the manual button indicated with the arrow.

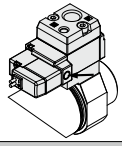

⚠ Precautions

Be sure to read this before handling the products. Refer to page 9 for safety instructions, pages 10 to 19 for actuator and auto switch precautions, and 3/4/5 port solenoid valve precautions on the SMC web site: https://www.smcworld.com

Operating Precautions

⚠Caution

1. Avoid using the air cylinder in such a way that rotational torque would be applied to the piston rod.
If rotational torque is applied, the non-rotating guide will deform, causing a loss of non-rotating accuracy. Also, to screw a bracket or a nut onto the threaded portion at the end of the piston rod, make sure to retract the piston rod entirely, and place a wrench on the parallel sections of the rod that protrudes. To tighten, take precautions to prevent the tightening torque from being applied to the non-rotating guide.

Allowable rotational torque (N·m or less)	ø20	ø25	ø32	ø40
	0.2	0.25	0.25	0.44

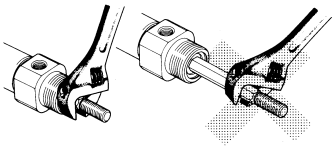

Disassembly/Replacement

⚠Caution

1. When replacing rod seals, please contact SMC.
Air leakage may be happened, depending on the position in which a rod seal is fitted. Thus, please contact SMC when replacing them.

Model Selection

⚠Warning

1. Confirm the specifications.
Products in this catalog are designed to be used for compressed air systems. If not operated within the designated pressure or temperature, it may damage the products or cause malfunction. (Refer to specifications.)

2. Energizing continuously for a long period of time
When the valve is continuously energized for a long period of time, the performance may deteriorate or affect peripheral equipment adversely since temperature rises when coils generate heat.

Construction

Spring return

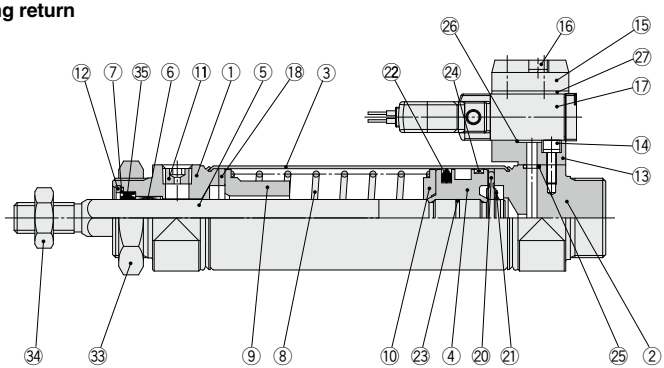

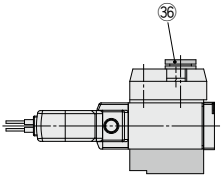

Built-in One-touch fitting

Spring extend

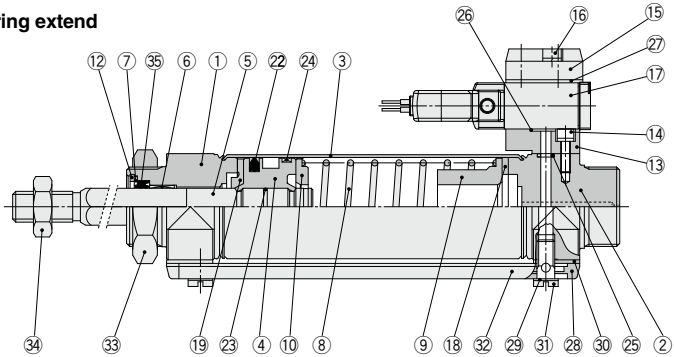

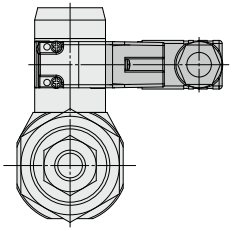

DIN terminal

Component Parts

No.	Description	Material	Note
1	**Rod cover**	Aluminum alloy	Anodized
2	**Head cover**	Aluminum alloy	Anodized
3	**Cylinder tube**	Stainless steel	
4	**Piston**	Aluminum alloy	
5	**Piston rod**	Stainless steel	
6	**Non-rotating guide**	Bearing alloy	
7	**Seal retainer**	Rolled steel	Nickel plated
8	**Return spring**	Steel wire	Zinc chromated
9	**Spring guide**	Aluminum alloy	
10	**Spring seat**	Aluminum alloy	
11	**Plug with fixed orifice**	Alloy steel	Black dyed
12	**Retaining ring**	Carbon steel	Phosphate coated
13	**Sub-plate**	Aluminum alloy	Metallic painted
14	Hex. socket head cap screw with spring washer	Stainless steel	
15	**Plate**	Aluminum alloy	Metallic painted
16	Hex. socket head cap screw with spring washer	Stainless steel	
17	**Solenoid valve**	—	Refer to the below.*
18	**Bumper**	Urethane	
19	**Bumper A**	Urethane	

∗ How to order solenoid valves

SYJ519 -□□□□□

Rated voltage • • Manual override

Electrical entry • • Light/surge voltage suppressor

Nil	Valves other than those below
–Q	All valves with a DC rated voltage
	Valves with an AC rated voltage (DIN terminal only)

Component Parts

No.	Description	Material	Note
20	**Bumper B**	Urethane	
21	**Retaining ring**	Stainless steel	
22	**Piston seal**	NBR	
23	**Piston gasket**	NBR	
24	**Wear ring**	Resin	
25	**Head cover gasket**	NBR	
26	**Sub-plate gasket**	NBR	
27	**Gasket**	NBR	
28	**Pipe gasket**	Urethane rubber	
29	**Gasket**	Resin	
30	**Spacer gasket**	Resin	
31	**Stud**	Brass	Electroless nickel plated
32	**Pipe**	Aluminum alloy	
33	**Mounting nut**	Carbon steel	Nickel plated
34	**Rod end nut**	Carbon steel	Zinc chromated
36	**One-touch fitting**	—	Port size: ø6

Replacement Parts/Seal Kit

No.	Description	Material	Part no.			
			20	**25**	**32**	**40**
35	**Rod seal**	NBR	CM2K20-PS	CM2K25-PS	CM2K32-PS	CM2K40-PS

∗ Since the seal kit does not include a grease pack, order it separately.
Grease pack part no.: GR-S-010 (10g)

Basic Type (B): External Dimensions

Single acting, Spring return: CVM3KB Bore size — Stroke **S**

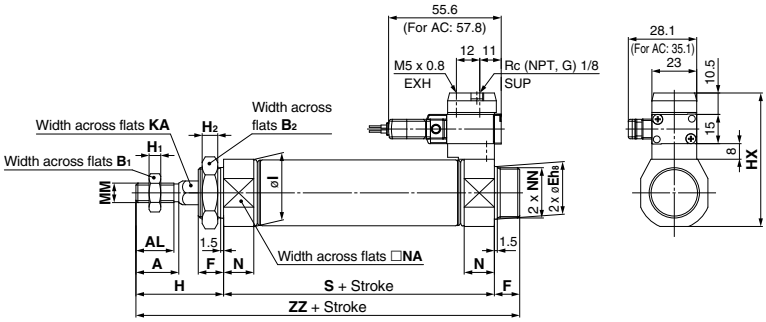

Single acting, Spring extend: CVM3KB Bore size — Stroke **T**

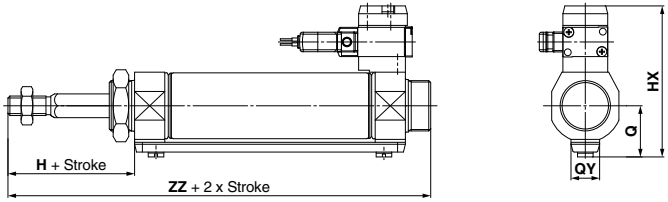

Built-in One-touch fitting

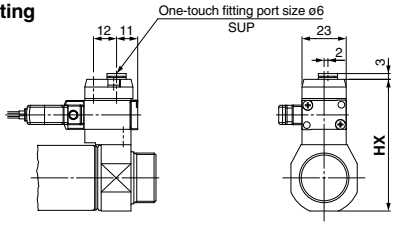

(mm)

Bore size (mm)	A	AL	B_1	B_2	Eh_8	F	H	H_1	H_2	HX	I	KA	MM	N	NA	NN
20	18	15.5	13	26	$20^{0}_{-0.033}$	13	41	5	8	57.5	28	8.2	M8 x 1.25	15	24	M20 x 1.5
25	22	19.5	17	32	$26^{0}_{-0.033}$	13	45	6	8	63.5	33.5	10.2	M10 x 1.25	15	30	M26 x 1.5
32	22	19.5	17	32	$26^{0}_{-0.033}$	13	45	6	8	68	37.5	12.2	M10 x 1.25	15	34.5	M26 x 1.5
40	24	21	22	41	$32^{0}_{-0.039}$	16	50	8	10	76	46.5	14.2	M14 x 1.5	21.5	42.5	M32 x 2

Dimensions by Stroke

(mm)

Bore size (mm) \ Stroke / Symbol	1 to 50		51 to 100		101 to 150		151 to 200		201 to 250	
	S	ZZ	S	ZZ	S	ZZ	S	ZZ	S	ZZ
20	87	141	112	166	137	191	—	—	—	—
25	87	145	112	170	137	195	—	—	—	—
32	89	147	114	172	139	197	164	222	—	—
40	113	179	138	204	163	229	188	254	213	279

Single Acting/Spring Extend

(mm)

Bore size (mm)	HX	Q	QY
20	65.3	19.8	14
25	70.5	22	14
32	76.5	25.8	16
40	84.5	29.8	16

Auto Switch Mounting 1

Auto Switch Proper Mounting Position (Detection at Stroke End) and Its Mounting Height

Reed auto switch

D-A9□

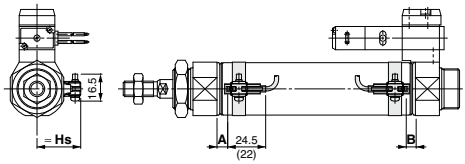

( ): For D-A96 type
A and B are the dimensions from the end of the head cover/rod cover to the end of the auto switch.

D-C7/C8

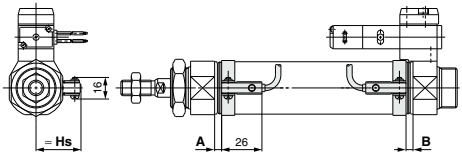

D-B5/B6/B59W

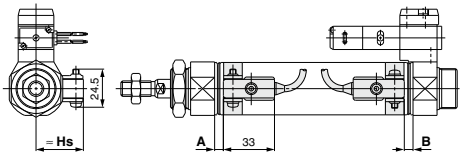

D-C73C/C80C

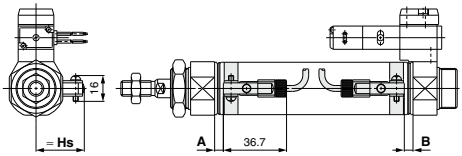

Solid state auto switch

D-M9□
D-M9□W

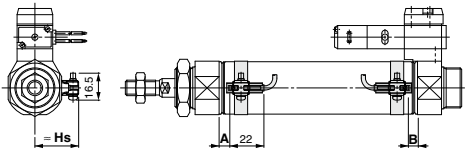

D-H7□/H7□W/H7NF

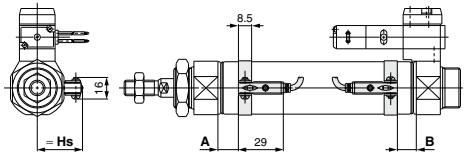

D-G5NT

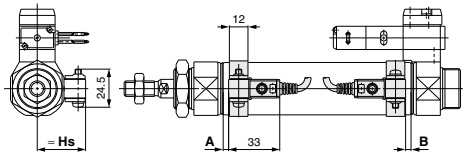

D-H7C

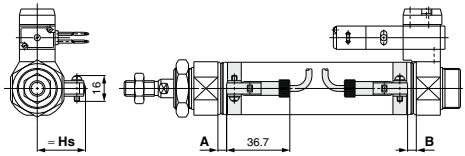

Auto Switch Proper Mounting Position (Detection at Stroke End) and Its Mounting Height: Single Acting, Spring Return (S)/Spring Extend (T)

Auto Switch Proper Mounting Position: Standard, Spring Return (S) Non-Rotating, Spring Return (S)

(mm)

Auto switch model	Bore size	A dimension					B
		to 15st	51 to 100st	101 to 150st	151 to 200st	201 to 250st	
D-A9□(V)	20	31.5	56.5	81.5	—	—	5.5
	25	31.5	56.5	81.5	—	—	5.5
	32	32.5	57.5	82.5	107.5	—	6.5
	40	38.5	63.5	88.5	113.5	138.5	11.5
D-M9□(V) D-M9□W(V) D-M9□A(V)	20	35.5	60.5	85.5	—	—	9.5
	25	35.5	60.5	85.5	—	—	9.5
	32	36.5	61.5	86.5	111.5	—	10.5
	40	42.5	67.5	92.5	117.5	142.5	15.5
D-B5□ D-B64	20	26	51	76	—	—	0
	25	26	51	76	—	—	0
	32	27	52	77	102	—	1
	40	32	57	82	107	132	6
D-C7□ D-C80 D-C73C D-C80C	20	32	57	82	—	—	6
	25	32	57	82	—	—	6
	32	33	58	83	108	—	7
	40	38	63	88	113	138	12
D-B59W	20	29	54	79	—	—	3
	25	29	54	79	—	—	3
	32	30	55	80	105	—	4
	40	35	60	85	110	135	9
D-H7□ D-H7C D-H7□W D-H7NF	20	31	56	81	—	—	5
	25	31	56	81	—	—	5
	32	32	57	82	107	—	6
	40	37	62	87	112	137	11
D-G5NT	20	27.5	52.5	77.5	—	—	1.5
	25	27.5	52.5	77.5	—	—	1.5
	32	28.5	53.5	78.5	103.5	—	2.5
	40	33.5	58.5	83.5	108.5	133.5	7.5

Auto Switch Proper Mounting Position: Standard, Spring Extend (T) Non-Rotating, Spring Extend (T)

(mm)

Auto switch model	Bore size	A	B dimension				
			to 15st	51 to 100st	101 to 150st	151 to 200st	201 to 250st
D-A9□(V)	20	6.5	30.5	55.5	80.5	—	—
	25	6.5	30.5	55.5	80.5	—	—
	32	7.5	31.5	56.5	81.5	106.5	—
	40	13.5	36.5	61.5	86.5	111.5	136.5
D-M9□(V) D-M9□W(V) D-M9□A(V)	20	10.5	34.5	59.5	84.5	—	—
	25	10.5	34.5	59.5	84.5	—	—
	32	11.5	35.5	60.5	85.5	110.5	—
	40	17.5	40.5	65.5	90.5	115.5	140.5
D-B5□ D-B64	20	1	25	50	75	—	—
	25	1	25	50	75	—	—
	32	2	26	51	76	101	—
	40	7	31	56	81	106	131
D-C7□ D-C80 D-C73C D-C80C	20	7	31	56	81	—	—
	25	7	31	56	81	—	—
	32	8	32	57	82	107	—
	40	13	37	62	87	112	137
D-B59W	20	4	28	53	78	—	—
	25	4	28	53	78	—	—
	32	5	29	54	79	104	—
	40	10	34	59	84	109	134
D-H7□ D-H7C D-H7□W D-H7NF	20	6	30	55	80	—	—
	25	6	30	55	80	—	—
	32	7	31	56	81	106	—
	40	12	36	61	86	111	136
D-G5NT	20	2.5	26.5	51.5	76.5	—	—
	25	2.5	26.5	51.5	76.5	—	—
	32	3.5	27.5	52.5	77.5	102.5	—
	40	8.5	32.5	57.5	81.5	107.5	132.5

Note) Adjust the auto switch after confirming the operating conditions in the actual setting.

Auto Switch Mounting 2

Auto Switch Proper Mounting Position (Detection at Stroke End) and Its Mounting Height

Auto Switch Mounting Height

(mm)

Bore size (mm) \ Auto switch model	D-A9□(V) D-M9□(V) D-M9□W(V) D-M9□A(V)	D-B5□ D-B64 D-B59W D-G5NT D-H7C	D-C7□ D-C80 D-H7□ D-H7□W D-H7NF	D-C73C D-C80C
	Hs	Hs	Hs	Hs
20	23	25.5	22.5	25
25	25.5	28	25	27.5
32	29	31.5	28.5	31
40	33	35.5	32.5	35

Minimum Auto Switch Mounting Stroke

n: No. of auto switches (mm)

Auto switch model	No. of auto switch mounted				
	1	2		n	
		Different surfaces	Same surface	Different surfaces	Same surface
D-A9□ D-M9□ D-M9□W	10	15 Note 1)	45 Note 1)	$15 + 45\frac{(n-2)}{2}$ (n = 2, 4, 6···) Note2)	45 + 45 (n - 2) (n = 2, 3, 4, 5···)
D-M9□V	5	20	35	$20 + 35\frac{(n-2)}{2}$ (n = 2, 4, 6···) Note2)	35 + 35 (n - 2) (n = 2, 3, 4, 5···)
D-A9□V	5	15	25	$15 + 35\frac{(n-2)}{2}$ (n = 2, 4, 6···) Note2)	25 + 35 (n - 2) (n = 2, 3, 4, 5···)
D-M9□WV D-M9□AV	10	20	35	$20 + 35\frac{(n-2)}{2}$ (n = 2, 4, 6···) Note2)	35 + 35 (n - 2) (n = 2, 3, 4, 5···)
D-C7□ D-C80	10	15	50	$15 + 45\frac{(n-2)}{2}$ (n = 2, 4, 6···) Note2)	50 + 45 (n - 2) (n = 2, 3, 4, 5···)
D-H7□ D-H7□W D-H7NF	10	15	60	$15 + 45\frac{(n-2)}{2}$ (n = 2, 4, 6···) Note2)	60 + 45 (n - 2) (n = 2, 3, 4, 5···)
D-C73C D-C80C D-H7C	10	15	65	$15 + 50\frac{(n-2)}{2}$ (n = 2, 4, 6···) Note2)	65 + 50 (n - 2) (n = 2, 3, 4, 5···)
D-B5□/B64 D-G5NT	10	15	75	$15 + 50\frac{(n-2)}{2}$ (n = 2, 4, 6···) Note2)	75 + 55 (n - 2) (n = 2, 3, 4, 5···)
D-B59W	15	20	75	$20 + 50\frac{(n-2)}{2}$ (n = 2, 4, 6···) Note2)	75 + 55 (n - 2) (n = 2, 3, 4, 5···)

Note 2) When "n" is an odd number, an even number that is one larger than this odd number is used for the calculation.

Note 1) Auto switch mounting (The adjustment as shown in the figures below is required with the following stroke ranges.)

Auto switch model	With 2 auto switches	
	Different surfaces Note 1)	Same surface Note 1)
	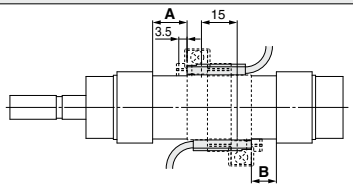 The proper auto switch mounting position is 6 mm inward from the switch holder edge.	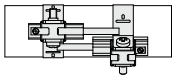 The auto switch is mounted by slightly displacing it in a direction (cylinder tube circumferential exterior) so that the auto switch and lead wire do not interfere with each other.
D-A93	—	45 to less than 50 stroke
D-M9□ D-M9□W	15 to less than 20 stroke	45 to less than 55 stroke

Operating Range

(mm)

Auto switch model	Bore size			
	20	25	32	40
D-A9□(V)	6	6	6	6
D-M9□(V)/M9□W(V) **D-M9□A(V)**	3.5	3	3.5	3
D-C7□/C80 **D-C73C/C80C**	7	8	8	8
D-B5□/B64	8	8	9	9
D-B59W	12	12	13	13
D-H7□/H7□W **D-G5NT/H7NF**	4	4	4.5	5
D-H7C	7	8.5	9	10

∗ Since the operating range is provided as a guideline including hysteresis, it cannot be guaranteed (assuming approximately ±30% dispersion).
It may vary substantially depending on an ambient environment.

Auto Switch Mounting Bracket: Part No.

Auto switch mounting	Bore size (mm)			
	ø20	ø25	ø32	ø40
D-M9□(V) **D-M9□W(V)** **D-A9□(V)**	Note 1) BM5-020 (A set of a, b, c, d)	Note 1) BM5-025 (A set of a, b, c, d)	Note 1) BM5-032 (A set of a, b, c, d)	Note 1) BM5-040 (A set of a, b, c, d)
D-M9□A(V) Note 2)	BM5-020S (A set of b, c, e, f)	BM5-025S (A set of b, c, e, f)	BM5-032S (A set of b, c, e, f)	BM5-040S (A set of b, c, e, f)
D-H7□ **D-H7□W** **D-H7NF** **D-C7□/C80** **D-C73C/C80C**	BM2-020A (A set of c and d)	BM2-025A (A set of c and d)	BM2-032A (A set of c and d)	BM2-040A (A set of c and d)
D-B5□/B64 **D-B59W** **D-G5NT**	BA2-020 (A set of c and d)	BA2-025 (A set of c and d)	BA2-032 (A set of c and d)	BA2-040 (A set of c and d)

Note 1) Since the switch bracket (made from nylon) are affected in an environment where alcohol, chloroform, methylamines, hydrochloric acid or sulfuric acid is splashed over, so it cannot be used. Please consult SMC regarding other chemicals.
Note 2) When mounting a D-M9□A(V) type auto switch, if the switch bracket is mounted on the indicator light, it may damage the auto switch. Therefore, be sure to avoid mounting the switch bracket on the indicator light.

[Mounting screw set made of stainless steel]

The following set of mounting screws made of stainless steel is available. Use it in accordance with the operating environment. (Please order the auto switch mounting bracket separately, since it is not included.)
BBA4: For D-C7/C8/H7 types
Note) Refer to page 1440 for the details of BBA4.

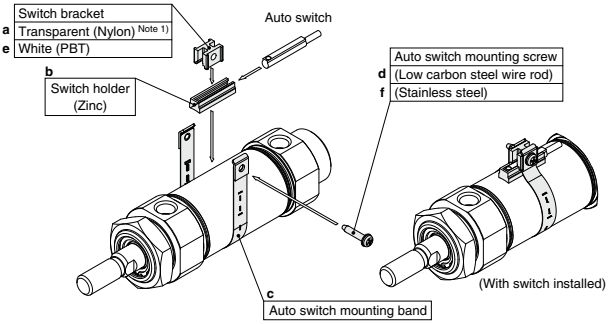

∗ Band (c) is mounted so that the projected part is on the internal side (contact side with the tube).

Besides the models listed in How to Order, the following auto switches are applicable.
Refer to pages 1341 to 1435 for detailed specifications.

Auto switch type	Part no.	Electrical entry (Fetching direction)	Features
Reed	D-B53, C73, C76	Grommet (In-let)	—
	D-C80		Without indicator light
Solid state	D-H7A1, H7A2, H7B		—
	D-H7NW, H7PW, H7BW		Diagnostic indication (2-color)
	D-G5NT		With timer

∗ For solid state auto switches, auto switches with a pre-wired connector are also available. Refer to pages 1410 and 1411 for details.
∗ Normally closed (NC = b contact) solid state auto switches (D-M9□E(V)) are also available. Refer to page 1360 for details.

Valve Mounted Cylinder
Double Acting
CV3 Series
ø40, ø50, ø63, ø80, ø100

How to Order

Built-in Magnet Cylinder Model

If a built-in magnet cylinder without an auto switch is required, there is no need to enter the symbol for the auto switch.
(Example) CDV3LN50-100-1

Suffix for cylinder

Nil	Rod extended when energized
B	Rod retracted when energized

∗ Symbol "B" is not required for double solenoid.

Electrical entry

Nil	Grommet
D	DIN terminal

Solenoid valve

Nil	2 position single
W	2 position double

Solenoid valve voltage
Refer to page 1217 for solenoid valve voltage.

Cylinder stroke (mm)
Refer to page 1217 for standard strokes.

CV3 L □ N 50 – 100 □ 1 □ □ – □ – □

With auto switch: CDV3 L □ N 50 – 100 □ – M9BW □ – 1 □ □ – □ – □

With Auto Switch
(Built-in magnet)

Mounting type

B	Basic type
L	Axial foot type
F	Rod side flange type
C ∗	Single clevis type
D ∗	Double clevis type
T	Center trunnion type

∗ Except tubing I.D. ø40

Type

Nil	Aluminum tube
F ∗	Steel tube

∗ Not available with auto switch.

Bore size

40	40 mm
50	50 mm
63	63 mm
80	80 mm
100	100 mm

Auto switch

Nil	Without auto switch

∗ For the applicable auto switch model, refer to the table below.

Suffix for cylinder

Rod boot	J	Nylon tarpaulin
	K	Heat resistant tarpaulin
Cushion	N	Without cushion
	R	With cushion on rod end
	H	With cushion on head end
	Nil	With cushion on both ends

∗ When specifying symbol more than one, combine symbols alphabetically.

Number of auto switches

Nil	2 pcs.
S	1 pc.
n	"n" pcs.

Made to Order
Refer to page 1217 for details.

Applicable Auto Switches/Refer to pages 1341 to 1435 for further information on auto switches.

Type	Special function	Electrical entry	Indicator light	Wiring (Output)	Load voltage DC		Load voltage AC	Auto switch model: Tie-rod mounting	Auto switch model: Band mounting	Lead wire length (m) 0.5 (Nil)	1 (M)	3 (L)	5 (Z)	Pre-wired connector	Applicable load	
Solid state auto switch	——	Grommet	Yes	3-wire (NPN)	24 V	5 V, 12 V	—	M9N	—	●	●	●	○	○	IC circuit	Relay, PLC
								—	G59**	●	–	●	○	○		
				3-wire (PNP)				M9P	—	●	●	●	○	○		
								—	G5P**	●	–	●	○	○		
				2-wire		12 V		M9B	—	●	●	●	○	○	—	
								—	K59**	●	–	●	○	○		
		Terminal conduit		3-wire (NPN)	24 V	12 V	—	G39C	G39	–	–	–	–	–	IC circuit	
				2-wire				K39C	K39	–	–	–	–	–		
	Diagnostic indication (2-color indicator)	Grommet		3-wire (NPN)		5 V, 12 V		M9NW	—	●	●	●	○	○		
								—	G59W**	●	–	●	○	○		
				3-wire (PNP)				M9PW	—	●	●	●	○	○		
								—	G5PW**	●	–	●	○	○		
				2-wire		12 V		M9BW	—	●	●	●	○	○	—	
								—	K59W**	●	–	●	○	○		
	Water resistant (2-color indicator)			3-wire (NPN)		5 V, 12 V		M9NA∗1	—	○	○	●	○	○	IC circuit	
				3-wire (PNP)				M9PA∗1	—	○	○	●	○	○		
				2-wire		12 V		M9BA∗1	—	○	○	●	○	○	—	
	With diagnostic output (2-color indicator)			4-wire (NPN)		5 V, 12 V		F59F	G59F**	●	–	●	○	○	IC circuit	
Reed auto switch	——	Grommet	Yes	3-wire (NPN equivalent)	—	5 V	—	A96 [Z76] ***	—	●	–	●	–	–	IC circuit	—
			No	2-wire	24 V	12 V	100 V	A93 [Z73] *** ∗2	—	●	●	●	●	–	—	Relay, PLC
			Yes				100 V or less	A90 [Z80] ***	—	●	–	●	–	–	IC circuit	
			No				100 V, 200 V	A54	B54**	●	–	●	●	–	—	
							200 V or less	A64	B64**	●	–	●	–	–		
		Terminal conduit	Yes				—	A33C	A33	–	–	–	–	–		PLC
							100 V, 200 V	A34C	A34	–	–	–	–	–		Relay, PLC
		DIN terminal						A44C	A44	–	–	–	–	–		
	Diagnostic indication (2-color indicator)	Grommet				—	–	A59W	B59W**	●	–	●	–	–		

∗1 Water resistant type auto switches can be mounted on the above models, but in such case SMC cannot guarantee water resistance.
Consult with SMC regarding water resistant types with the above model numbers.
∗2 1 m type lead wire is only applicable to D-A93.
∗ Lead wire length symbols: 0.5 m ····· Nil (Example) M9NW
1 m ····· M (Example) M9NWM
3 m ····· L (Example) M9NWL
5 m ····· Z (Example) M9NWZ

∗ Solid state auto switches marked with "○" are produced upon receipt of order.
∗∗ D-B5□/B64/G5/K5□ types are mountable only upon a receipt of order. (Not mountable after the time of shipment)
∗∗∗ D-A9□ cannot be mounted on ø50. Select auto switches in brackets.

∗ Since there are other applicable auto switches than listed, refer to page 1236 for details.
∗ For details about auto switches with pre-wired connector, refer to pages 1410 and 1411.
∗ D-A9□/M9□/M9□W/M9□A auto switches are shipped together (not assembled). (Only auto switch mounting brackets are assembled before shipped.)

- **Operation type can be changed to rod extended when energized or rod retracted when energized.**
- **Ease of maintenance and inspection.**
  The solenoid valve can be separated easily and the cylinder can also be disassembled.
- **A manual operation mechanism is provided as standard equipment (non-locking).**

Specifications

Bore size (mm)			40	50	63	80	100
Fluid			Air				
Action			Double acting				
Proof pressure			1.35 MPa				
Maximum operating pressure			0.9 MPa				
Ambient and fluid temperature			–10 to 50°C*1				
Minimum operating pressure			0.15 MPa				
Piston speed			50 to 500 mm/s				50 to 350 mm/s
Cushion			Air cushion				
Stroke length tolerance			Up to 250 st: $^{+1.0}_{0}$ 251 to 1000 st: $^{+1.4}_{0}$				
Lubrication			Not required (Non-lube)				
Mounting			Basic, Foot, Rod flange, Single clevis Double clevis, Center trunnion				
Port size			Rc1/4				
Allowable kinetic energy (J)*2	**Air cushion**	**When activated**	2.8	4.6	7.8	16	29
		When not activated	0.33	0.56	0.91	1.5	2.68

*1 No freezing
*2 Activate the air cushion when operating the cylinder. If this is not done, the piston rod assembly or the tie-rods will be damaged when the allowable kinetic energy exceeds the values shown in the above table.

Symbol
Air cushion

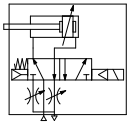

Solenoid Valve Specifications

Applicable solenoid valve model	V3□08			
Coil rated voltage	Refer to the solenoid valve voltage shown below.			
Electrical entry	Grommet, DIN terminal			
Allowable voltage	–15 to 10% of the rated voltage			
Coil insulation	Class B or equivalent (130°C)			
Apparent power Note)	**AC**	Inrush	50 Hz	8.5 VA
			60 Hz	7.5 VA
		Holding	50 Hz	7.0 VA
			60 Hz	5.5 VA
Power consumption Note)	**DC**	6 W		

Note) At the rated voltage.
* Refer to page 1226 for solenoid valve replacement methods and part numbers.

Made to Order

Made to Order Specifications
Click here for details

Symbol	Specifications
-XA□	Change of rod end shape
-XC4	With heavy duty scraper
-XC15	Change of tie-rod length
-XC29	Double knuckle joint with spring pin
-XC65	Made of stainless steel (Combination of XC7 and XC68)

Solenoid valve voltage

1	100 VAC (50/60 Hz)
2	200 VAC (50/60 Hz)
3	110 VAC (50/60 Hz)
4	220 VAC (50/60 Hz)
5	24 VDC
6	12 VDC
7	240 VAC (50/60 Hz)
8	48 VAC (50/60 Hz)
B	24 VAC (50/60 Hz)
P	100 VDC
V	6 VDC
Y	48 VDC
Z	110 VDC

* For other rated voltages, please contact SMC.

Rod Boot Material

Symbol	Rod boot material	Maximum ambient temperature
J	Nylon tarpaulin	70°C
K	Heat resistant tarpaulin	110°C*

* Maximum ambient temperature for the rod boot itself.

⚠ Precautions

Minimum stroke for auto switch mounting

⚠ Caution

1. Each switch and mounting type of cylinder has different minimum mountable stroke. Be careful especially of the center trunnion type. (For details, refer to pages 1234 and 1235.)

Refer to pages 1232 to 1236 for cylinders with auto switches.

- Proper auto switch mounting position (detection at stroke end) and mounting height
- Minimum auto switch mounting stroke
- Operating range
- Auto switch mounting bracket: Part no.

Standard Strokes

(mm)

Bore size	Standard stroke	
	Stroke range ①	Stroke range ②
40	25, 50, 75, 100, 125, 150, 200, 250, 300, 350, 400, 450, 500	Up to 1000
50, 63	25, 50, 75, 100, 125, 150, 200, 250, 300, 350, 400, 450, 500, 600	
80, 100	25, 50, 75, 100, 125, 150, 200, 250, 300, 350, 400, 450, 500, 600, 700	

Note 1) Intermediate strokes not listed above are produced upon receipt of order.
Note 2) Applicable strokes should be confirmed according to the usage. For details, refer to "Air Cylinders Model Selection" in the **Web Catalog**. In addition, the products that exceed the stroke range ① might not be able to fulfill the specifications due to the deflection etc.
Note 3) Please consult with SMC for manufacturability and the part numbers when exceeding the stroke range ②.
Note 4) The minimum stroke length is different in the trunnion type and types with auto switch. Refer to pages 1234 and 1235.

Opening Range of Throttle Valve and Driving Speed

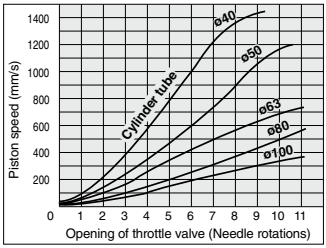

Conditions: Operating pressure 0.5 MPa, Horizontal mounting, No load, Spring return side
• Driving speeds indicated above are for reference.

Piston Speed Adjustment

1. To slow down the piston speed, screw in the needle of the silencer exhaust throttle valve clockwise, to reduce the amount of air that is discharged.
2. The throttle valve needle opens fully when it is loosened 11 turns from its fully closed position.

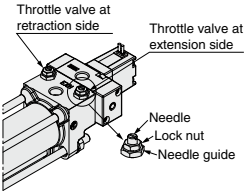

3. After the specified speed has been set, secure the needle with the lock nut.

Weight

(kg)

Bore size (mm)		40	50	63	80	100
Basic weight	Basic type	1.17 (1.27)	1.47 (1.60)	2.25 (2.45)	3.96 (4.27)	5.55 (5.95)
	Axial foot type	1.34 (1.44)	1.67 (1.80)	2.54 (2.74)	4.75 (5.06)	6.48 (6.88)
	Rod side flange type	1.43 (1.53)	1.88 (2.01)	2.87 (3.07)	5.06 (5.37)	6.94 (7.34)
	Single clevis type	—	2.20 (2.33)	3.36 (3.56)	5.90 (6.21)	8.20 (8.60)
	Double clevis type	—	2.25 (2.38)	3.41 (3.61)	5.96 (6.27)	8.27 (8.67)
	Trunnion type	1.82 (1.97)	2.26 (3.35)	3.64 (4.00)	6.34 (6.79)	9.12 (9.71)
Additional weight per each 50 mm of stroke		0.20 (0.28)	0.25 (0.35)	0.31 (0.43)	0.46 (0.70)	0.58 (0.87)
Accessory bracket	Single knuckle	0.23	0.26	0.26	0.60	0.83
	Double knuckle (with pin)	0.37	0.43	0.43	0.87	1.27

∗( ): Steel tube type.

Calculation: (Example) **CV3L40-100-1**
• Basic weight·····1.33 (kg)
• Additional weight·····0.20 (kg/50 st)
• Cylinder stroke·····100 (st) 1.33 + 0.20 x 100 ÷ 50 = 1.73 kg

Accessory

Mounting		Basic type	Foot type	Rod side flange type	Single clevis type	Double clevis type ∗	Center trunnion type
Standard equipment	Rod end nut	●	●	●	●	●	●
	Clevis pin	—	—	—	—	●	—
Option	Single knuckle joint	●	●	●	●	●	●
	Double knuckle joint ∗ (with pin)	●	●	●	●	●	●
	With rod boot	●	●	●	●	●	●

∗ Pin, plain washer and cotter pin are packaged together with double clevis and double knuckle joint.
∗ Refer to page 1225 for dimensions and part numbers of the option.
Refer to page 1220 for dimensions of the rod boot.

Mounting Bracket Part No.

Mounting Bracket Part No.

Bore size (mm)	40	50	63	80	100
Axial foot ∗	CA1-L04	CA1-L05	CA1-L06	CA1-L08	CA1-L10
Flange	CA1-F04	CA1-F05	CA1-F06	CA1-F08	CA1-F10
Single clevis	–	CV3-C05	CV3-C06	CV3-C08	CV3-C10
Double clevis ∗∗	–	CV3-D05	CV3-D06	CV3-D08	CV3-D10

∗ Order two foot brackets per cylinder.
∗∗ Accessories for each mounting bracket are as follows.
Foot, Flange: Body mounting bolts, Spring washer
Single clevis: Body mounting bolts, Nut, Spring washer
Double clevis: Body mounting bolts, Nut, Spring washer, Clevis pin, Flat washer, Cotter pin

Construction

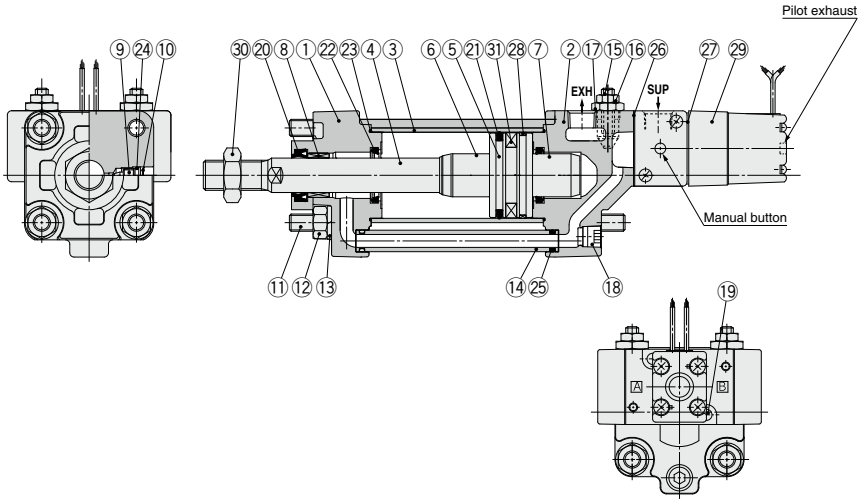

Component Parts

No.	Description	Material	Q'ty	Note
1	**Rod cover**	Aluminum die-casted	1	Black painted
2	**Head cover**	Aluminum die-casted	1	Black painted
3	**Cylinder tube**	Aluminum alloy	1	Hard anodized
4	**Piston rod**	Carbon steel	1	Hard chrome plating
5	**Piston**	Aluminum alloy	1	
6	**Cushion ring**	Aluminum alloy	1	Anodized
7	**Cushion ring B**	Aluminum alloy	1	Anodized
8	**Bushing**	Special friction material	1	
9	**Cushion valve**	Steel wire	2	Trivalent zinc chromated
10	**Retaining ring**	Spring steel	2	Phosphate coating
11	**Tie-rod**	Carbon steel	4	Trivalent zinc chromated
12	**Tie-rod nut**	Rolled steel	6	Trivalent black zinc chromated
13	**Spring washer**	Steel wire	6	Trivalent black zinc chromated
14	**Pipe**	Carbon steel tube	1	Trivalent zinc chromated
15	**Needle**	Free-cutting steel	2	Electroless nickel plating
16	**Lock nut**	Carbon steel	2	Trivalent zinc chromated
17	**Needle guide**	Free-cutting steel	2	Electroless nickel plating
18	**Plug**	Chromium molybdenum steel	1	Trivalent black zinc chromated
19	**Hex. socket head cap screw with SW**	Carbon steel	2	Trivalent black zinc chromated
20	**Rod seal**	NBR	1	
21	**Piston seal**	NBR	1	

No.	Description	No. of solenoids	Rod extended when energized	Rod retracted when energized
29	**Solenoid valve**	Single	(1)	(2)
		Double	(3)	

∗ How to order solenoid valves
Note 1) V3108-00 Voltage Electrical entry
Note 2) V3108-00 Voltage Electrical entry -X23
Note 3) V3208-00 Voltage Electrical entry

Component Parts

No.	Description	Material	Q'ty	Note
22	**Cushion seal**	Urethane	2	
23	**Cylinder tube gasket**	NBR	2	
24∗	**Cushion valve seal**	NBR	2	
25	**Pipe gasket**	NBR	2	
26	**Head cover gasket**	NBR	1	
27	**Solenoid gasket**	NBR	1	For single solenoid
			2	For double solenoid
28	**Wear ring**	Resin	1	
30	**Rod end nut**	Rolled steel	1	Zinc chromated
31	**Magnet**	—	(1)	

∗ Not replaceable.

Replacement Parts: Seal Kit

Bore size (mm)	Kit no.	Contents
40	CV3N40-PS	Set of nos. above ⑳, ㉑, ㉒, ㉓, ㉕, ㉖
50	CV3N50-PS	
63	CV3N63-PS	
80	CV3N80-PS	
100	CV3N100-PS	

∗ Seal kit includes ⑳, ㉑, ㉒, ㉓, ㉕, ㉖. Order the seal kit, based on each bore size.
(The parts indicated with number ㉔ is not replaceable.)
∗ Seal kit includes a grease pack (ø40, ø50: 10 g, ø63, ø80: 20 g, ø100: 30 g). Order with the following part number when only the grease pack is needed.
Grease pack part no.: GR-S-010 (10 g)**, GR-S-020** (20 g)

For the dimensions of DIN terminal, refer to page 1225.

Basic Type: CV3B

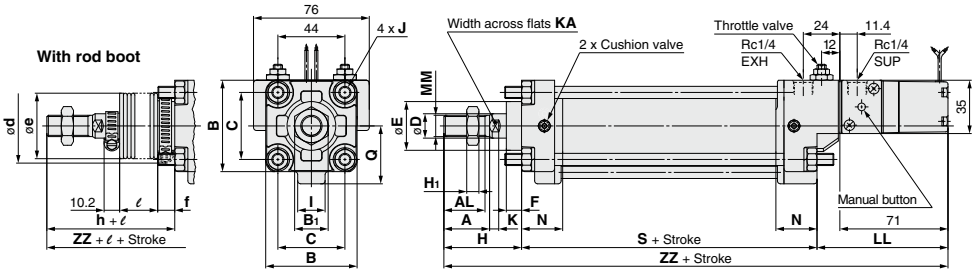

(mm)

Bore size (mm)	Stroke range* (mm)	A	AL	B	B_1	C	D	E	F	H_1	I	J	K	KA	LL	MM	N	Q	S
40	Up to 1000	30	27	60	22	44	16	32	10	8	18	M8 x 1.25	6	14	86	M14 x 1.5	27	38	84
50	Up to 1000	35	32	70	27	52	20	40	10	11	18	M8 x 1.25	7	18	83	M18 x 1.5	30	43.5	90
63	Up to 1000	35	32	85	27	64	20	40	10	11	18	M10 x 1.25	7	18	83	M18 x 1.5	31	49	98
80	Up to 1000	40	37	102	32	78	25	52	14	13	20	M12 x 1.75	10	22	84	M22 x 1.5	37	63	116
100	Up to 1000	40	37	116	41	92	30	52	14	16	20	M12 x 1.75	10	26	85	M26 x 1.5	40	73	126

Bore size (mm)	Without rod boot		With rod boot					
	H	ZZ	d	e	f	h	ℓ	ZZ
40	51	221	56	43	11.2	59	1/4 stroke	229
50	58	231	64	52	11.2	66	1/4 stroke	239
63	58	239	64	52	11.2	66	1/4 stroke	247
80	71	271	76	65	12.5	80	1/4 stroke	280
100	72	283	76	65	14	81	1/4 stroke	292

∗ The minimum stroke of the one with rod boot is 20 mm or more.

Axial Foot Type: CV3L

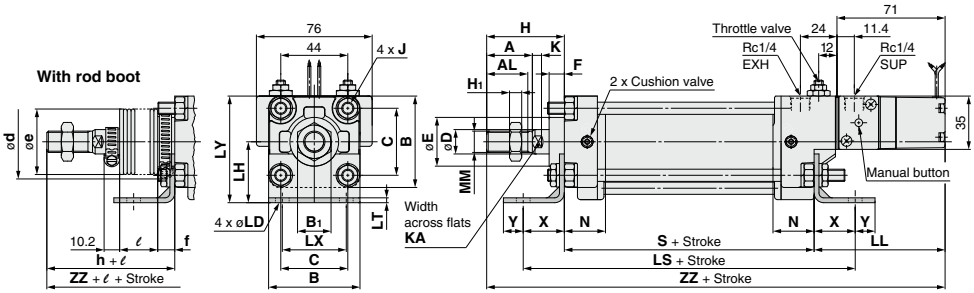

(mm)

Bore size (mm)	Stroke range* (mm)	A	AL	B	B_1	C	D	E	F	H_1	J	K	KA	LD	LH	LL	LS	LT	LX	LY
40	Up to 1000	30	27	60	22	44	16	32	10	8	M8 x 1.25	6	14	9	40	86	138	3.2	42	70
50	Up to 1000	35	32	70	27	52	20	40	10	11	M8 x 1.25	7	18	9	45	83	144	3.2	50	80
63	Up to 1000	35	32	85	27	64	20	40	10	11	M10 x 1.25	7	18	11.5	50	83	166	3.2	59	93
80	Up to 1000	40	37	102	32	78	25	52	14	13	M12 x 1.75	10	22	13.5	65	84	204	4.5	76	116
100	Up to 1000	40	37	116	41	92	30	52	14	16	M12 x 1.75	10	26	13.5	75	85	212	6	92	133

Bore size (mm)	MM	N	S	X	Y	Without rod boot		With rod boot					
						H	ZZ	d	e	f	h	ℓ	ZZ
40	M14 x 1.5	27	84	27	13	51	221	56	43	11.2	59	1/4 stroke	229
50	M18 x 1.5	30	90	27	13	58	231	64	52	11.2	66	1/4 stroke	239
63	M18 x 1.5	31	98	34	16	58	239	64	52	11.2	66	1/4 stroke	247
80	M22 x 1.5	37	116	44	16	71	271	76	65	12.5	80	1/4 stroke	280
100	M26 x 1.5	40	126	43	17	72	283	76	65	14	81	1/4 stroke	292

The minimum stroke of the one with rod boot is 20 mm or more. ∗ Long stroke

Rod Side Flange Type: CV3F

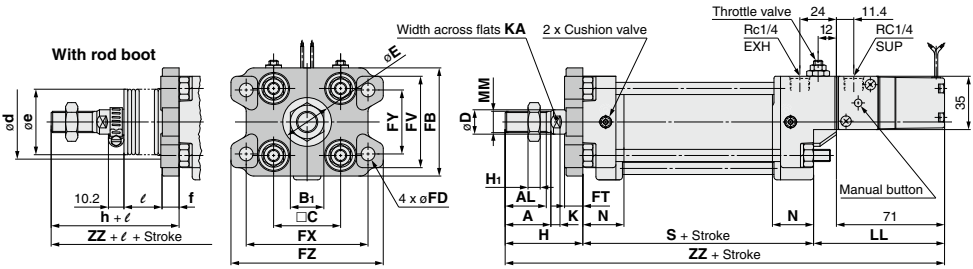

(mm)

Bore size (mm)	Stroke range* (mm)	A	AL	B	B1	C	D	E	FB	FD	FT	FV	FX	FY	FZ	H1	I	J	K	KA
40	Up to 1000	30	27	60	22	44	16	32	71	9	12	60	80	42	100	8	18	M8 x 1.25	6	14
50	Up to 1000	35	32	70	27	52	20	40	81	9	12	70	90	50	110	11	18	M8 x 1.25	7	18
63	Up to 1000	35	32	85	27	64	20	40	101	11.5	15	86	105	59	130	11	18	M10 x 1.25	7	18
80	Up to 1000	40	37	102	32	78	25	52	119	13.5	18	102	130	76	160	13	20	M12 x 1.75	10	22
100	Up to 1000	40	37	116	41	92	30	52	133	13.5	18	116	150	92	180	16	20	M12 x 1.75	10	26

Bore size (mm)	LL	MM	N	Q	S	Without rod boot		With rod boot					
						H	ZZ	★d	e	f	h	ℓ	ZZ
40	86	M14 x 1.5	27	38	84	51	221	56	43	11.2	59	1/4 stroke	229
50	83	M18 x 1.5	30	43.5	90	58	231	64	52	11.2	66	1/4 stroke	239
63	83	M18 x 1.5	31	49	98	58	239	64	52	11.2	66	1/4 stroke	247
80	84	M22 x 1.5	37	63	116	71	271	76	65	12.5	80	1/4 stroke	280
100	85	M26 x 1.5	40	73	126	72	283	76	65	14	81	1/4 stroke	292

* The minimum stroke of the one with rod boot is 20 mm or more.
** Long stroke

★ When drilling holes to get through the rod boot for the purpose of mounting, make the holes larger than the outer diameter (ød) of the rod boot mounting bracket.

Single Clevis Type: CV3C

Bore size ø40 is not available.

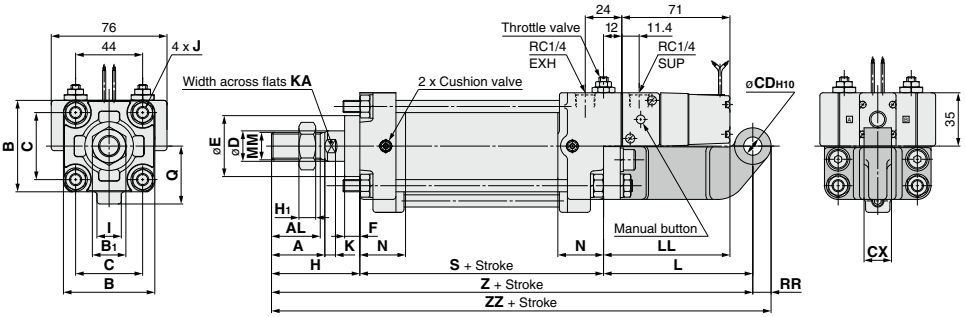

With rod boot

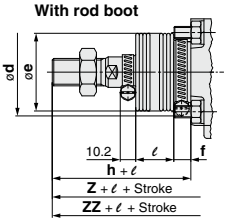

∗∗ Bore size ø40 is not available. (mm)

Bore size∗∗ (mm)	Stroke range∗ (mm)	A	AL	B	B1	C	CDH10	CX	D	E	F	H1	I	J	K	KA	L	LL
50	Up to 1000	35	32	70	27	52	$12^{+0.070}_{0}$	$18^{-0.1}_{-0.3}$	20	40	10	11	18	M8 x 1.25	7	18	98	83
63	Up to 1000	35	32	85	27	64	$16^{+0.070}_{0}$	$25^{-0.1}_{-0.3}$	20	40	10	11	18	M10 x 1.25	7	18	100	83
80	Up to 1000	40	37	102	32	78	$20^{+0.084}_{0}$	$31.5^{-0.1}_{-0.3}$	25	52	14	13	20	M12 x 1.75	10	22	105	84
100	Up to 1000	40	37	116	41	92	$25^{+0.084}_{0}$	$35.5^{-0.1}_{-0.3}$	30	52	14	16	20	M12 x 1.75	10	26	110	85

Bore size (mm)	MM	N	Q	RR	S	Without rod boot			With rod boot					
						H	Z	ZZ	d	e	f	h	ℓ	ZZ
50	M18 x 1.5	30	43.5	12	90	58	246	258	64	52	11.2	66	1/4 stroke	266
63	M18 x 1.5	31	49	16	98	58	256	272	64	52	11.2	66	1/4 stroke	280
80	M22 x 1.5	37	63	20	116	71	292	312	76	65	12.5	80	1/4 stroke	321
100	M26 x 1.5	40	73	25	126	72	308	333	76	65	14	81	1/4 stroke	342

∗ The minimum stroke of the one with rod boot is 20 mm or more.

Double Clevis Type: CV3D

Bore size ø40 is not available.

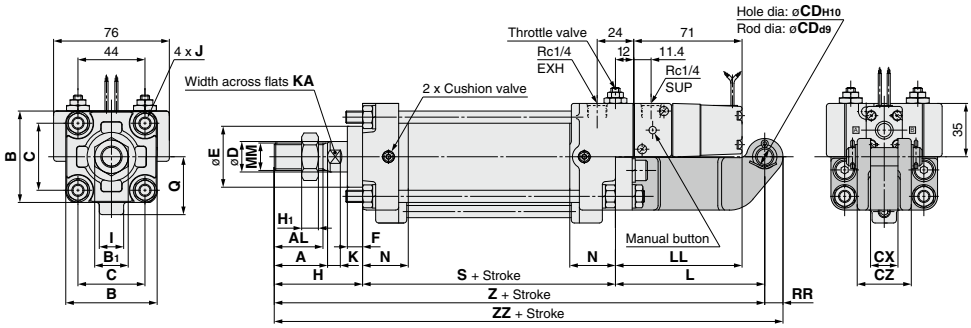

With rod boot

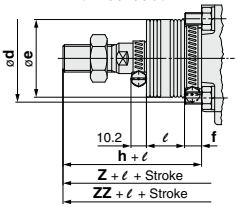

** Bore size ø40 is not available. (mm)

Bore size** (mm)	Stroke range* (mm)	A	AL	B	B_1	C	CD	CX	CZ	D	E	F	H_1	I	J	K	KA	L
50	Up to 1000	35	32	70	27	52	12	$18^{+0.3}_{+0.1}$	35.5	20	40	10	11	18	M8 x 1.25	7	18	98
63	Up to 1000	35	32	85	27	64	16	$25^{+0.3}_{+0.1}$	50	20	40	10	11	18	M10 x 1.25	7	18	100
80	Up to 1000	40	37	102	32	78	20	$31.5^{+0.3}_{+0.1}$	63	25	52	14	13	20	M12 x 1.75	10	22	105
100	Up to 1000	40	37	116	41	92	25	$35.5^{+0.3}_{+0.1}$	71	30	52	14	16	20	M12 x 1.75	10	26	110

Bore size** (mm)	LL	MM	N	Q	RR	S	Without rod boot			With rod boot					
							H	Z	ZZ	d	e	f	h	ℓ	ZZ
50	83	M18 x 1.5	30	43.5	12	90	58	246	258	64	52	11.2	66	1/4 stroke	266
63	83	M18 x 1.5	31	49	16	98	58	256	272	64	52	11.2	66	1/4 stroke	280
80	84	M22 x 1.5	37	63	20	116	71	292	312	76	65	12.5	80	1/4 stroke	321
100	85	M26 x 1.5	40	73	25	126	72	308	333	76	65	14	81	1/4 stroke	342

* Clevis pin, flat washer and cotter pin are shipped together. The minimum stroke with rod boot is 20 mm or more.

Center Trunnion Type: CV3T

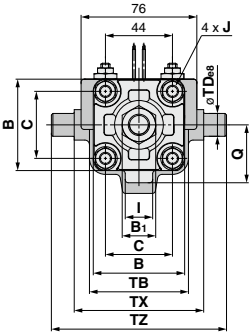

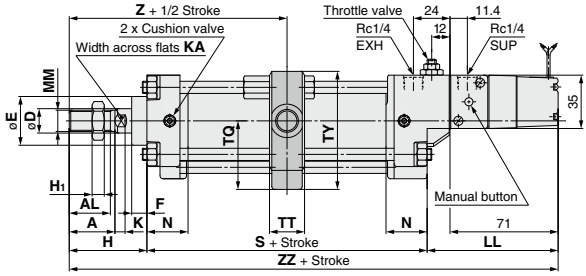

With rod boot

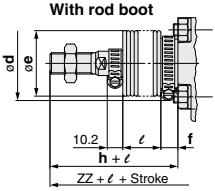

(mm)

Bore size (mm)	Stroke range* (mm)	A	AL	B	B1	C	D	E	F	H1	I	J	K	KA	LL	MM	N	Q
40	25 to 1000	30	27	60	22	44	16	32	10	8	18	M8 x 1.25	6	14	86	M14 x 1.5	27	38
50	25 to 1000	35	32	70	27	52	20	40	10	11	18	M8 x 1.25	7	18	83	M18 x 1.5	30	43.5
63	50 to 1000	35	32	85	27	64	20	40	10	11	18	M10 x 1.25	7	18	83	M18 x 1.5	31	49
80	50 to 1000	40	37	102	32	78	25	52	14	13	20	M12 x 1.75	10	22	84	M22 x 1.5	37	63
100	50 to 1000	40	37	116	41	92	30	52	14	16	20	M12 x 1.75	10	26	85	M26 x 1.5	40	73

Bore size (mm)	S	TB	øTDe8	TI	TQ	TT	TX	TY	TZ	Without rod boot			With rod boot					
										H	Z	ZZ	d	e	f	h	ℓ	ZZ
40	84	65	15 $^{-0.032}_{-0.059}$	20	45	23	85	77.5	115	51	93	221	56	43	11.2	59	1/4 stroke	229
50	90	75	15 $^{-0.032}_{-0.059}$	20	50	23	95	87.5	125	58	103	231	64	52	11.2	66	1/4 stroke	239
63	98	90	18 $^{-0.032}_{-0.059}$	20	57	28	110	102	146	58	107	239	64	52	11.2	66	1/4 stroke	247
80	116	110	25 $^{-0.040}_{-0.073}$	24	69.5	35	140	124.5	190	71	129	271	76	65	12.5	80	1/4 stroke	280
100	126	130	25 $^{-0.040}_{-0.073}$	24	79.5	43	162	144.5	212	72	135	283	76	65	14	81	1/4 stroke	292

* The minimum stroke of the one with rod boot is 20 mm or more.

Electrical Entry: Dimensions for DIN Terminal

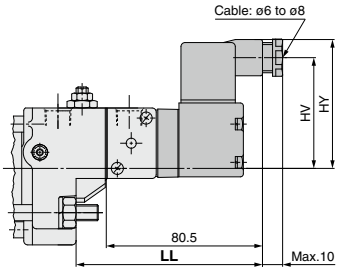

Single

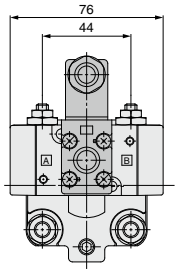

Double

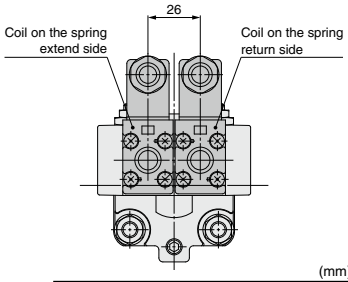

(mm)

Bore size (mm)	LL	HV	HY
40	95.5	55	64
50	92.5	60	69
63	92.5	68	77
80	93.5	76	85
100	94.5	83	92

Accessory Dimensions

I Type Single Knuckle Joint

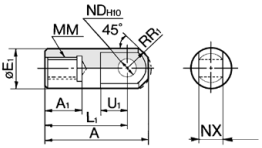

Material: Free cutting sulfur steel (mm)

Part no.	Applicable bore size (mm)	A	A_1	øE_1	L_1	MM	R_1	U_1	øND_{H10}	NX
I-04	**40**	69	22	24	55	M14 x 1.5	15.5	20	$12^{+0.070}_{0}$	$16^{-0.1}_{-0.3}$
I-05	**50, 63**	74	27	28	60	M18 x 1.5	15.5	20	$12^{+0.070}_{0}$	$16^{-0.1}_{-0.3}$
I-08	**80**	91	37	36	71	M22 x 1.5	22.5	26	$18^{+0.070}_{0}$	$28^{-0.1}_{-0.3}$
I-10	**100**	105	37	40	83	M26 x 1.5	24.5	28	$20^{+0.084}_{0}$	$30^{-0.1}_{-0.3}$

Y Type Double Knuckle Joint

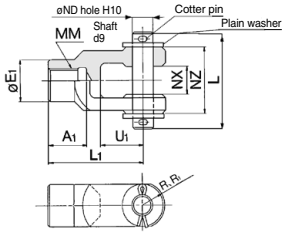

Material: Cast iron (mm)

Part no.	Applicable bore size (mm)	A_1	E_1	L_1	MM	R_1	U_1	ND	NX	NZ	L	Cotter pin size	Plain washer size
Y-04D	**40**	22	24	55	M14 x 1.5	13	25	12	$16^{+0.3}_{+0.1}$	38	55.5	ø3 x 18ℓ	Polished round 12
Y-05D	**50, 63**	27	28	60	M18 x 1.5	15	27	12	$16^{+0.3}_{+0.1}$	38	55.5	ø3 x 18ℓ	Polished round 12
Y-08D	**80**	37	36	71	M22 x 1.5	19	28	18	$28^{+0.3}_{+0.1}$	55	76.5	ø4 x 25ℓ	Polished round 18
Y-10D	**100**	37	40	83	M26 x 1.5	21	38	20	$30^{+0.3}_{+0.1}$	61	83	ø4 x 30ℓ	Polished round 20

∗ Knuckle pin, cotter pin, and plain washer are shipped together.

Clevis Pin

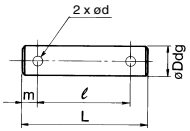

Material: Carbon steel (mm)

Part no.	Applicable bore size (mm)	ø**Dd9**	L	ø**d**	ℓ	m	Applicable plain washer	Applicable cotter pin
CDP-3A	**50**	$12^{-0.050}_{-0.093}$	55.5	3	47.5	4.0	Polished round 12	3 x 18
CVD-06	**63**	$16^{-0.050}_{-0.093}$	75	4	65	5.0	Polished round 16	4 x 22
CVD-08	**80**	$20^{-0.065}_{-0.117}$	94	5	79	7.5	Polished round 20	5 x 30
CVD-10	**100**	$25^{-0.065}_{-0.117}$	105	5	90	7.5	Polished round 24	5 x 35

∗ Cotter pins and flat washers are included.

Knuckle Pin

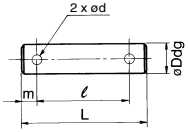

Material: Carbon steel (mm)

Part no.	Applicable bore size (mm)	ø**Dd9**	L	ℓ	m	ø**d** (Drill through)	Applicable cotter pin	Applicable plain washer
CDP-3A	**40, 50, 63**	$12^{-0.050}_{-0.093}$	55.5	47.5	4	3	ø3 x 18 L	Polished round 12
CDP-5A	**80**	$18^{-0.050}_{-0.093}$	76.5	66.5	5	4	ø4 x 25 L	Polished round 18
CDP-6A	**100**	$20^{-0.065}_{-0.117}$	83	73	5	4	ø4 x 30 L	Polished round 20

∗ Cotter pins and flat washers are included.

Rod End Nut

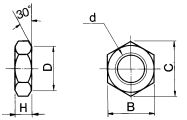

Material: Rolled steel (mm)

Part no.	Applicable bore size (mm)	d	H	B	C	D
NT-04	**40**	M14 x 1.5	8	22	25.4	21
NT-05	**50, 63**	M18 x 1.5	11	27	31.2	26
NT-08	**80**	M22 x 1.5	13	32	37	31
NT-10	**100**	M26 x 1.5	16	41	47.3	39

Manual Operation

Manual operation (non-locking) is possible by pushing the manual button about 3 mm.

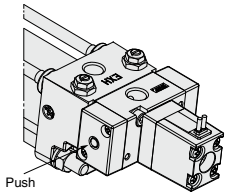

Solenoid Valve Replacement and Order No.

⟨Single solenoid⟩

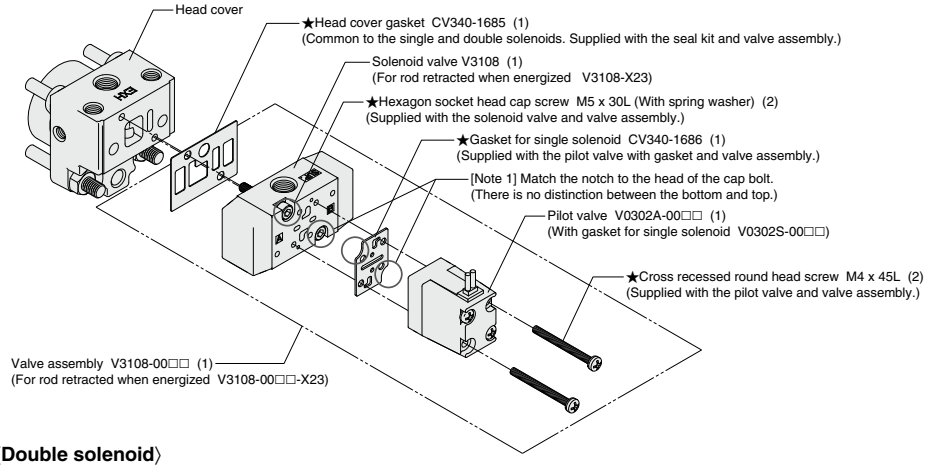

⟨Double solenoid⟩

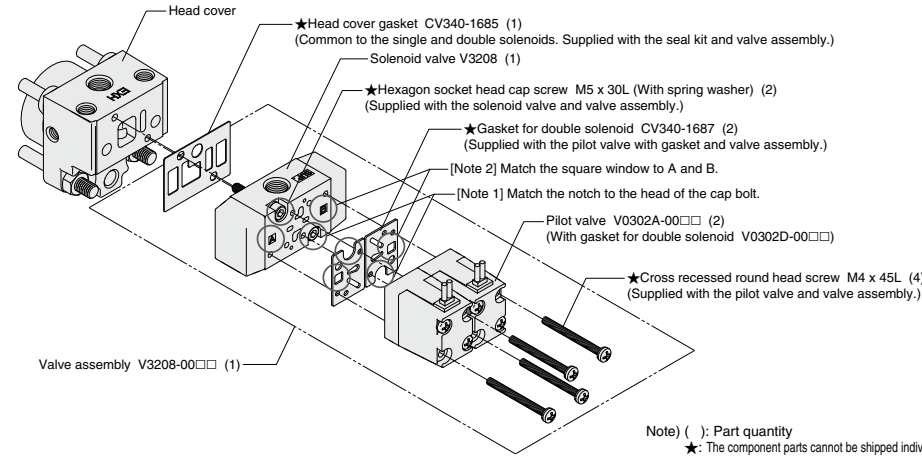

Note) ( ): Part quantity
★: The component parts cannot be shipped individually.

CV3 Series
Specific Product Precautions

Be sure to read this before handling the products. Refer to page 9 for safety instructions, pages 10 to 19 for actuator and auto switch precautions, and 3/4/5-port solenoid valve precautions on the SMC website: https://www.smcworld.com

Handling

⚠Caution

1. Do not open the cushion valve beyond the stopper.
A retaining ring is installed as a cushion valve retention mechanism. Do not open the cushion valve beyond it.
If not operated in accordance with the above precautions, the cushion valve may be ejected from the cover when air pressure is supplied.

Bore size (mm)	Width across flats	Socket wrench
40, 50	2.5	JIS 4648 Hexagonal wrench key 2.5
63, 80, 100	4	JIS 4648 Hexagonal wrench key 4

2. Use the air cushion at the end of cylinder stroke.
Otherwise, the tie-rod or piston rod assembly will be damaged.

⚠Caution

1. Do not use a pneumatic type as an air-hydro cylinder. It can cause oil leak.

2. Do not rotate the piston rod when the rod boot is fixed.
Before rotating the piston rod, loosen the band to avoid twisting the rod boot.

3. Install the rod boot with the breathing hole facing downwards or in a direction suitable to prevent dust, moisture etc. from entering easily into the rod boot.

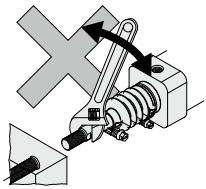

Selection

⚠Warning

1. Confirm the specifications.
Products in this catalog are designed to be used for compressed air systems. If not operated within the designated pressure or temperature, it may damage the products or cause malfunction. (Refer to specifications.)

2. Energizing continuously for a long period of time
When the valve is continuously energized for a long period of time, the performance may deteriorate or effect peripheral equipment adversely since temperature rises when coils generate heat.

Disassembly/Replacement

⚠Caution

1. Use a socket wrench when the bracket is replaced.
If other tools are used, the nut or other parts may be deformed or the work efficiency may decrease.
For applicable sockets, refer to the table below.

Bore size (mm)	Nut	Width across flats	Socket	Tightening torque (N·m)
40, 50	DA00180 (M8 x 1.25, Hexagon nut 3 types)	13	JIS B4636 + Two-angle socket 13	7.4
63	DA00008 (M10 x 1.25, Hexagon nut 3 types)	17	JIS B4636 + Two-angle socket 17	20
80, 100	DA00013 (M12 x 1.75, Hexagon nut 3 types)	19	JIS B4636 + Two-angle socket 19	29

2. Do not replace the bushing.
As the bushing is press-fit, replace the cover assembly when the bushing must be replaced.

3. When a seal is replaced, apply grease to the new seal before it is assembled.
Operation of the cylinder without greasing will result in extreme abrasion of the seal, causing premature air leakage.

4. Do not disassemble the trunnion type cylinder because the mounting precision is required.
It is difficult to align the axial center of the trunnion with the axial center of the cylinder. Thus, if this type of cylinder is disassembled and reassembled, the required dimensional accuracy cannot be attained, which may lead to malfunctions.

Valve Mounted Cylinder: Non-rotating Rod Type Double Acting

CV3K Series

ø40, ø50, ø63

How to Order

Built-in Magnet Cylinder Model

If a built-in magnet cylinder without an auto switch is required, there is no need to enter the symbol for the auto switch.
(Example) CDV3KL40-100-1

Suffix for cylinder

Rod boot	J	Nylon tarpaulin
	K	Heat resistant tarpaulin
Cushion	N	Without cushion
	R	With cushion on rod end
	H	With cushion on head end
	Nil	With cushion on both ends

∗ When specifying symbol more than one, combine symbols alphabetically.

Solenoid valve

Nil	2 position single
W	2 position double

Made to Order
Refer to page 1229 for details.

Solenoid valve voltage
Refer to page 1229 for solenoid valve voltage.

Cylinder stroke (mm)
Refer to page 1229 for standard strokes.

CV3K L 50 – 100 [ ] — 1 [ ] D – [ ] – [ ]

With auto switch

CDV3K L 50 – 100 [ ] – M9BW [ ] – 1 [ ] D – [ ] – [ ]

With Auto Switch
(Built-in magnet)

Non-rotating rod type

Mounting type

B	Basic type
L	Axial foot type
F	Rod side flange type
C∗	Single clevis type
D∗	Double clevis type
T	Center trunnion type

∗ Except tubing I.D. ø40

Bore size

40	40 mm
50	50 mm
63	63 mm

Number of auto switches

Nil	2 pcs.
3	3 pcs.
S	1 pc.
n	"n" pcs.

Auto switch

Nil	Without auto switch

∗ For the applicable auto switch model, refer to the table below.

Electrical entry

Nil	Grommet
D	DIN terminal

Rod extended/ retracted when energized

Nil	Rod extended when energized
B	Rod retracted when energized

∗ Symbol "B" is not required for double solenoid.

Applicable Auto Switches/Refer to pages 1341 to 1435 for further information on auto switches.

Type	Special function	Electrical entry	Indicator light	Wiring (Output)	Load voltage DC	Load voltage AC	Auto switch model Tie-rod mounting	Auto switch model Band mounting	Lead wire length (m) 0.5 (Nil)	1 (M)	3 (L)	5 (Z)	Pre-wired connector	Applicable load	
Solid state auto switch	—	Grommet	Yes	3-wire (NPN)	24 V, 5 V, 12 V	—	M9N	—	●	●	●	○	○	IC circuit	Relay, PLC
							—	G59∗∗	●	—	●	○	○		
				3-wire (PNP)			M9P	—	●	●	●	○	○		
							—	G5P∗∗	●	—	●	○	○		
				2-wire	12 V		M9B	—	●	●	●	○	○	—	
							—	K59∗∗	●	—	●	○	○		
		Terminal conduit		3-wire (NPN)	24 V, 12 V	—	G39C	G39	—	—	—	—	—		
				2-wire			K39C	K39	—	—	—	—	—	IC circuit	
	Diagnostic indication (2-color indicator)	Grommet		3-wire (NPN)	5 V, 12 V		M9NW	—	●	●	●	○	○		
							—	G59W∗∗	●	—	●	○	○		
				3-wire (PNP)			M9PW	—	●	●	●	○	○		
							—	G5PW∗∗	●	—	●	○	○		
				2-wire	12 V		M9BW	—	●	●	●	○	○	—	
							—	K59W∗∗	●	—	●	○	○		
	Water resistant (2-color indicator)			3-wire (NPN)	5 V, 12 V		M9NA∗1	—	○	○	●	○	○	IC circuit	
				3-wire (PNP)			M9PA∗1	—	○	○	●	○	○		
				2-wire	12 V		M9BA∗1	—	○	○	●	○	○	—	
	With diagnostic output (2-color indicator)			4-wire (NPN)	5 V, 12 V		F59F	G59F∗∗	●	—	●	○	○	IC circuit	
Reed auto switch	—	Grommet	Yes	3-wire (NPN equivalent)	—	5 V	A96 Z76 ∗∗∗	—	●	—	●	—	—	IC circuit	—
			No (Yes)	2-wire	24 V, 12 V	100 V	A93 Z73 ∗∗∗ ∗2	—	●	●	●	●	—	—	Relay, PLC
						100 V or less	A90 Z80 ∗∗∗	—	●	—	●	—	—	IC circuit	
						100 V, 200 V	A54	B54∗∗	●	—	●	●	—	—	
						200 V or less	A64	B64∗∗	●	—	●	—	—		
		Terminal conduit	Yes			—	A33C	A33	—	—	—	—	—		PLC
						100 V, 200 V	A34C	A34	—	—	—	—	—		Relay, PLC
		DIN terminal					A44C	A44	—	—	—	—	—		
	Diagnostic indication (2-color indicator)	Grommet			—	—	A59W	B59W∗∗	●	—	●	—	—		

∗1 Water resistant type auto switches can be mounted on the above models, but in such case SMC cannot guarantee water resistance. Consult with SMC regarding water resistant types with the above model numbers.
∗2 1 m type lead wire is only applicable to D-A93.

∗ Lead wire length symbols: 0.5 m ····· Nil (Example) M9NW
1 m ····· M (Example) M9NWM
3 m ····· L (Example) M9NWL
5 m ····· Z (Example) M9NWZ

∗ Since there are other applicable auto switches than listed, refer to page 1236 for details.
∗ For details about auto switches with pre-wired connector, refer to pages 1410 and 1411.
∗ D-A9□/M9□/M9□W/M9□A auto switches are shipped together (not assembled). (Only auto switch mounting brackets are assembled before shipped.)

∗Solid state auto switches marked with "○" are produced upon receipt of order.
∗∗D-B5□/B64/G5/K5□ types are mountable only upon a receipt of order. (Not mountable after the time of shipment)
∗∗∗D-A9□ cannot be mounted on ø50. Select auto switches in brackets.

Adjustable speed.

Built-in throttle valves are provided to enable speed adjustments in each direction.

Operation type can be changed to rod extended when energized or rod retracted when energized.

A manual operation mechanism is provided as standard equipment (non-locking).

An auto switch cylinder with the switch installed can also be manufactured.

Symbol

Air cushion

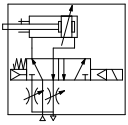

Made to Order

Made to Order Specifications

Click here for details

Symbol	Specifications
-XA□	Change of rod end shape
-XC15	Change of tie-rod length

Refer to pages 1232 to 1236 for cylinders with auto switches.

- Proper auto switch mounting position (detection at stroke end) and mounting height
- Minimum auto switch mounting stroke
- Operating range
- Auto switch mounting bracket: Part no.

Specifications

Bore size (mm)			40	50	63
Fluid			Air		
Proof pressure			1.35 MPa		
Maximum operating pressure			0.9 MPa		
Minimum operating pressure			0.15 MPa		
Ambient and fluid temperature			–10 to 50°C		
Piston speed			50 to 500 mm/s		
Cushion			Air cushion		
Stroke length tolerance			Up to 250 st: $^{+1.0}_{0}$, 251 to 600 st: $^{+1.4}_{0}$		
Rod non-rotating accuracy			±0.8°		
Allowable rotational torque			0.44 N·m or less		
Lubrication			Not required (Non-lube)		
Mounting			Basic, Axial foot, Rod flange, Single clevis Double clevis, Center trunnion		
Allowable kinetic energy (J)	**Air cushion**	**When activated**	2.8	4.6	7.8
		When not activated	0.33	0.56	0.91

∗ No freezing

Solenoid Valve Specifications

Applicable solenoid valve model		V3□08		
Coil rated voltage		Refer to the solenoid valve voltage shown below.		
Electrical entry		Grommet, DIN terminal		
Allowable voltage		–15 to 10% of the rated voltage		
Coil insulation		Class B or equivalent (130°C)		
Apparent power Note)	AC	Inrush	50 Hz	8.5 VA
			60 Hz	7.5 VA
		Holding	50 Hz	7.0 VA
			60 Hz	5.5 VA
Power consumption Note)	DC	6 W		

Note) At the rated voltage.

Solenoid valve voltage

1	100 VAC (50/60 Hz)
2	200 VAC (50/60 Hz)
3	110 VAC (50/60 Hz)
4	220 VAC (50/60 Hz)
5	24 VDC
6	12 VDC
7	240 VAC (50/60 Hz)
8	48 VAC (50/60 Hz)
B	24 VAC (50/60 Hz)
P	100 VDC
V	6 VDC
Y	48 VDC
Z	110 VDC

∗ For other rated voltages, please contact SMC.

Rod Boot Material

Symbol	Rod boot material	Max. ambient temperature
J	Nylon tarpaulin	70°C
K	Heat resistant tarpaulin	110°C∗

∗ Maximum ambient temperature for the rod boot itself.

Standard Stroke

Bore size (mm)	Standard stroke (mm)
40	25, 50, 75, 100, 125, 150, 200, 250, 300, 350, 400, 450, 500∗
50, 63	25, 50, 75, 100, 125, 150, 200, 250, 300, 350, 400, 450, 500, 600∗

Note) The cylinders with the standard strokes indicated above can be delivered in a short term. Intermediate stroke except mentioned above is manufactured upon receipt of order.

- When the auto switch is attached, the minimum stroke is going to be different. Refer to pages 1234 and 1235.
  The minimum stroke length is different in the trunnion type. Refer to pages 1234 and 1235 for further information.

Please consult with SMC for longer strokes than the strokes marked with ∗.

Opening Range of Throttle Valve and Driving Speed

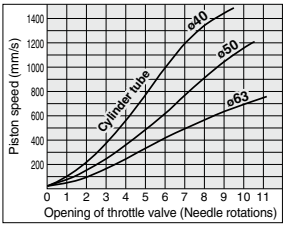

Conditions: Operating pressure 0.5 MPa, Horizontal mounting, No load, Spring return side
- The speeds shown in the graph are for reference.

Weight

(kg)

Bore size (mm)		40	50	63
Basic weight	Basic type	1.20	1.52	2.36
	Axial foot type	1.37	1.72	2.65
	Rod side flange type	1.46	1.93	2.98
	Single clevis type	—	2.25	3.47
	Double clevis type	—	2.30	3.52
	Trunnion type	1.85	2.31	3.75
Additional weight per each 50 mm of stroke		0.20	0.25	0.31
Accessory bracket	Single knuckle	0.23	0.26	0.26
	Double knuckle (with pin)	0.37	0.43	0.43

Calculation: (Example) **CV3KL40-100-1**
- Basic weight·····1.36 (kg)
- Additional weight·····0.20 (kg/50 st)
- Cylinder stroke·····100 (st) 1.36 + 0.20 x 100 ÷ 50 = 1.76 kg

Accessory

Mounting		Basic type	Foot type	Rod side flange type	Single clevis type	Double * clevis type	Center trunnion type
Standard equipment	Rod end nut	●	●	●	●	●	●
	Clevis pin	–	–	–	–	●	–
Option	Single knuckle joint	●	●	●	●	●	●
	Double knuckle joint * (with pin)	●	●	●	●	●	●
	With rod boot	●	●	●	●	●	●

* Pin, plain washer and cotter pin are shipped together with double clevis and double knuckle joint.
* Refer to page 1225 for dimensions and part numbers of the option.
Refer to page 1231 for dimensions of the rod boot.

Handling

1. **Adjusting of the piston speed**
2. **Change of voltage specifications**
3. **Manual operation**
4. **Changing between rod extended when energized and rod retracted when energized.**

Since the operations above **1.** to **4.** are the same as the CV3 series, refer to pages 1218 and 1226.

⚠ Precautions

Be sure to read this before handling the products. Refer to page 9 for safety instructions and pages 1126 to 1128 for common precautions.

Operating Precautions

⚠ Caution

1. **Avoid using the air cylinder in such a way that rotational torque would be applied to the piston rod.**
   If rotational torque is applied, the non-rotating guide will become deformed, causing a loss of non-rotating accuracy. Also, to screw a bracket or a nut onto the threaded portion at the end of the piston rod, make sure the retract the piston rod entirely, and place a wrench on the parallel sections of the rod that protrudes. To tighten, take precautions to prevent the tightening torque from being applied to the non-rotating guide.

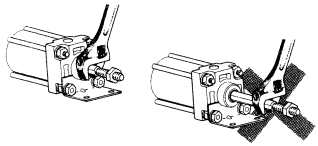

Disassembly/Replacement

⚠ Caution

1. **When replacing rod seals, please contact SMC.**
   Air leakage may be happened, depending on the position in which a rod seal is fitted. Thus, please contact SMC when replacing them.
2. **Do not replace the non-rotating guide.**
   Since the non-rotating guide is press fitted, the entire cover assembly needs be replaced instead of a single part.

Selection

⚠ Warning

1. **Confirm the specifications.**
   Products in this catalog are designed to be used for compressed air systems. If not operated within the designated pressure or temperature, it may damage the products or cause malfunction. (Refer to specifications.)
2. **Energizing continuously for a long period of time**
   When the valve is continuously energized for a long period of time, the performance may deteriorate or effect peripheral equipment adversely since temperature rises when coils generate heat.

Construction

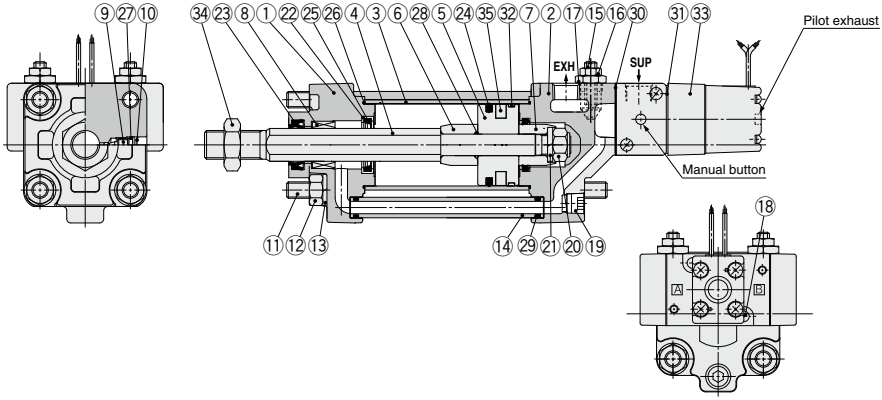

Component Parts

No.	Description	Material	Q'ty	Note
1	**Rod cover**	Aluminum die-casted	1	Black painted
2	**Head cover**	Aluminum die-casted	1	Black painted
3	**Cylinder tube**	Aluminum alloy	1	Hard anodized
4	**Piston rod**	Carbon steel	1	Hard chrome plated
5	**Piston**	Aluminum alloy	1	Trivalent chromated
6	**Cushion ring A**	Rolled steel	1	Trivalent zinc chromated
7	**Cushion ring B**	Rolled steel	1	Trivalent zinc chromated
8	**Non-rotating guide**	Special friction material	1	
9	**Cushion valve**	Steel wire	2	Trivalent zinc chromated
10	**Retaining ring**	Spring steel	2	Phosphate coating
11	**Tie-rod**	Carbon steel	4	Trivalent zinc chromated
12	**Tie-rod nut**	Rolled steel	6	Trivalent black zinc chromated
13	**Spring washer**	Steel wire	6	Trivalent black zinc chromated
14	**Pipe**	Caron steel tube	1	Trivalent zinc chromated
15	**Needle**	Free-cutting steel	2	Electroless nickel plated
16	**Lock nut**	Carbon steel	2	Trivalent zinc chromated
17	**Needle guide**	Free-cutting steel	2	Electroless nickel plated
18	**Hex. socket head cap screw with SW**	Carbon steel	2	Trivalent black zinc chromated

No.	Description	Material	Q'ty	Note
19	**Plug**	Chromium molybdenum steel	1	Trivalent black zinc chromated
20	**Piston nut**	Rolled steel	1	
21	**Spring washer**	Steel wire	1	
22	**Cushion seal holder**	Aluminum alloy	1	
23	**Rod seal**	NBR	1	
24	**Piston seal**	NBR	1	
25	**Cushion seal**	Urethane	2	
26	**Cylinder tube gasket**	NBR	2	
27*	**Cushion valve seal**	NBR	2	
28*	**Piston gasket**	NBR	1	
29	**Pipe gasket**	NBR	2	
30	**Head cover gasket**	NBR	1	
31	**Solenoid gasket**	NBR	1	For single solenoid
			2	For double solenoid
32	**Wear ring**	Resin	1	
33	**Solenoid valve**	—	1	
34	**Rod end nut**	Rolled steel	1	Zinc chromated
35	**Magnet**	—	(1)	

∗ Not replaceable.

Replacement Parts: Seal Kit

Bore size (mm)	Kit no.	Contents
40	CV3K40-PS	Set of nos. above ㉓, ㉔, ㉕, ㉖, ㉙, ㉚
50	CV3K50-PS	
63	CV3K63-PS	

∗ Seal kit includes ㉓, ㉔, ㉕, ㉖, ㉙, ㉚. Order the seal kit, based on each bore size.
(The parts indicated with numbers ㉗ and ㉘ are not replaceable.)

∗ Seal kit includes a grease pack (ø40, ø50: 10 g, ø63 or more: 20 g).
Order with the following part number when only the grease pack is needed.
Grease pack part no.: GR-S-010 (10 g),
GR-S-020 (20 g)

Basic Type: CV3KB□

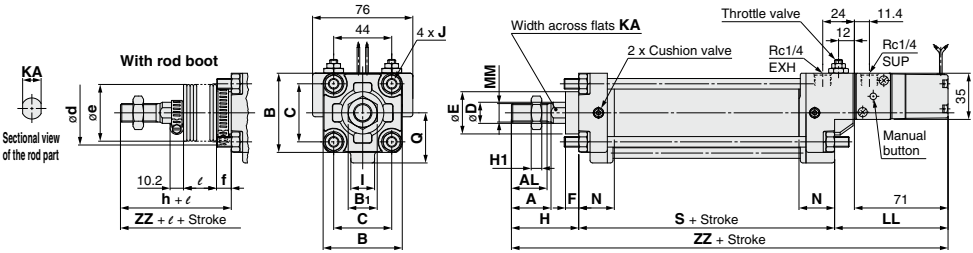

Bore size (mm)	Stroke range* (mm)	A	AL	B	B1	C	D	E	F	H1	I	J	KA	LL	MM	N	Q	S
40	Up to 500	30	27	60	22	44	16	32	10	8	18	M8 x 1.25	14	86	M14 x 1.5	27	38	84
50	Up to 600	35	32	70	27	52	20	40	10	11	18	M8 x 1.25	18	83	M18 x 1.5	30	43.5	90
63	Up to 600	35	32	85	27	64	20	40	10	11	18	M10 x 1.25	18	83	M18 x 1.5	31	49	98

Bore size (mm)	Without rod boot		With rod boot					
	H	ZZ	d	e	f	h	I	ZZ
40	51	221	56	43	11.2	59	1/4 stroke	229
50	58	231	64	52	11.2	66	1/4 stroke	239
63	58	239	64	52	11.2	66	1/4 stroke	247

∗ The minimum stroke of the one with rod boot is 20 mm or more.
∗∗ For dimensions of DIN terminal, refer to page 1225.

- External dimensions of each mounting bracket other than basic type are the same, except KA dimension. Refer to pages 1220 to 1225.
- For accessory, refer to page 1225.

Auto Switch Mounting

Auto Switch Proper Mounting Position (Detection at Stroke End) and Its Mounting Height

<Band mounting type>

D-B5□/B64/B59W

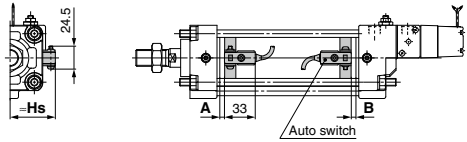

D-A3□
D-G39/K39

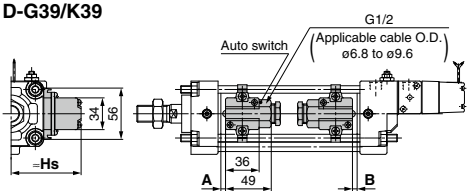

D-G5□/K59
D-G5□W/K59W
D-G59F/G5NT

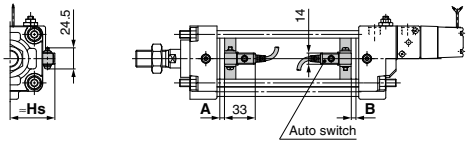

D-A44

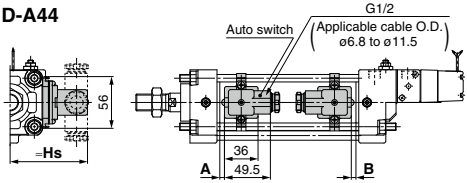

<Tie-rod mounting type>

D-A9□/A9□V
D-M9□/M9□V
D-M9□W/M9□WV
D-M9□A/M9□AV
D-Z7□/Z80
D-Y59□/Y69□/Y7P/Y7PV
D-Y7□W/Y7□WV

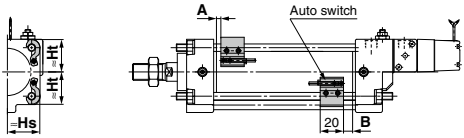

D-A5□/A6□
D-A59W

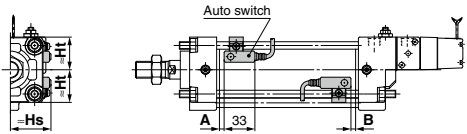

D-A3□C
D-G39C/K39C

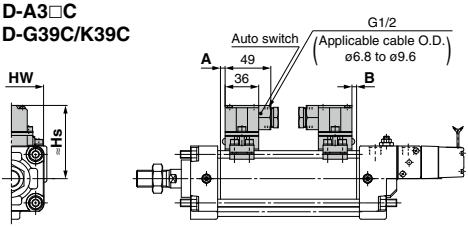

D-F5□/J59
D-F5NT
D-F5□W/J59W
D-F59F

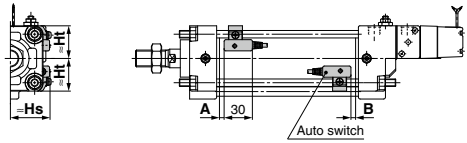

D-A44C

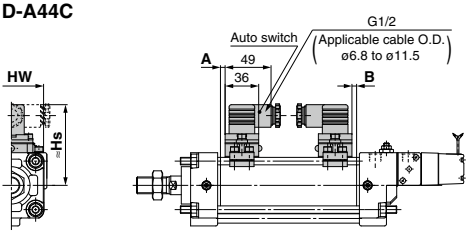

Auto Switch Proper Mounting Position (Detection at Stroke End) and Its Mounting Height

Auto Switch Proper Mounting Position

(mm)

Auto switch model / Bore size	D-M9□ D-M9□V D-M9□W D-M9□WV D-M9□A D-M9□AV		D-A9□ D-A9□V		D-Y59□ D-Y69□ D-Y7P D-Y7PV D-Y7□W D-Y7□WV D-Y7BA D-B59W D-Z7□ D-Z80		D-G39 D-G39C D-K39 D-K39C D-A5□ D-A6□ D-A3□ D-A3□C D-A44 D-A44C		D-G5□ D-K59 D-G5NT D-G5□W D-K59W D-G5BA D-G59F		D-B5□ D-B64		D-F5□ D-J59 D-F59F D-F5□W D-J59W D-F5BA		D-F5NT		D-A59W	
	A	B	A	B	A	B	A	B	A	B	A	B	A	B	A	B	A	B
40	10	8	6	4	3.5	1.5	0	0	2	0	0.5	0	6.5	4.5	11.5	9.5	4	2
50	10	8	—	—	3.5	1.5	0	0	2	0	0.5	0	6.5	4.5	11.5	9.5	4	2
63	12.5	11.5	8.5	7.5	6	5	2.5	1.5	4.5	3.5	3	2	9	8	14	13	6.5	5.5
80	16	14	12	10	9.5	7.5	6	4	8	6	6.5	4.5	12.5	10.5	17.5	15.5	10	8
100	17.5	16.5	13.5	12.5	11	10	7.5	6.5	9.5	8.5	8	7	14	13	19	18	11.5	10.5

Note 1) D-B5□, D-G5□ and D-K5□ types are mountable only upon a receipt of order. (Not mountable after the time of shipment)
Note 2) D-A9□ and D-A9□V types cannot be mounted on ø50
Note 3) Adjust the auto switch after confirming the operating conditions in the actual setting.

Auto Switch Mounting Height

(mm)

Auto switch model / Bore size	D-M9□ D-M9□W D-M9□A D-A9□		D-M9□V D-M9□WV D-M9□AV		D-A9□V		D-Y59□ D-Y7P D-Y7□W D-Y7BA D-Z7□ D-Z80		D-Y69□ D-Y7PV D-Y7□WV		D-G5□ D-K59 D-G5□W D-K59W D-G59F D-G5BA D-G5NT D-B5□ D-B64 D-B59W	D-G39 D-K39 D-A3□	D-A44	D-F5□ D-J59 D-F5□W D-J59W D-F59F D-F5BA D-F5NT		D-A5□ D-A6□ D-A59W		D-G39C D-K39C D-A3□C		D-A44C	
	Hs	Ht	Hs	Ht	Hs	Ht	Hs	Ht	Hs	Ht	Hs	Hs	Hs	Hs	Ht	Hs	Ht	Hs	Ht	Hs	Ht
40	30	30	34	30	31	30	30	30	30	30	37	71.5	81.5	38	31.5	38.5	31.5	73	69	81	69
50	34	34	38	34	—	—	34	34	34	34	42	76.5	86.5	42	35.5	42	35.5	78.5	77	86.5	77
63	41	41	44	41	41.5	41	41	41	41	41	49	83.5	93	47	43	46.5	43	85.5	91	93.5	91
80	49.5	49	52.5	49	50	49	49.5	49	49.5	49	57.5	92	102	53.5	51	53.5	51	94	107	102	107
100	56.5	56	61	56	58.5	56	58.5	55.5	57.5	55.5	68	102.5	112.5	61	57.5	61.5	57.5	104	121	112	121

∗ D-A9□ and D-A9□V types cannot be mounted on ø50

Minimum Stroke For Auto Switch Mounting

n: Number of auto switches (mm)

Auto switch model	No. of auto switches mounted		Mounting brackets other than center trunnion	Center trunnion				
				ø40	ø50	ø63	ø80	ø100
D-A9□	2 (Different surfaces, Same surface), 1		15	80	—	90	105	115
	n		$15 + 40\frac{(n-2)}{2}$ (n = 2, 4, 6, 8···) Note 1)	$80 + 40\frac{(n-4)}{2}$ (n = 4, 8, 12, 16···) Note 2)		$90 + 40\frac{(n-4)}{2}$ (n = 4, 8, 12, 16···) Note 2)	$105 + 40\frac{(n-4)}{2}$ (n = 4, 8, 12, 16···) Note 2)	$115 + 40\frac{(n-4)}{2}$ (n = 4, 8, 12, 16···) Note 2)
D-A9□V	2 (Different surfaces, Same surface), 1		10	80	—	90	105	115
	n		$10 + 30\frac{(n-2)}{2}$ (n = 2, 4, 6, 8···) Note 1)	$80 + 30\frac{(n-4)}{2}$ (n = 4, 8, 12, 16···) Note 2)		$90 + 30\frac{(n-4)}{2}$ (n = 4, 8, 12, 16···) Note 2)	$105 + 30\frac{(n-4)}{2}$ (n = 4, 8, 12, 16···) Note 2)	$115 + 30\frac{(n-4)}{2}$ (n = 4, 8, 12, 16···) Note 2)
D-M9□ **D-M9□W** **D-M9□A**	2 (Different surfaces, Same surface), 1		15	85		100	115	120
	n		$15 + 40\frac{(n-2)}{2}$ (n = 2, 4, 6, 8···) Note 1)	$85 + 40\frac{(n-4)}{2}$ (n = 4, 8, 12, 16···) Note 2)		$100 + 40\frac{(n-4)}{2}$ (n = 4, 8, 12, 16···) Note 2)	$115 + 40\frac{(n-4)}{2}$ (n = 4, 8, 12, 16···) Note 2)	$120 + 40\frac{(n-4)}{2}$ (n = 4, 8, 12, 16···) Note 2)
D-M9□V **D-M9□WV** **D-M9□AV**	2 (Different surfaces, Same surface), 1		10	85		100	115	120
	n		$10 + 30\frac{(n-2)}{2}$ (n = 2, 4, 6, 8···) Note 1)	$85 + 30\frac{(n-4)}{2}$ (n = 4, 8, 12, 16···) Note 2)		$100 + 30\frac{(n-4)}{2}$ (n = 4, 8, 12, 16···) Note 2)	$115 + 30\frac{(n-4)}{2}$ (n = 4, 8, 12, 16···) Note 2)	$120 + 30\frac{(n-4)}{2}$ (n = 4, 8, 12, 16···) Note 2)
D-A5□/A6□ **D-F5□/J59** **D-F5□W/J59W** **D-F59F**	2 (Different surfaces, Same surface), 1		15	90		100	110	120
	n (Same surface)		$15 + 55\frac{(n-2)}{2}$ (n = 2, 4, 6, 8···) Note 1)	$90 + 55\frac{(n-4)}{2}$ (n = 4, 8, 12, 16···) Note 2)		$100 + 55\frac{(n-4)}{2}$ (n = 4, 8, 12, 16···) Note 2)	$110 + 55\frac{(n-4)}{2}$ (n = 4, 8, 12, 16···) Note 2)	$120 + 55\frac{(n-4)}{2}$ (n = 4, 8, 12, 16···) Note 2)
D-A59W	2 (Different surfaces, Same surface)		20	90		100	110	120
	n (Same surface)		$20 + 55\frac{(n-2)}{2}$ (n = 2, 4, 6, 8···) Note 1)	$90 + 55\frac{(n-4)}{2}$ (n = 4, 8, 12, 16···) Note 2)		$100 + 55\frac{(n-4)}{2}$ (n = 4, 8, 12, 16···) Note 2)	$110 + 55\frac{(n-4)}{2}$ (n = 4, 8, 12, 16···) Note 2)	$120 + 55\frac{(n-4)}{2}$ (n = 4, 8, 12, 16···) Note 2)
	1		15	90		100	110	120
D-F5NT	2 (Different surfaces, Same surface), 1		25	110		120	130	140
	n (Same surface)		$25 + 55\frac{(n-2)}{2}$ (n = 2, 4, 6, 8···) Note 1)	$110 + 55\frac{(n-4)}{2}$ (n = 4, 8, 12, 16···) Note 2)		$120 + 55\frac{(n-4)}{2}$ (n = 4, 8, 12, 16···) Note 2)	$130 + 55\frac{(n-4)}{2}$ (n = 4, 8, 12, 16···) Note 2)	$140 + 55\frac{(n-4)}{2}$ (n = 4, 8, 12, 16···) Note 2)
D-B5□/B64 **D-G5□/K59** **D-G5□W** **D-K59W** **D-G59F** **D-G5NT**	2	Different surfaces	15	90		100	110	
		Same surface	75					
	n	Different surfaces	$15 + 50\frac{(n-2)}{2}$ (n = 2, 4, 6, 8···) Note 1)	$90 + 50\frac{(n-4)}{2}$ (n = 4, 8, 12, 16···) Note 2)		$100 + 50\frac{(n-4)}{2}$ (n = 4, 8, 12, 16···) Note 2)	$110 + 50\frac{(n-4)}{2}$ (n = 4, 8, 12, 16···) Note 2)	
		Same surface	$75 + 50(n-2)$ (n = 2, 4, 6, 8···)	$90 + 50(n-2)$ (n = 2, 4, 6, 8···) Note 1)		$100 + 50(n-2)$ (n = 2, 4, 6, 8···) Note 1)	$110 + 50(n-2)$ (n = 2, 4, 6, 8···) Note 1)	
	1		10	90		100	110	
D-B59W	2	Different surfaces	20	90		100	110	
		Same surface	75					
	n	Different surfaces	$20 + 50\frac{(n-2)}{2}$ (n = 2, 4, 6, 8···) Note 1)	$90 + 50\frac{(n-4)}{2}$ (n = 4, 8, 12, 16···) Note 2)		$100 + 50\frac{(n-4)}{2}$ (n = 4, 8, 12, 16···) Note 2)	$110 + 50\frac{(n-4)}{2}$ (n = 4, 8, 12, 16···) Note 2)	
		Same surface	$75 + 50(n-2)$ (n = 2, 3, 4, ···)	$90 + 50(n-2)$ (n = 2, 4, 6, 8···) Note 1)		$100 + 50(n-2)$ (n = 2, 4, 6, 8···) Note 1)	$110 + 50(n-2)$ (n = 2, 4, 6, 8···) Note 1)	
	1		15	90		100	110	
D-A3□ **D-G39** **D-K39**	2	Different surfaces	35	100		100	110	
		Same surface	100					
	n	Different surfaces	$35 + 30(n-2)$ (n = 2, 3, 4, ···)	$100 + 30(n-2)$ (n = 2, 4, 6, 8···) Note 1)		$100 + 30(n-2)$ (n = 2, 4, 6, 8···) Note 1)	$110 + 30(n-2)$ (n = 2, 4, 6, 8···) Note 1)	
		Same surface	$100 + 100(n-2)$ (n = 2, 3, 4, ···)	$100 + 100(n-2)$ (n = 2, 4, 6, 8···) Note 1)			$110 + 100(n-2)$ (n = 2, 4, 6, 8···) Note 1)	
	1		10	100		100	110	
D-A44	2	Different surfaces	35	90		100	110	
		Same surface	55					
	n	Different surfaces	$35 + 30(n-2)$ (n = 2, 3, 4, ···)	$90 + 30(n-2)$ (n = 2, 4, 6, 8···) Note 1)		$100 + 30(n-2)$ (n = 2, 4, 6, 8···) Note 1)	$110 + 30(n-2)$ (n = 2, 4, 6, 8···) Note 1)	
		Same surface	$55 + 50(n-2)$ (n = 2, 3, 4, ···)	$90 + 50(n-2)$ (n = 2, 4, 6, 8···) Note 1)		$100 + 50(n-2)$ (n = 2, 4, 6, 8···) Note 1)	$110 + 50(n-2)$ (n = 2, 4, 6, 8···) Note 1)	
	1		10	90		100	110	

Note 1) When "n" is an odd number, an even number that is one larger than this odd number is used for the calculation.
Note 2) When "n" is an odd number, a multiple of 4 that is larger than this odd number is used for the calculation.

Minimum Stroke For Auto Switch Mounting

n: Number of auto switches (mm)

Auto switch model	No. of auto switches mounted		Mounting brackets other than center trunnion	Center trunnion				
				ø40	ø50	ø63	ø80	ø100
D-A3□C **D-G39C** **D-K39C**	2	Different surfaces	20	100		100	110	
		Same surface	100					
	n	Different surfaces	20 + 35 (n – 2) (n = 2, 3, 4, ···)	100 + 35 (n – 2) (n = 2, 4, 6, 8···) Note 1)		100 + 35 (n – 2) (n = 2, 4, 6, 8···) Note 1)	110 + 35 (n – 2) (n = 2, 4, 6, 8···) Note 1)	
		Same surface	100 + 100 (n – 2) (n = 2, 3, 4, 5, ···)	100 + 100 (n – 2) (n = 2, 4, 6, 8···) Note 1)			110 + 100 (n – 2) (n = 2, 4, 6, 8···) Note 1)	
	1		10	100		100	110	
D-A44C	2	Different surfaces	20	90		100	110	
		Same surface	55					
	n	Different surfaces	25 + 35 (n – 2) (n = 2, 3, 4, ···)	90 + 35 (n – 2) (n = 2, 4, 6, 8···) Note 1)		100 + 35 (n – 2) (n = 2, 4, 6, 8···) Note 1)	110 + 35 (n – 2) (n = 2, 4, 6, 8···) Note 1)	
		Same surface	55 + 50 (n – 2) (n = 2, 3, 4, ···)	90 + 50 (n – 2) (n = 2, 4, 6, 8···) Note 1)		100 + 35 (n – 2) (n = 2, 4, 6, 8···) Note 1)	110 + 50 (n – 2) (n = 2, 4, 6, 8···) Note 1)	
	1		10	90		100	110	
D-Z7□/Z80 **D-Y59□/Y7P** **D-Y7□W**	2 (Different surfaces, Same surface), 1		15	80	85	90	95	105
	n		$15 + 40\frac{(n-2)}{2}$ (n = 2, 4, 6, 8···) Note 1)	$80 + 40\frac{(n-4)}{2}$ (n = 4, 8, 12, 16···) Note 2)	$85 + 40\frac{(n-4)}{2}$ (n = 4, 8, 12, 16···) Note 2)	$90 + 40\frac{(n-4)}{2}$ (n = 4, 8, 12, 16···) Note 2)	$95 + 40\frac{(n-4)}{2}$ (n = 4, 8, 12, 16···) Note 2)	$105 + 40\frac{(n-4)}{2}$ (n = 4, 8, 12, 16···) Note 2)
D-Y69□/Y7PV **D-Y7□WV**	2 (Different surfaces, Same surface), 1		10	65		75	80	90
	n		$10 + 30\frac{(n-2)}{2}$ (n = 2, 4, 6, 8···) Note 1)	$65 + 30\frac{(n-4)}{2}$ (n = 4, 8, 12, 16···) Note 2)		$75 + 30\frac{(n-4)}{2}$ (n = 4, 8, 12, 16···) Note 2)	$80 + 30\frac{(n-4)}{2}$ (n = 4, 8, 12, 16···) Note 2)	$90 + 30\frac{(n-4)}{2}$ (n = 4, 8, 12, 16···) Note 2)

Note 1) When “n” is an odd number, an even number that is one larger than this odd number is used for the calculation.
Note 2) When “n” is an odd number, a multiple of 4 that is larger than this odd number is used for the calculation.

Operating Range

(mm)

Auto switch model	Bore size				
	40	50	63	80	100
D-A9□/A9□V	7	—	9	9	9
D-M9□/M9□V **D-M9□W/M9□WV** **D-M9□A/M9□AV**	4.5	5	5.5	5	6
D-Z7□/Z80	8	7	9	9.5	10.5
D-A3□/A44 **D-A3□C/A44C**	9	10	11	11	11
D-A5□/A6□					
D-B5□/B64					
D-A59W	13	13	14	14	15
D-B59W	14	14	17	16	18
D-Y59□/Y69□ **D-Y7P/Y7PV** **D-Y7□W/Y7□WV**	8	7	5.5	6.5	6.5
D-F5□/J59 **D-F5□W/J59W** **D-F5NT/F59F**	4	4	4.5	4.5	4.5
D-G5□/K59 **D-G5□W/K59W** **D-G5NT/G59F**	5	6	6.5	6.5	7
D-G39/K39 **D-G39C/K39C**	9	9	10	10	11

∗ D-A9□ and D-A9□V types cannot be mounted on ø50.
∗ Since this is a guideline including hysteresis, not meant to be guaranteed.
(Assuming approximately ±30% dispersion.)
There may be the case it will vary substantially depending on an ambient environment.

Auto Switch Mounting Bracket Part No.

<Tie-rod mounting type>

Auto switch model	Bore size (mm)				
	40	50	63	80	100
D-M9□/M9□V **D-M9□W/M9□WV** **D-M9□A/M9□AV** **D-A9□/A9□V**	BA7-040	BA7-040	BA7-063	BA7-080	BA7-080
D-F5□/J59 **D-F5□W/J59W** **D-F59F/F5NT** **D-A5□/A6□** **D-A59W**	BT-04	BT-04	BT-06	BT-08	BT-08
D-G39C/K39C **D-A3□C/A44C**	BA3-040	BA3-050	BA3-063	BA3-080	BA3-100
D-Y59□/Y69□ **D-Y7P/Y7PV** **D-Y7□W/Y7□WV** **D-Y7BA** **D-Z7□/Z80**	BA4-040	BA4-040	BA4-063	BA4-080	BA4-080

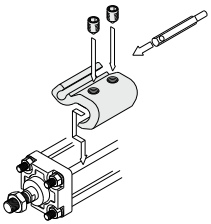

· Mounting example of D-M9□(V)/M9□W(V)/M9□A(V)/A9□(V)

<Band mounting type>

Auto switch model	Bore size (mm)				
	40	50	63	80	100
D-G39/K39 **D-A3□/A44**	BD1-04M	BD1-05M	BD1-06M	BD1-08M	BD1-10M
D-G5□/K59 **D-G5□W/K59W** **D-G59F** **D-G5NT** **D-B5□/B64** **D-B59W**	BA-04	BA-05	BA-06	BA-08	BA-10

Note) The auto switch mounting bracket is included in the D-A3□C/A44C/G39C/K39C types. Specify the part number as follows depending on the cylinder size when ordering.
Ex.) ø40: D-A3□C-4, ø50: D-A3□C-5, ø63: D-A3□C-6
ø80: D-A3□C-8, ø100: D-A3□C-10

Other than the models listed in “How to Order”, the following auto switches are applicable.
For detailed specifications, refer to pages 1341 to 1435.

Auto switch type	Model	Electrical entry (Fetching direction)	Features
Reed	D-A93V, A96V	Grommet (Perpendicular)	—
	D-A90V		Without indicator light
	D-A53, A56, B53, Z73, Z76	Grommet (In-line)	—
	D-A67, Z80		Without indicator light
Solid state	D-M9NV, M9PV, M9BV	Grommet (Perpendicular)	—
	D-Y69A, Y69B, Y7PV		
	D-M9NWV, M9PWV, M9BWV		Diagnostic indication (2-color indicator)
	D-Y7NWV, Y7PWV, Y7BWV		
	D-M9NAV, M9PAV, M9BAV		Water resistant (2-color indicator)
	D-Y59A, Y59B, Y7P	Grommet (In-line)	—
	D-F59, F5P, J59		
	D-Y7NW, Y7PW, Y7BW		Diagnostic indication (2-color iindicator)
	D-F59W, F5PW, J59W		
	D-F5NT, G5NT		With timer

∗ With pre-wired connector is also available in solid state auto switches.
For details, refer to pages 1410 and 1411.
∗ Normally closed (NC = b contact), solid state auto switches (D-M9□E(V)/Y7G/Y7H type) are also available. For details, refer to pages 1360 and 1362.

SMC

Valve Mounted Cylinder
Double Acting
CVS1 Series
ø40, ø50, ø63, ø80, ø100

How to Order

Mounting type

B	Basic type
L	Axial foot type
F	Rod side flange type
G	Head side flange type
C	Single clevis type
D	Double clevis type
T	Center trunnion type

Cylinder stroke (mm)
Refer to page 1239 for standard strokes.

Bore size

40	40 mm
50	50 mm
63	63 mm
80	80 mm
100	100 mm

Electrical entry

Nil	Grommet
T	Conduit terminal
D	DIN terminal
DL	DIN terminal with indicator light
TZ	Conduit terminal with surge voltage suppressor

Made to Order
Refer to page 1239 for details.

Solenoid valve

Nil	2 position single (VS4124-00□□-X46)
W	2 position double (VS4224-00□□)
Y	3 position closed center (VS4324-00□□)
Z	3 position exhaust center (VS4424-00□□)

CVS1 L □ N 40 – 100 □ — 1 W D – □

With auto switch: CDVS1 L □ N 40 – 100 □ – M9BW □ – 1 W D – □

With Auto Switch
(Built-in magnet)

Built-in Magnet Cylinder Model
If a built-in magnet cylinder without an auto switch is required, there is no need to enter the symbol for the auto switch.
(Example) CDVS1LN40-100-1

Type

Nil	Aluminum tube
F*	Steel tube

* Not available with auto switch.

Suffix for cylinder

Rod boot	J	Nylon tarpaulin
	K	Heat resistant tarpaulin
Cushion	N	Rubber bumper
	R	With cushion on rod end
	H	With cushion on head end
	Nil	With cushion on both ends

* When specifying symbol more than one, combine symbols alphabetically.

Auto switch

Nil	Without auto switch

* For the applicable auto switch model, refer to the table below.

Number of auto switches

Nil	2 pcs.	S	1 pc.
3	3 pcs.	n	"n" pcs.

Solenoid valve voltage
Refer to page 1239 for the solenoid valve voltage.

Applicable Auto Switches/Refer to pages 1341 to 1435 for further information on auto switches.

Type	Special function	Electrical entry	Indicator light	Wiring (Output)	Load voltage DC	Load voltage DC	Load voltage AC	Auto switch model: Tie-rod mounting	Auto switch model: Band mounting	Lead wire length (m): 0.5 (Nil)	1 (M)	3 (L)	5 (Z)	Pre-wired connector	Applicable load	
Solid state auto switch	—	Grommet	Yes	3-wire (NPN)	24 V	5 V, 12 V	—	M9N	—	●	●	●	○	○	IC circuit	Relay, PLC
								—	G59**	●	—	●	○	○		
				3-wire (PNP)				M9P	—	●	●	●	○	○		
								—	G5P**	●	—	●	○	○		
				2-wire		12 V		M9B	—	●	●	●	○	○	—	
								—	K59**	●	—	●	○	○		
		Terminal conduit		3-wire (NPN)	24 V	12 V	—	G39C	G39	—	—	—	—	—	IC circuit	
				2-wire				K39C	K39	—	—	—	—	—		
	Diagnostic indication (2-color indicator)	Grommet		3-wire (NPN)		5 V, 12 V		M9NW	—	●	●	●	○	○		
								—	G59W**	●	—	●	○	○		
				3-wire (PNP)				M9PW	—	●	●	●	○	○		
								—	G5PW**	●	—	●	○	○		
				2-wire		12 V		M9BW	—	●	●	●	○	○	—	
								—	K59W**	●	—	●	○	○		
	Water resistant (2-color indicator)			3-wire (NPN)		5 V, 12 V		M9NA*1	—	○	○	●	○	○	IC circuit	
				3-wire (PNP)				M9PA*1	—	○	○	●	○	○		
				2-wire		12 V		M9BA*1	—	○	○	●	○	○	—	
	With diagnostic output (2-color indicator)			4-wire (NPN)		5 V, 12 V		F59F	G59F**	●	—	●	○	○	IC circuit	
Reed auto switch	—	Grommet	Yes	3-wire (NPN equivalent)	—	5 V	—	A96 [Z76]***	—	●	—	●	—	—	IC circuit	—
			No	2-wire	24 V	12 V	100 V	A93 [Z73]***,*2	—	●	●	●	●	—	—	
							100 V or less	A90 [Z80]***	—	●	—	●	—	—	IC circuit	Relay, PLC
			Yes				100 V, 200 V	A54	B54**	●	—	●	●	—	—	
							200 V or less	A64	B64**	●	—	●	—	—		
		Terminal conduit					—	A33C	A33	—	—	—	—	—		PLC
			Yes				100 V, 200 V	A34C	A34	—	—	—	—	—		Relay, PLC
		DIN terminal						A44C	A44	—	—	—	—	—		
	Diagnostic indication (2-color indicator)	Grommet				—	–	A59W	B59W**	●	—	●	—	—		

*1 Water resistant type auto switches can be mounted on the above models, but in such case SMC cannot guarantee water resistance. Consult with SMC regarding water resistant types with the above model numbers.
*2 1 m type lead wire is only applicable to D-A93.
* Lead wire length symbols: 0.5 m ····· Nil (Example) M9NW
1 m ····· M (Example) M9NWM
3 m ····· L (Example) M9NWL
5 m ····· Z (Example) M9NWZ
* Since there are other applicable auto switches than listed, refer to page 1251 for details.
* For details about auto switches with pre-wired connector, refer to pages 1410 and 1411.
* D-A9□/M9□/M9□W/M9□A auto switches are shipped together (not assembled). (Only auto switch mounting brackets are assembled before shipped.)

* Solid state auto switches marked with "○" are produced upon receipt of order.
** D-B5□/G5□/K5□ types are mountable only upon a receipt of order. (Not mountable after the time of shipment)
*** D-A9□ cannot be mounted on ø50. Select auto switches in brackets.

Speed controller installed

Operation type can be changed to rod extended when energized or rod retracted when energized.

A selection of solenoid valves is possible.

Single, double and 3 position solenoid valves are mountable.

An auto switch cylinder with the switch installed can also be manufactured.

Symbol

Air cushion

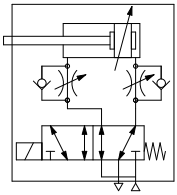

Made to Order Specifications

Click here for details

Symbol	Specifications
-XA□	Change of rod end shape
-XC4	With heavy duty scraper
-XC6	Made of stainless steel
-XC14	Change of trunnion bracket mounting position
-XC15	Change of tie-rod length

Refer to pages 1246 to 1251 for cylinders with auto switches.

- Proper auto switch mounting position (detection at stroke end) and mounting height
- Minimum auto switch mounting stroke
- Operating range
- Auto switch mounting bracket: Part no.

Specifications

Bore size (mm)			40	50	63	80	100
Fluid			Air				
Action			Double acting				
Proof pressure			1.5 MPa				
Maximum operating pressure			1.0 MPa				
Ambient and fluid temperatures			–10 to 60°C *1				
Minimum operating pressure			0.05 MPa				
Piston speed			50 to 500 mm/s *3				
Cushion			Air cushion or Rubber bumper				
Stroke length tolerance			Up to 250 st: $^{+1.0}_{0}$, 251 to 1000 st: $^{+1.4}_{0}$				
Lubrication			Not required (Non-lube)				
Mounting			Basic type, Foot type, Rod side flange type, Head side flange type, Single clevis type, Double clevis type, Center trunnion type				
Port size			Rc 1/4				
Allowable kinetic energy (J) *2	**Air cushion**	**When activated**	2.8	4.6	7.8	16	29
		When not activated	0.33	0.56	0.91	1.5	2.68
	Rubber bumper		1.8	3.6	6.0	12.0	12.0

*1 No freezing
*2 Activate the air cushion when operating the cylinder. If this is not done, the piston rod assembly or the tie-rods will be damaged when the allowable kinetic energy exceeds the values shown in the above table.
*3 For operating piston speed for each size, refer to page 1240.

Solenoid Valve Specifications

Applicable solenoid valve model		VS4□24		
Coil rated voltage		Refer to the solenoid valve voltage shown below.		
Electrical entry		Grommet, Conduit terminal, DIN terminal, DIN terminal with indicator light, Conduit terminal with surge voltage suppressor		
Allowable voltage		–15 to 10% of the rated voltage		
Coil insulation		Class B or equivalent (130°C)		
Apparent power Note)	**AC**	Inrush	50 Hz	100 VA
			60 Hz	90 VA
		Holding	50 Hz	20 VA
			60 Hz	14 VA
Power consumption Note)	**DC**	13.2 W		

Note) At the rated voltage.

Solenoid valve voltage

1	100 VAC (50/60 Hz)
2	200 VAC (50/60 Hz)
3	110 VAC (50/60 Hz)
4	220 VAC (50/60 Hz)
5	24 VDC
6	12 VDC
B	24 VAC (50/60 Hz)
P	100 VDC
W	32 VDC
Y	48 VDC
Z	110 VDC

For other rated voltages, please contact SMC.

Standard Strokes

(mm)

Bore size	Standard stroke	
	Stroke range ①	Stroke range ②
40	25, 50, 75, 100, 125, 150, 200, 250, 300, 350, 400, 450, 500	Up to 1000
50, 63	25, 50, 75, 100, 125, 150, 200, 250, 300, 350, 400, 450, 500, 600	
80, 100	25, 50, 75, 100, 125, 150, 200, 250, 300, 350, 400, 450, 500, 600, 700	

Note 1) Intermediate strokes not listed above are produced upon receipt of order.
Note 2) Applicable strokes should be confirmed according to the usage. For details, refer to "Air Cylinders Model Selection" in the **Web Catalog**. In addition, the products that exceed the stroke range ① might not be able to fulfill the specifications due to the deflection etc.
Note 3) Please consult with SMC for manufacturability and the part numbers when exceeding the stroke range ②.
Note 4) The minimum stroke length is different in the trunnion type and types with auto switch. Refer to pages 1248 and 1249.

Rod Boot Material

Symbol	Rod boot material	Max. ambient temperature
J	Nylon tarpaulin	70°C
K	Heat resistant tarpaulin	110°C *

* Maximum ambient temperature for the rod boot itself.

Accessory

Mounting		Basic type	Axial foot type	Rod side flange type	Head side flange type	Single clevis type	Double* clevis type	Center trunnion type
Standard equipment	Rod end nut	●	●	●	●	●	●	●
	Clevis pin	–	–	–	–	–	●	–
Option	Single knuckle joint	●	●	●	●	●	●	●
	Double knuckle joint * (with pin)	●	●	●	●	●	●	●
	With rod boot	●	●	●	●	●	●	●

* Pin, plain washer and cotter pin are packaged together with double clevis and double knuckle joint.
* Refer to page 1245 for dimensions and part numbers of the option.
Refer to page 1242 for dimensions of the rod boot.

Weight

(kg)

Bore size (mm)		40	50	63	80	100
Basic weight	Basic type	2.32(2.42)	2.73(2.86)	3.67(3.88)	5.25(5.56)	6.81(7.21)
	Axial foot type	2.49(2.59)	2.93(3.06)	3.96(4.17)	6.04(6.35)	7.74(8.14)
	Rod side flange type	2.72(2.82)	3.33(3.46)	4.63(4.84)	7.09(7.40)	9.13(9.53)
	Head side flange type	2.82(2.92)	3.47(3.60)	4.63(4.84)	7.09(7.40)	9.13(9.53)
	Single clevis type	2.58(2.68)	3.17(3.30)	4.42(4.63)	6.63(6.94)	9.11(9.51)
	Double clevis type	2.57(2.67)	3.15(3.28)	4.44(4.65)	6.62(6.93)	9.13(9.53)
	Trunnion type	2.92(3.07)	3.47(3.66)	5.01(5.38)	7.58(8.03)	10.33(10.92)
Additional weight per each 50 mm of stroke		0.20(0.28)	0.25(0.35)	0.31(0.43)	0.46(0.70)	0.58(0.87)
Accessory bracket	Single knuckle	0.23	0.26	0.26	0.60	0.83
	Double knuckle (with pin)	0.37	0.43	0.43	0.87	1.27

* ( ): Steel tube type

Calculation: (Example) **CVS1L40-100-1**
- Basic weight·····2.48 (kg)
- Additional weight·····0.20 (kg/50 st)
- Cylinder stroke·····100 (st) 2.48 + 0.20 x 100 ÷ 50 = 2.88 kg

Mounting Bracket Part No.

Bore size (mm)	40	50	63	80	100
Axial foot *	CA1-L04	CA1-L05	CA1-L06	CA1-L08	CA1-L10
Flange	CA1-F04	CA1-F05	CA1-F06	CA1-F08	CA1-F10
Single clevis	CA1-C04	CA1-C05	CA1-C06	CA1-C08	CA1-C10
Double clevis **	CA1-D04	CA1-D05	CA1-D06	CA1-D08	CA1-D10

* Order two foot brackets per cylinder.
** Accessories for each mounting bracket are as follows.
Foot, Flange, Single clevis: Body mounting bolts, Spring washer
Double clevis: Body mounting bolts, Spring washer, Clevis pin, Flat washer, Cotter pin.

Opening Range of Throttle Valve and Piston Speed

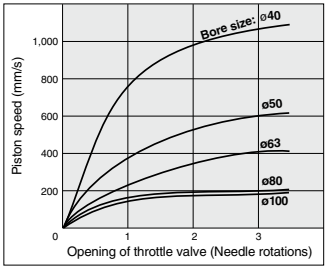

Conditions: Operating pressure 0.5 MPa,
Horizontal mounting, No load, Extending stroke
• The speed shown above are for reference.

Piston Speed Adjustment Procedure

1. To slow down the piston speed, screw in the speed controller needle clockwise, which reduces the amount of air that is discharged.
2. The speed controller needle opens fully when it is loosened 3 1/2 turns from its fully closed position. After the specified speed has been set, secure the needle with the lock nut.

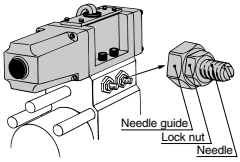

Changing between Rod Extended when Energized and Rod Retracted when Energized

1. This is possible by reversing the SUP port and EXH port piping.

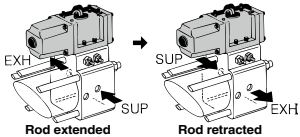

Rod extended when energized **Rod retracted when energized**

2. This is possible by inverting the solenoid valve direction 180°.

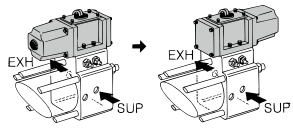

Rod extended when energized **Rod retracted when energized**

Manual Operation

Using a screwdriver or its equivalent, push the center of the rubber plug on the head of the solenoid cap of the solenoid valve.
(It is not necessary to remove the rubber plug.)

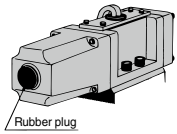

Construction

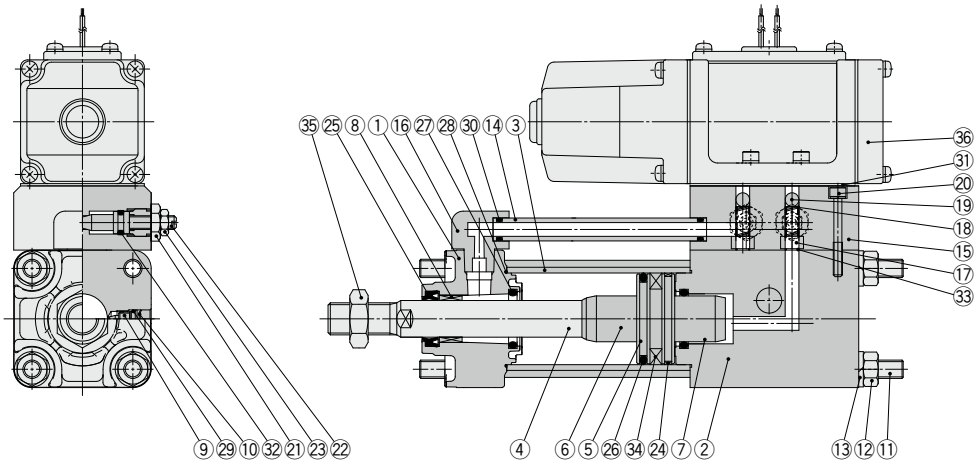

Component Parts

No.	Description	Material	Q'ty	Note
1	**Rod cover**	Aluminum die-casted	1	Black painted
2	**Head cover**	Aluminum alloy	1	Black painted
3	**Cylinder tube**	Aluminum alloy	1	Hard anodized
4	**Piston rod**	Carbon steel	1	Hard chrome plating
5	**Piston**	Aluminum alloy	1	
6	**Cushion ring A**	Aluminum alloy	1	Anodized
7	**Cushion ring B**	Aluminum alloy	1	Anodized
8*	**Bushing**	Bearing alloy	1	
9	**Cushion valve**	Steel wire	2	Trivalent zinc chromated
10	**Retaining ring**	Spring steel	2	Phosphate coating
11	**Tie-rod**	Carbon steel	4	Trivalent zinc chromated
12	**Tie-rod nut**	Rolled steel	8	Trivalent black zinc chromated
13	**Spring washer**	Steel wire	8	Trivalent black zinc chromated
14	**Pipe**	Carbon steel tube	1	Trivalent zinc chromated
15	**Sub-plate**	Aluminum die-casted	1	Platinum silver
16*	**Guide tube fitting**	Aluminum die-casted	1	Platinum silver
17*	**Valve port**	Rolled steel	2	Electroless nickel plating
18*	**Check spring**	Spring steel	2	Trivalent zinc chromated

No.	Description	Material	Q'ty	Note
19*	**Check ball**	Polyurethane rubber	2	Ball 9/32
20	**Hex. socket head cap screw with SW**	Chromium molybdenum steel	4	Trivalent zinc chromated
21	**Needle guide**	Carbon steel	2	Trivalent zinc chromated
22	**Speed adjustment needle**	Rolled steel	2	Electroless nickel plating
23	**Lock nut**	Carbon steel	2	Trivalent zinc chromated
24	**Wear ring**	Resin	1	
25	**Rod seal**	NBR	1	
26	**Piston seal**	NBR	1	
27*	**Cushion seal**	Urethane	2	
28	**Cylinder tube gasket**	NBR	2	
29*	**Cushion valve seal**	NBR	2	
30	**Pipe gasket**	NBR	2	
31	**Gasket**	NBR	1	
32	**Speed adjustment needle seal**	NBR	2	
33	**Valve port gasket**	NBR	4	
34	**Magnet**	—	(1)	
35	**Rod end nut**	Rolled steel	1	Trivalent zinc chromated
36	**Solenoid valve**	—	1	VS4124-00□-X46

Note) Add "-X46" to the end of the part numbers for single solenoid type.
• How to order solenoid valves/VS4□24-00 Voltage Electrical entry
* Not replaceable.

Replacement Parts: Seal Kit

Bore size (mm)	Kit no.	Contents
40	CVS1N40-PS	Set of nos. above ㉕, ㉖, ㉘, ㉚, ㉝
50	CVS1N50-PS	
63	CVS1N63-PS	
80	CVS1N80-PS	
100	CVS1N100-PS	

* Seal kit includes ㉕, ㉖, ㉘, ㉚, and ㉝. Order the seal kit based on each bore size.
(The parts indicated with numbers ㉗ and ㉙ are not replaceable.)
* Seal kit includes a grease pack (ø40, ø50: 10 g, ø63, ø80: 20 g, ø100: 30 g).
Order with the following part number when only the grease pack is needed.
Grease pack part no.: GR-S-010 (10 g), **GR-S-020** (20 g)

Basic Type: CVS1B

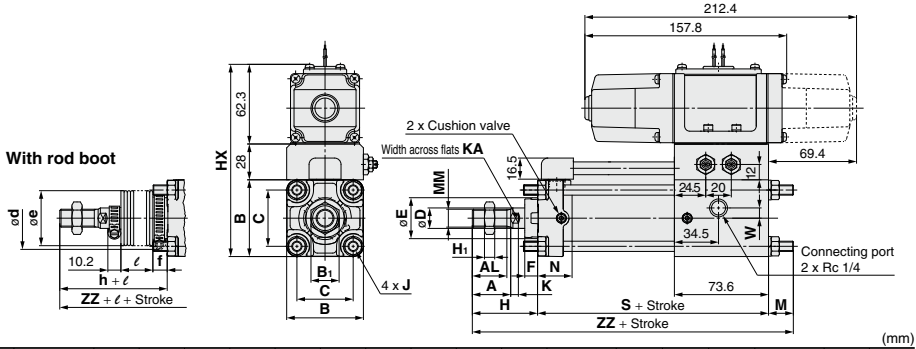

(mm)

Bore size (mm)	Stroke* range (mm)	A	AL	B	B_1	C	D	E	F	H_1	HX	J	K	KA	M	MM	N	S
40	Up to 1000	30	27	60	22	44	16	32	10	8	150	M8 x 1.25	6	14	19.4	M14 x 1.5	27	130.6
50	Up to 1000	35	32	70	27	52	20	40	10	11	160	M8 x 1.25	7	18	16.4	M18 x 1.5	30	133.6
63	Up to 1000	35	32	85	27	64	20	40	10	11	175	M10 x 1.25	7	18	18.4	M18 x 1.5	31	140.6
80	Up to 1000	40	37	102	32	78	25	52	14	13	192	M12 x 1.75	10	22	21.4	M22 x 1.5	37	152.6
100	Up to 1000	40	37	116	41	92	30	52	14	16	206	M12 x 1.75	10	26	21.4	M26 x 1.5	40	159.6

Bore size (mm)	W	Without rod boot		With rod boot					
		H	ZZ	d	e	f	h	ℓ	ZZ
40	8	51	201	56	43	11.2	59	1/4 stroke	209
50	8	58	208	64	52	11.2	66	1/4 stroke	216
63	8	58	217	64	52	11.2	66	1/4 stroke	225
80	0	71	245	76	65	12.5	80	1/4 stroke	254
100	0	72	253	76	65	14	81	1/4 stroke	262

∗ The minimum stroke of the one with rod boot is 20 mm or more.

Axial Foot Type: CVS1L

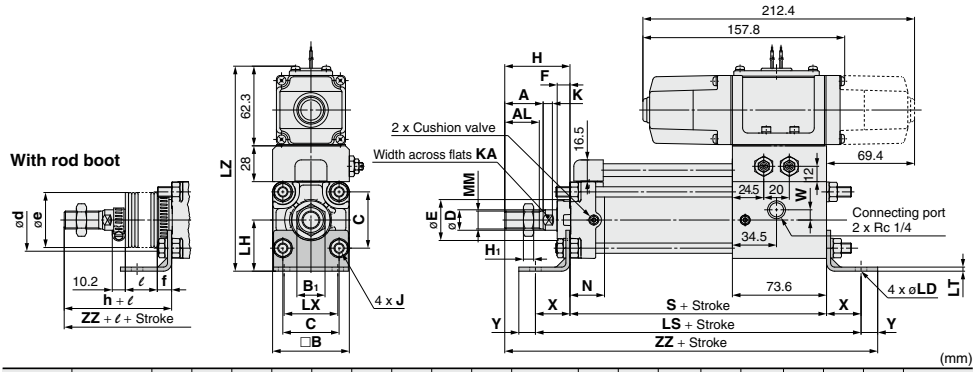

(mm)

Bore size (mm)	Stroke* range (mm)	A	AL	B	B_1	C	D	E	F	H_1	J	K	KA	LD	LH	LS	LT	LX	LZ	MM
40	Up to 1000	30	27	60	22	44	16	32	10	8	M8 x 1.25	6	14	9	40	184.6	3.2	42	160	M14 x 1.5
50	Up to 1000	35	32	70	27	52	20	40	10	11	M8 x 1.25	7	18	9	45	187.6	3.2	50	170	M18 x 1.5
63	Up to 1000	35	32	85	27	64	20	40	10	11	M10 x 1.25	7	18	11.5	50	208.6	3.2	59	182	M18 x 1.5
80	Up to 1000	40	37	102	32	78	25	52	14	13	M12 x 1.75	10	22	13.5	65	240.6	4.5	76	206	M22 x 1.5
100	Up to 1000	40	37	116	41	92	30	52	14	16	M12 x 1.75	10	26	13.5	75	245.6	6	92	223	M26 x 1.5

Bore size (mm)	N	S	W	X	Y	Without rod boot		With rod boot					
						H	ZZ	d	e	f	h	ℓ	ZZ
40	27	130.6	8	27	13	51	221.6	56	43	11.2	59	1/4 stroke	229.6
50	30	133.6	8	27	13	58	231.6	64	52	11.2	66	1/4 stroke	239.6
63	31	140.6	8	34	16	58	248.6	64	52	11.2	66	1/4 stroke	256.6
80	37	152.6	0	44	16	71	283.6	76	65	12.5	80	1/4 stroke	292.6
100	40	159.6	0	43	17	72	291.6	76	65	14	81	1/4 stroke	300.6

∗ The minimum stroke of the one with rod boot is 20 mm or more.
∗∗ Long stroke

Rod Side Flange Type: CVS1F

With rod boot

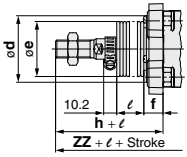

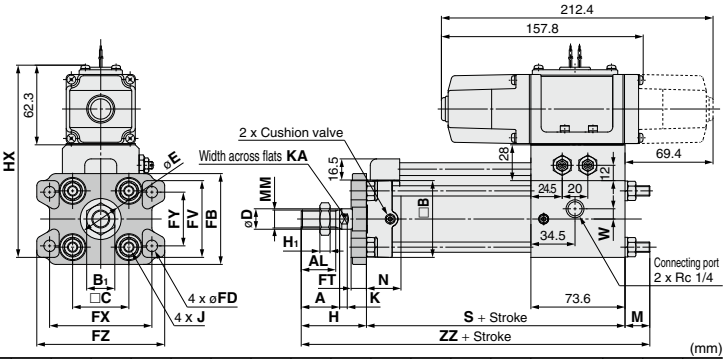

(mm)

Bore size (mm)	Stroke* range (mm)	A	AL	B	B_1	C	D	E	FB	FD	FT	FV	FX	FY	FZ	H_1	HX	J	K	KA	M
40	Up to 1000	30	27	60	22	44	16	32	71	9	12	60	80	42	100	8	150	M8 x 1.25	6	14	19.4
50	Up to 1000	35	32	70	27	52	20	40	81	9	12	70	90	50	110	11	160	M8 x 1.25	7	18	16.4
63	Up to 1000	35	32	85	27	64	20	40	101	11.5	15	86	105	59	130	11	175	M10 x 1.25	7	18	18.4
80	Up to 1000	40	37	102	32	78	25	52	119	13.5	18	102	130	76	160	13	192	M12 x 1.75	10	22	21.4
100	Up to 1000	40	37	116	41	92	30	52	133	13.5	18	116	150	92	180	16	206	M12 x 1.75	10	26	21.4

Bore size (mm)	MM	N	S	W	Without rod boot		With rod boot					
					H	ZZ	d**	e	f	ℓ		ZZ
40	M14 x 1.5	27	130.6	8	51	201	52	43	15	59	1/4 stroke	209
50	M18 x 1.5	30	133.6	8	58	208	58	52	15	66	1/4 stroke	216
63	M18 x 1.5	31	140.6	8	58	217	58	52	17.5	66	1/4 stroke	225
80	M22 x 1.5	37	152.6	0	71	245	80	65	21.5	80	1/4 stroke	254
100	M26 x 1.5	40	159.6	0	72	253	80	65	21.5	81	1/4 stroke	262

* The minimum stroke of the one with rod boot is 20 mm or more.
** Long stroke
*** Machine larger holes than the outside diameter ød of the mounting bracket for rod boot when mounting the rod boot part to the through for mounting.

Head Side Flange Type: CVS1G

With rod boot

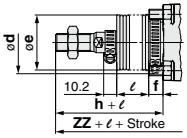

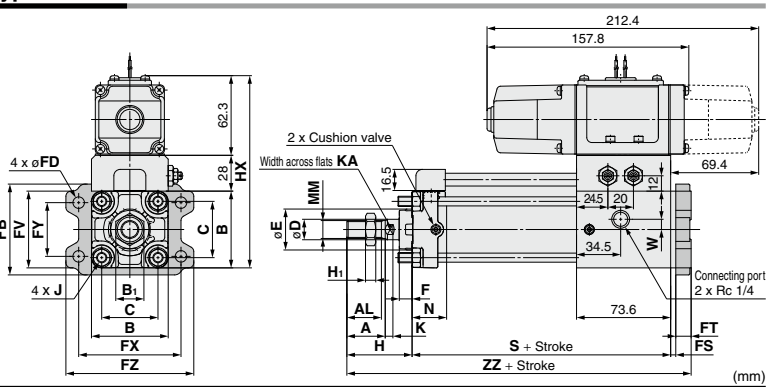

(mm)

Bore size (mm)	Stroke* range (mm)	A	AL	B	B_1	C	D	E	F	FB	FD	FT	FV	FX	FY	FZ	H_1	HX	J	K
40	Up to 1000	30	27	60	22	44	16	32	10	71	9	12	60	80	42	100	8	150	M8 x 1.25	6
50	Up to 1000	35	32	70	27	52	20	40	10	81	9	12	70	90	50	110	11	160	M8 x 1.25	7
63	Up to 1000	35	32	85	27	64	20	40	10	101	11.5	15	86	105	59	130	11	175	M10 x 1.25	7
80	Up to 1000	40	37	102	32	78	25	52	14	119	13.5	18	102	130	76	160	13	192	M12 x 1.75	10
100	Up to 1000	40	37	116	41	92	30	52	14	133	13.5	18	116	150	92	180	16	206	M12 x 1.75	10

Bore size (mm)	KA	MM	N	S	W	Without rod boot		With rod boot					
						H	ZZ	d	e	f	h	ℓ	ZZ
40	14	M14 x 1.5	27	130.6	8	51	197.6	56	43	11.2	59	1/4 stroke	205.6
50	18	M18 x 1.5	30	133.6	8	58	207.6	64	52	11.2	66	1/4 stroke	215.6
63	18	M18 x 1.5	31	140.6	8	58	213.6	64	52	11.2	66	1/4 stroke	221.6
80	22	M22 x 1.5	37	152.6	0	71	241.6	76	65	12.5	80	1/4 stroke	250.6
100	26	M26 x 1.5	40	159.6	0	72	249.6	76	65	14	81	1/4 stroke	258.6

* The minimum stroke of the one with rod boot is 20 mm or more.

Single Clevis Type: CVS1C

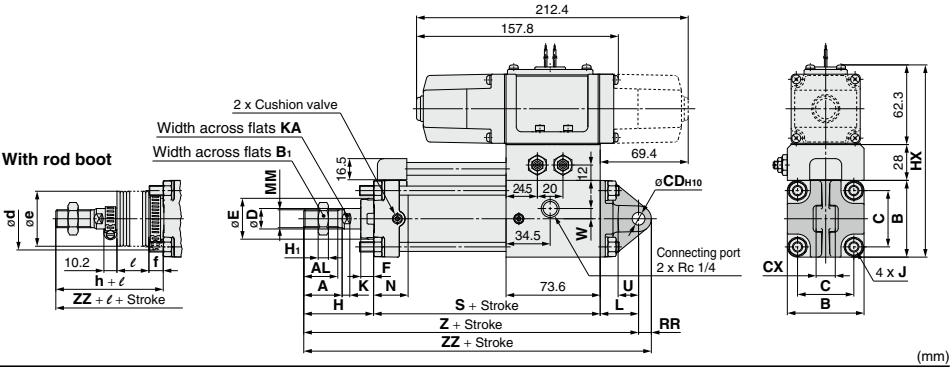

(mm)

Bore size (mm)	Stroke* range (mm)	A	AL	B	B_1	C	CD_{H10}	CX	D	E	F	H_1	HX	J	K	KA	L	MM
40	Up to 1000	30	27	60	22	44	$10^{+0.058}_{0}$	$15^{-0.1}_{-0.3}$	16	32	10	8	150	M8 x 1.25	6	14	30	M14 x 1.5
50	Up to 1000	35	32	70	27	52	$12^{+0.070}_{0}$	$18^{-0.1}_{-0.3}$	20	40	10	11	160	M8 x 1.25	7	18	35	M18 x 1.5
63	Up to 1000	35	32	85	27	64	$16^{+0.070}_{0}$	$25^{-0.1}_{-0.3}$	20	40	10	11	175	M10 x 1.25	7	18	40	M18 x 1.5
80	Up to 1000	40	37	102	32	78	$20^{+0.084}_{0}$	$31.5^{-0.1}_{-0.3}$	25	52	14	13	192	M12 x 1.75	10	22	48	M22 x 1.5
100	Up to 1000	40	37	116	41	92	$25^{+0.084}_{0}$	$35.5^{-0.1}_{-0.3}$	30	52	14	16	206	M12 x 1.75	10	26	58	M26 x 1.5

Bore size (mm)	N	RR	S	U	W	Without rod boot			With rod boot						
						H	Z	ZZ	d	e	f	h	ℓ	Z	ZZ
40	27	10	130.6	16	8	51	211.6	221.6	56	43	11.2	59	1/4 stroke	219.6	229.6
50	30	12	133.6	19	8	58	266.6	238.6	64	52	11.2	66	1/4 stroke	234.6	246.6
63	31	16	140.6	23	8	58	238.6	254.6	64	52	11.2	66	1/4 stroke	246.6	262.6
80	37	20	152.6	28	0	71	271.6	291.6	76	65	12.5	80	1/4 stroke	280.6	300.6
100	40	25	159.6	36	0	72	289.6	314.6	76	65	14	81	1/4 stroke	298.6	323.6

∗ The minimum stroke of the one with rod boot is 20 mm or more.

Double Clevis Type: CVS1D

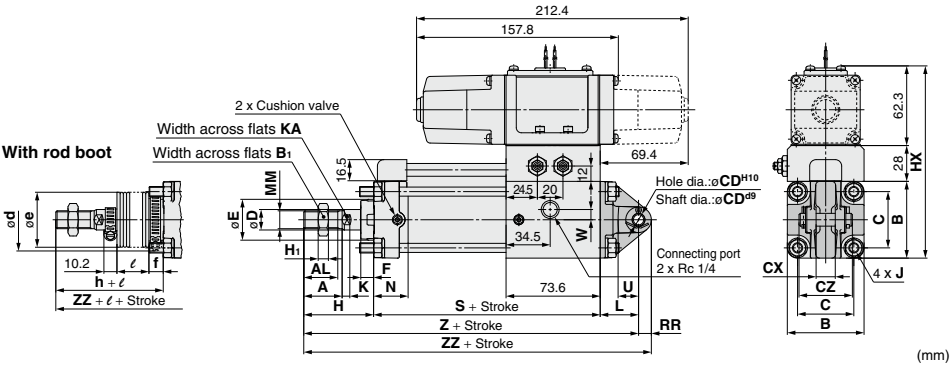

(mm)

Bore size (mm)	Stroke* range (mm)	A	AL	B	B_1	C	CD_{H10}	CX	CZ	D	E	F	H_1	HX	J	K	KA	L
40	Up to 1000	30	27	60	22	44	$10^{+0.058}_{0}$	$15^{+0.3}_{+0.1}$	29.5	16	32	10	8	150	M8 x 1.25	6	14	30
50	Up to 1000	35	32	70	27	52	$12^{+0.070}_{0}$	$18^{+0.3}_{+0.1}$	38	20	40	10	11	160	M8 x 1.25	7	18	35
63	Up to 1000	35	32	85	27	64	$16^{+0.070}_{0}$	$25^{+0.3}_{+0.1}$	49	20	40	10	11	175	M10 x 1.25	7	18	40
80	Up to 1000	40	37	102	32	78	$20^{+0.084}_{0}$	$31.5^{+0.3}_{+0.1}$	61	25	52	14	13	192	M12 x 1.75	10	22	48
100	Up to 1000	40	37	116	41	92	$25^{+0.084}_{0}$	$35.5^{+0.3}_{+0.1}$	64	30	52	14	16	206	M12 x 1.75	10	26	58

Bore size (mm)	MM	N	RR	S	U	W	Without rod boot			With rod boot						
							H	Z	ZZ	d	e	f	h	ℓ	Z	ZZ
40	M14 x 1.5	27	10	130.6	16	8	51	211.6	221.6	56	43	11.2	59	1/4 stroke	219.5	229.6
50	M18 x 1.5	30	12	133.6	19	8	58	226.6	238.6	64	52	11.2	66	1/4 stroke	234.6	246.6
63	M18 x 1.5	31	16	140.6	23	8	58	238.6	254.6	64	52	11.2	66	1/4 stroke	246.6	262.6
80	M22 x 1.5	37	20	152.6	28	0	71	271.6	291.6	76	65	12.5	80	1/4 stroke	280.6	300.6
100	M26 x 1.5	40	25	159.6	36	0	72	289.6	314.6	76	65	14	81	1/4 stroke	298.6	323.6

∗ The minimum stroke of the one with rod boot is 20 mm or more.

∗ Clevis pin, flat washer and cotter pin are shipped together.

Center Trunnion Type: CVS1T

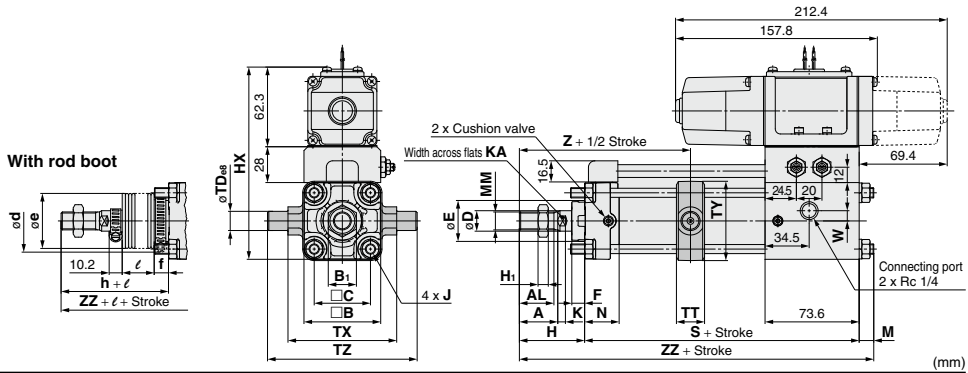

(mm)

Bore size (mm)	Stroke* range (mm)	A	AL	B	B_1	C	D	E	F	H_1	HX	J	K	KA	M	MM	N	S	TD_{e8}
40	Up to 1000	30	27	60	22	44	16	32	10	8	150	M8 x 1.25	6	14	11.4	M14 x 1.5	27	130.6	$15^{-0.032}_{-0.059}$
50	Up to 1000	35	32	70	27	52	20	40	10	11	160	M8 x 1.25	7	18	11.4	M18 x 1.5	30	133.6	$15^{-0.032}_{-0.059}$
63	Up to 1000	35	32	85	27	64	20	40	10	11	175	M10 x 1.25	7	18	13.4	M18 x 1.5	31	140.6	$18^{-0.032}_{-0.059}$
80	Up to 1000	40	37	102	32	78	25	52	14	13	192	M12 x 1.75	10	22	18.4	M22 x 1.5	37	152.6	$25^{-0.040}_{-0.073}$
100	Up to 1000	40	37	116	41	92	30	52	14	16	206	M12 x 1.75	10	26	16.4	M26 x 1.5	40	159.6	$25^{-0.040}_{-0.073}$

Bore size (mm)	TT	TX	TY	TZ	W	Without rod boot			With rod boot						
						H	Z	ZZ	d	e	f	h	ℓ	Z	ZZ
40	22	85	62	117	8	51	93	193	56	43	11.2	59	1/4 stroke	101	201
50	22	95	74	127	8	58	103	203	64	52	11.2	66	1/4 stroke	111	211
63	28	110	90	148	8	58	107	212	64	52	11.2	66	1/4 stroke	115	220
80	34	140	110	192	0	71	129	242	76	65	12.5	80	1/4 stroke	138	251
100	40	162	130	214	0	72	135	248	76	65	14	81	1/4 stroke	144	257

* The minimum stroke of the one with rod boot is 20 mm or more.

Accessory Dimensions

I Type Single Knuckle Joint

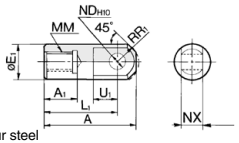

Material: Free cutting sulfur steel (mm)

Part no.	Applicable bore size (mm)	A	A_1	$øE_1$	L_1	MM	R_1	U_1	$øND_{H10}$	NX
I-04	**40**	69	22	24	55	M14 x 1.5	15.5	20	$12^{+0.070}_{0}$	$16^{-0.1}_{-0.3}$
I-05	**50, 63**	74	27	28	60	M18 x 1.5	15.5	20	$12^{+0.070}_{0}$	$16^{-0.1}_{-0.3}$
I-08	**80**	91	37	36	71	M22 x 1.5	22.5	26	$18^{+0.070}_{0}$	$28^{-0.1}_{-0.3}$
I-10	**100**	105	37	40	83	M26 x 1.5	24.5	28	$20^{+0.084}_{0}$	$30^{-0.1}_{-0.3}$

Knuckle Pin, Clevis Pin

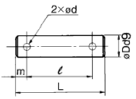

Material: Carbon steel (mm)

Part no.	Applicable bore size (mm)		øDd9	L	ℓ	m	ød (Drill through)	Applicable cotter pin
	Clevis	Knuckle						
CDP-2A	**40**	—	$10^{-0.046}_{-0.076}$	46	38	4	3	ø3 x 18ℓ
CDP-3A	**50**	**40, 50, 63**	$12^{-0.050}_{-0.093}$	55.5	47.5	4	3	ø3 x 18ℓ
CDP-4A	**63**	—	$16^{-0.050}_{-0.093}$	71	61	5	4	ø4 x 25ℓ
CDP-5A	—	**80**	$18^{-0.050}_{-0.093}$	76.5	66.5	5	4	ø4 x 25ℓ
CDP-6A	**80**	**100**	$20^{-0.065}_{-0.117}$	83	73	5	4	ø4 x 30ℓ
CDP-7A	**100**	—	$25^{-0.065}_{-0.117}$	88	78	6	4	ø4 x 36ℓ

* Cotter pin and plain washer are shipped together.

Y Type Double Knuckle Joint

* Knuckle pin, cotter pin and plain washer are shipped together.

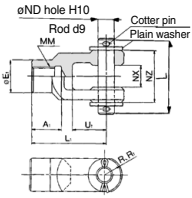

Material: Cast iron (mm)

Part no.	Applicable bore size (mm)	A_1	E_1	L_1	MM	RR_1	U_1	ND	NX	NZ	L	Cotter pin size	flat washer size
Y-04D	**40**	22	24	55	M14 x 1.5	13	25	12	$16^{+0.3}_{+0.1}$	38	55.5	ø3 x 18 L	Polished round 12
Y-05D	**50, 63**	27	28	60	M18 x 1.5	15	27	12	$16^{+0.3}_{+0.1}$	38	55.5	ø3 x 18 L	Polished round 12
Y-08D	**80**	37	36	71	M22 x 1.5	19	28	18	$28^{+0.3}_{+0.1}$	55	76.5	ø4 x 25 L	Polished round 18
Y-10D	**100**	37	40	83	M26 x 1.5	21	38	20	$30^{+0.3}_{+0.1}$	61	83	ø4 x 30 L	Polished round 20

Rod End Nut

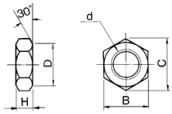

Material: Rolled steel (mm)

Part no.	Applicable bore size (mm)	d	H	B	C	D
NT-04	**40**	M14 x 1.5	8	22	25.4	21
NT-05	**50, 63**	M18 x 1.5	11	27	31.2	26
NT-08	**80**	M22 x 1.5	13	32	37	31
NT-10	**100**	M26 x 1.5	16	41	47.3	39

Auto Switch Mounting

Auto Switch Proper Mounting Position (Detection at Stroke End) and Mounting Height

<Tie-rod mounting type>

D-M9□/M9□V **D-Z7□/Z80**
D-M9□W/M9□WV **D-Y59□/Y69□/Y7P/Y7PV**
D-M9□A/M9□AV **D-Y7□W/Y7□WV**
D-A9□/A9□V

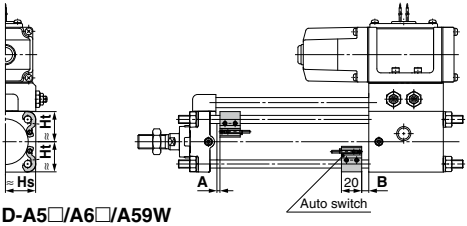

D-A5□/A6□/A59W

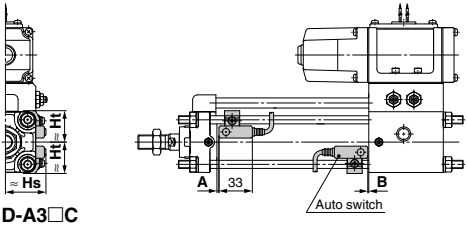

D-A3□C
D-G39C/K39C

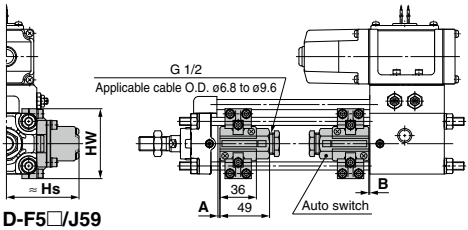

D-F5□/J59
D-F5NT
D-F5□W/J59W/F59F

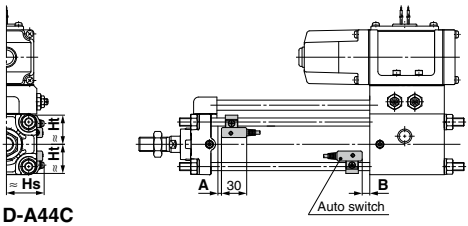

D-A44C

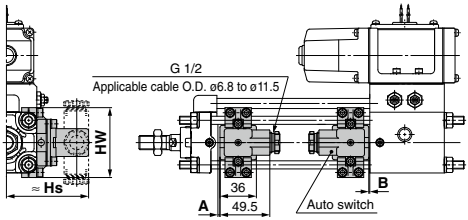

<Band mounting type>

D-B5□/B64/B59W

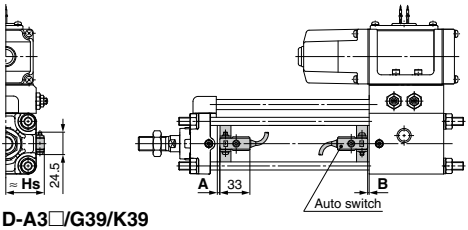

D-A3□/G39/K39

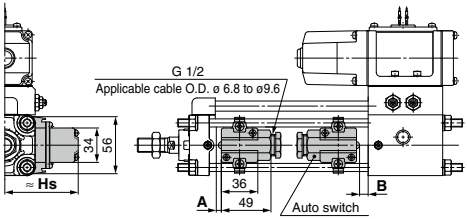

D-G5□/K59/G5□W/K59W
D-G59F/G5NT

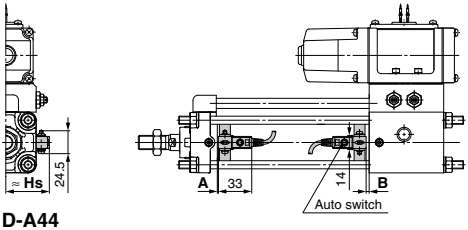

D-A44

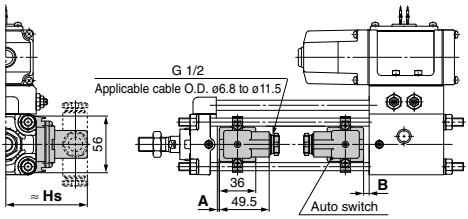

Auto Switch Proper Mounting position (Detection at Stroke End) and Mounting Height

Auto Switch Proper Mounting Position (Standard type)

(mm)

Auto switch model / Bore size	D-M9□ D-M9□V D-M9□W D-M9□WV D-M9□A D-M9□AV		D-A9□ D-A9□V		D-Y59□ D-Y69□ D-Y7P D-Y7PV D-Y7□W D-Y7□WV D-Y7BA D-Z7□ D-Z80 D-B59W		D-F5□ D-J59 D-F59F D-F5□W D-J59W D-F5BA		D-F5NT		D-A59W		D-G39 D-G39C D-K39 D-K39C D-A5□ D-A6□ D-A3□ D-A3□C D-A44 D-A44C		D-G5□ D-K59 D-G5NT D-G5□W D-K59W D-G5BA D-G59F		D-B5□ D-B64	
	A	B	A	B	A	B	A	B	A	B	A	B	A	B	A	B	A	B
40	9	9	5	5	2.5	2.5	5.5	5.5	10.5	10.5	3	3	0	0	1	1	0	0
50	9.5	8.5	5.5	4.5	3	2	6	5	11	10	3.5	2.5	0	0	1.5	0.5	0	0
63	12.5	11.5	8.5	7.5	6	5	9	8	14	13	6.5	5.5	2.5	1.5	4.5	3.5	3	2
80	16.5	13.5	12.5	9.5	10	7	13	10	18	15	10.5	7.5	6.5	3.5	8.5	5.5	7	4
100	18	16	14	12	11.5	9.5	14.5	12.5	19.5	17.5	12	10	8	6	10	8	8.5	6.5

Note 1) D-B5□ type, D-G5□ type, D-K5□ type are mountable only upon a receipt of order. (Not mountable after the time of shipment)
Note 2) Adjust the auto switch after confirming the operating conditions in the actual setting.

Auto Switch Mounting Height (Standard type)

(mm)

Auto switch model / Bore size	D-M9□ D-M9□W D-M9□A D-A9□		D-M9□V D-M9□WV D-M9□AV		D-A9□V		D-Y59□ D-Y7P D-Y7BA D-Y7□W D-Z7□ D-Z80		D-Y69□ D-Y7PV D-Y7□WV		D-G5□ D-K59 D-G5NT D-G5□W D-K59W D-G5BA D-G59F D-B5□ D-B64 D-B59W	D-G39 D-K39 D-A3□	D-A44	D-F5□ D-J59 D-F5□W D-J59W D-F5BA D-F59F D-F5NT		D-A5□ D-A6□ D-A59W		D-G39C D-K39C D-A3□C		D-A44C	
	Hs	Ht	Hs	Ht	Hs	Ht	Hs	Ht	Hs	Ht	Hs	Hs	Hs	Hs	Ht	Hs	Ht	Hs	Ht	Hs	Ht
40	30	30	34	30	31	30	30	30	30	30	37	71.5	81.5	38	31.5	38.5	31.5	73	69	81	69
50	34	34	38	34	35	34	34	34	34	34	42	76.5	86.5	42	35.5	42	35.5	78.5	77	86.5	77
63	41	41	44	41	41.5	41	41	41	41	41	49	83.5	93.5	47	43	46.5	43	85.5	91	93.5	91
80	49.5	49	52.5	49	50	49	49.5	49	49.5	49	57.5	92	102	53.5	51	53.5	51	94	107	102	107
100	56.5	56	61	56	58.5	56	56.5	55.5	57.5	55.5	68	102.5	112.5	61	57.5	61.5	57.5	104	121	112	121

Minimum Stroke for Auto Switch Mounting (Standard Type)

n: Number of auto switches (mm)

Auto switch model	Number of auto switches		Brackets other than center trunnion	Center trunnion				
				ø40	ø50	ø63	ø80	ø100
D-M9□ D-M9□W	2 (Different surfaces and same surface) 1		15	80		85	90	95
	n		$15 + 40\frac{(n-2)}{2}$ (n = 2, 4, 6, 8···) Note 1)	$80 + 40\frac{(n-4)}{2}$ (n = 4, 8, 12, 16···) Note 2)		$85 + 40\frac{(n-4)}{2}$ (n = 4, 8, 12, 16···) Note 2)	$90 + 40\frac{(n-4)}{2}$ (n = 4, 8, 12, 16···) Note 2)	$95 + 40\frac{(n-4)}{2}$ (n = 4, 8, 12, 16···) Note 2)
D-M9□V D-M9□WV	2 (Different surfaces and same surface) 1		10	55		60	65	70
	n		$10 + 30\frac{(n-2)}{2}$ (n = 2, 4, 6, 8···) Note 1)	$55 + 30\frac{(n-4)}{2}$ (n = 4, 8, 12, 16···) Note 2)		$60 + 30\frac{(n-4)}{2}$ (n = 4, 8, 12, 16···) Note 2)	$65 + 30\frac{(n-4)}{2}$ (n = 4, 8, 12, 16···) Note 2)	$70 + 30\frac{(n-4)}{2}$ (n = 4, 8, 12, 16···) Note 2)
D-M9□A	2 (Different surfaces and same surface) 1		15	80		85	95	100
	n		$15 + 40\frac{(n-2)}{2}$ (n = 2, 4, 6, 8···) Note 1)	$80 + 40\frac{(n-4)}{2}$ (n = 4, 8, 12, 16···) Note 2)		$85 + 40\frac{(n-4)}{2}$ (n = 4, 8, 12, 16···) Note 2)	$95 + 40\frac{(n-4)}{2}$ (n = 4, 8, 12, 16···) Note 2)	$100 + 40\frac{(n-4)}{2}$ (n = 4, 8, 12, 16···) Note 2)
D-M9□AV	2 (Different surfaces and same surface) 1		10	60		65	70	75
	n		$10 + 30\frac{(n-2)}{2}$ (n = 2, 4, 6, 8···) Note 1)	$60 + 30\frac{(n-4)}{2}$ (n = 4, 8, 12, 16···) Note 2)		$65 + 30\frac{(n-4)}{2}$ (n = 4, 8, 12, 16···) Note 2)	$70 + 30\frac{(n-4)}{2}$ (n = 4, 8, 12, 16···) Note 2)	$75 + 30\frac{(n-4)}{2}$ (n = 4, 8, 12, 16···) Note 2)
D-A9□	2 (Different surfaces and same surface) 1		15	75		80	85	90
	n		$15 + 40\frac{(n-2)}{2}$ (n = 2, 4, 6, 8···) Note 1)	$75 + 40\frac{(n-4)}{2}$ (n = 4, 8, 12, 16···) Note 2)		$80 + 40\frac{(n-4)}{2}$ (n = 4, 8, 12, 16···) Note 2)	$85 + 40\frac{(n-4)}{2}$ (n = 4, 8, 12, 16···) Note 2)	$90 + 40\frac{(n-4)}{2}$ (n = 4, 8, 12, 16···) Note 2)
D-A9□V	2 (Different surfaces and same surface) 1		10	50		55	60	65
	n		$10 + 30\frac{(n-2)}{2}$ (n = 2, 4, 6, 8···) Note 1)	$50 + 30\frac{(n-4)}{2}$ (n = 4, 8, 12, 16···) Note 2)		$55 + 30\frac{(n-4)}{2}$ (n = 4, 8, 12, 16···) Note 2)	$60 + 30\frac{(n-4)}{2}$ (n = 4, 8, 12, 16···) Note 2)	$65 + 30\frac{(n-4)}{2}$ (n = 4, 8, 12, 16···) Note 2)
D-F5□/J59 D-F5□W/J59W D-F5BA/F59F D-A5□/A6	2 (Different surfaces and same surface) 1		15	90		100	110	120
	n (Same surface)		$15 + 55\frac{(n-2)}{2}$ (n = 2, 4, 6, 8···) Note 1)	$90 + 55\frac{(n-4)}{2}$ (n = 4, 8, 12, 16···) Note 2)		$100 + 55\frac{(n-4)}{2}$ (n = 4, 8, 12, 16···) Note 2)	$110 + 55\frac{(n-4)}{2}$ (n = 4, 8, 12, 16···) Note 2)	$120 + 55\frac{(n-4)}{2}$ (n = 4, 8, 12, 16···) Note 2)
D-F5NT	2 (Different surfaces and same surface) 1		25	110		120	130	140
	n (Same surface)		$25 + 55\frac{(n-2)}{2}$ (n = 2, 4, 6, 8···) Note 1)	$110 + 55\frac{(n-4)}{2}$ (n = 4, 8, 12, 16···) Note 2)		$120 + 55\frac{(n-4)}{2}$ (n = 4, 8, 12, 16···) Note 2)	$130 + 55\frac{(n-4)}{2}$ (n = 4, 8, 12, 16···) Note 2)	$140 + 55\frac{(n-4)}{2}$ (n = 4, 8, 12, 16···) Note 2)
D-A59W	2 (Different surfaces and same surface) 1		20	90		100	110	120
	n (Same surface)		$20 + 55\frac{(n-2)}{2}$ (n = 2, 4, 6, 8···) Note 1)	$90 + 55\frac{(n-4)}{2}$ (n = 4, 8, 12, 16···) Note 2)		$100 + 55\frac{(n-4)}{2}$ (n = 4, 8, 12, 16···) Note 2)	$110 + 55\frac{(n-4)}{2}$ (n = 4, 8, 12, 16···) Note 2)	$120 + 55\frac{(n-4)}{2}$ (n = 4, 8, 12, 16···) Note 2)
	1		15	90		100	110	120
D-G5□/K59 D-G5□W D-K59W D-G5BA D-G59F D-G5NT D-B5□/B64	2	Different surfaces	15	90		100	110	
		Same surface	75					
	n	Different surfaces	$15 + 50\frac{(n-2)}{2}$ (n = 2, 4, 6, 8···) Note 1)	$90 + 50\frac{(n-4)}{2}$ (n = 4, 8, 12, 16···) Note 2)		$100 + 50\frac{(n-4)}{2}$ (n = 4, 8, 12, 16···) Note 2)	$110 + 50\frac{(n-4)}{2}$ (n = 4, 8, 12, 16···) Note 2)	
		Same surface	75 + 50 (n – 2) (n = 2, 3, 4···)	90 + 50 (n – 2) (n = 2, 4, 6, 8···) Note 1)		100 + 50 (n – 2) (n = 2, 4, 6, 8···) Note 1)	110 + 50 (n – 2) (n = 2, 4, 6, 8···) Note 1)	
	1		10	90		100	110	
D-B59W	2	Different surfaces	20	90		100	110	
		Same surface	75					
	n	Different surfaces	$20 + 50\frac{(n-2)}{2}$ (n = 2, 4, 6, 8···) Note 1)	$90 + 50\frac{(n-4)}{2}$ (n = 4, 8, 12, 16···) Note 2)		$100 + 50\frac{(n-4)}{2}$ (n = 4, 8, 12, 16···) Note 2)	$110 + 50\frac{(n-4)}{2}$ (n = 4, 8, 12, 16···) Note 2)	
		Same surface	75 + 50 (n – 2) (n = 2, 3, 4···)	90 + 50 (n – 2) (n = 2, 4, 6, 8···) Note 1)		100 + 50 (n – 2) (n = 2, 4, 6, 8···) Note 1)	110 + 50 (n – 2) (n = 2, 4, 6, 8···) Note 1)	
	1		15	90		100	110	

Note 1) When "n" is an odd number, an even number that is one larger than this odd number is used for the calculation.
Note 2) When "n" is an odd number, a multiple of 4 that is larger than this odd number is used for the calculation.

Minimum Stroke for Auto Switch Mounting (Standard Type)

n: Number of auto switches (mm)

Auto switch model	Number of auto switches		Brackets other than center trunnion	Center trunnion				
				ø40	ø50	ø63	ø80	ø100
D-G39 **D-K39** **D-A3□**	2	Different surfaces	35	75		80	90	
		Same surface	100	100		100	100	
	n	Different surfaces	35 + 30 (n – 2) (n = 2, 3, 4···)	75 + 30 (n – 2) (n = 2, 4, 6, 8···) Note 1)		80 + 30 (n – 2) (n = 2, 4, 6, 8···) Note 1)	90 + 30 (n – 2) (n = 2, 4, 6, 8···) Note 1)	
		Same surface	100 + 100 (n – 2) (n = 2, 3, 4···)	100 + 100 (n – 2) (n = 2, 4, 6, 8···) Note 1)				
	1		10	75		80	90	
D-A44	2	Different surfaces	35	75		80	90	
		Same surface	55					
	n	Different surfaces	35 + 30 (n – 2) (n = 2, 3, 4···)	75 + 30 (n – 2) (n = 2, 4, 6, 8···) Note 1)		80 + 30 (n – 2) (n = 2, 4, 6, 8···) Note 1)	90 + 30 (n – 2) (n = 2, 4, 6, 8···) Note 1)	
		Same surface	55 + 50 (n – 2) (n = 2, 3, 4···)	75 + 50 (n – 2) (n = 2, 4, 6, 8···) Note 1)		80 + 50 (n – 2) (n = 2, 4, 6, 8···) Note 1)	90 + 50 (n – 2) (n = 2, 4, 6, 8···) Note 1)	
	1		10	75		80	90	
D-G39C **D-K39C** **D-A3□C**	2	Different surfaces	20	75		80	90	
		Same surface	100	100		100	100	
	n	Different surfaces	20 + 35 (n – 2) (n = 2, 3, 4···)	75 + 35 (n – 2) (n = 2, 4, 6, 8···) Note 1)		80 + 35 (n – 2) (n = 2, 4, 6, 8···) Note 1)	90 + 35 (n – 2) (n = 2, 4, 6, 8···) Note 1)	
		Same surface	100 + 100 (n – 2) (n = 2, 3, 4, 5···)	100 + 100 (n – 2) (n = 2, 4, 6, 8···) Note 1)				
	1		10	75		80	90	
D-A44C	2	Different surfaces	20	75		80	90	
		Same surface	55					
	n	Different surfaces	20 + 35 (n – 2) (n = 2, 3, 4···)	75 + 35 (n – 2) (n = 2, 4, 6, 8···) Note 1)		80 + 35 (n – 2) (n = 2, 4, 6, 8···) Note 1)	90 + 35 (n – 2) (n = 2, 4, 6, 8···) Note 1)	
		Same surface	55 + 50 (n – 2) (n = 2, 3, 4···)	75 + 50 (n – 2) (n = 2, 4, 6, 8···) Note 1)		80 + 50 (n – 2) (n = 2, 4, 6, 8···) Note 1)	90 + 50 (n – 2) (n = 2, 4, 6, 8···) Note 1)	
	1		10	75		80	90	
D-Y59□/Y7P **D-Y7□W** **D-Z7□/Z80**	2 (Different surfaces and same surface) 1		15	80	85	90	95	105
	n		$15 + 40\frac{(n-2)}{2}$ (n = 2, 4, 6, 8···) Note 1)	$80 + 40\frac{(n-4)}{2}$ (n = 4, 8, 12, 16···) Note 2)	$85 + 40\frac{(n-4)}{2}$ (n = 4, 8, 12, 16···) Note 2)	$90 + 40\frac{(n-4)}{2}$ (n = 4, 8, 12, 16···) Note 2)	$95 + 40\frac{(n-4)}{2}$ (n = 4, 8, 12, 16···) Note 2)	$105 + 40\frac{(n-4)}{2}$ (n = 4, 8, 12, 16···) Note 2)
D-Y69□/Y7PV **D-Y7□WV**	2 (Different surfaces and same surface) 1		10	65		75	80	90
	n		$10 + 30\frac{(n-2)}{2}$ (n = 2, 4, 6, 8···) Note 1)	$65 + 30\frac{(n-4)}{2}$ (n = 4, 8, 12, 16···) Note 2)		$75 + 30\frac{(n-4)}{2}$ (n = 4, 8, 12, 16···) Note 2)	$80 + 30\frac{(n-4)}{2}$ (n = 4, 8, 12, 16···) Note 2)	$90 + 30\frac{(n-4)}{2}$ (n = 4, 8, 12, 16···) Note 2)
D-Y7BA	2 (Different surfaces and same surface) 1		20	95		100	105	110
	n		$20 + 45\frac{(n-2)}{2}$ (n = 2, 4, 6, 8···) Note 1)	$95 + 45\frac{(n-4)}{2}$ (n = 4, 8, 12, 16···) Note 2)		$100 + 45\frac{(n-4)}{2}$ (n = 4, 8, 12, 16···) Note 2)	$105 + 45\frac{(n-4)}{2}$ (n = 4, 8, 12, 16···) Note 2)	$110 + 45\frac{(n-4)}{2}$ (n = 4, 8, 12, 16···) Note 2)

Note 1) When "n" is an odd number, an even number that is one larger than this odd number is used for the calculation.
Note 2) When "n" is an odd number, a multiple of 4 that is larger than this odd number is used for the calculation.

Operating Range

(mm)

Auto switch model	Bore size				
	40	50	63	80	100
D-M9□/M9□V D-M9□W/M9□WV D-M9□A/M9□AV	4.5	5	5.5	5	6
D-A9□/A9□V	7	—	9	9	9
D-Z7□/Z80	8	7	9	9.5	10.5
D-A3□/A44 D-A3□C/A44C	9	10	11	11	11
D-A5□/A6□					
D-B5□/B64					
D-A59W	13	13	14	14	15
D-B59W	14	14	17	16	18
D-Y59□/Y69□ D-Y7P/Y7PV D-Y7□W/Y7□WV	8	7	5.5	6.5	6.5
D-F5□/J59 D-F5□W/J59W D-F5NT/F59F	4	4	4.5	4.5	4.5
D-G5□/K59 D-G5□W/K59W D-G5NT/G59F	5	6	6.5	6.5	7
D-G39/K39 D-G39C/K39C	9	9	10	10	11

∗ D-A9□ and D-A9□V types cannot be mounted on ø50
∗ Since this is a guideline including hysteresis, not meant to be guaranteed. (Assuming approximately ±30% dispersion.)
There may be the case it will vary substantially depending on an ambient environment.

Auto Switch Mounting Bracket Part No.

<Tie-rod mounting type>

Auto switch model	Bore size (mm)				
	40	50	63	80	100
D-M9□/M9□V D-M9□W/M9□WV D-M9□A/M9□AV D-A9□/A9□V	BA7-040	BA7-040	BA7-063	BA7-080	BA7-080
D-F5□/J59 D-F5□W/J59W D-F59F/F5NT D-A5□/A6□ D-A59W	BT-04	BT-04	BT-06	BT-08	BT-08
D-G39C/K39C D-A3□C/A44C	BA3-040	BA3-050	BA3-063	BA3-080	BA3-100
D-Y59□/Y69□ D-Y7P/Y7PV D-Y7□W/Y7□WV D-Y7BA D-Z7□/Z80	BA4-040	BA4-040	BA4-063	BA4-080	BA4-080

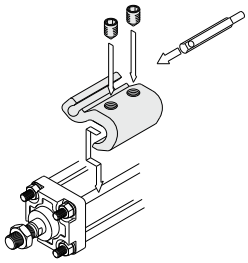

• The figure shows the mounting example for the D-M9□(V)/M9□W(V)/M9□A(V)/A9□(V) types.

<Band mounting type>

Standard

Auto switch model	Bore size (mm)				
	40	50	63	80	100
D-G39/K39 D-A3□/A44	BDS-04M	BDS-05M	BMB1-063	BMB1-080	BMB1-100
D-G5□/K59 D-G5□W/K59W D-G59F D-G5NT D-B5□/B64 D-B59W	BH2-040	BA5-050	BAF-06	BAF-08	BAF-10

Note 1) Auto switch brackets are included in the D-A3□C/A44C/G39C/K39C types. Specify the part number as follows depending on the cylinder size when ordering.
(Example) ø40: D-A3□C-4, ø50: D-A3□C-5, ø63: D-A3□C-6, ø80: D-A3□C-8, ø100: D-A3□C-10

Other than the models listed in “How to Order”, the following auto switches are applicable.
For detailed specifications, refer to pages 1341 to 1435.

Auto switch type	Model	Electrical entry (Fetching direction)	Features
Reed	D-A93V, A96V	Grommet (Perpendicular)	—
	D-A90V		Without indicator light
	D-A53, A56, B53, Z73, Z76	Grommet (In-line)	—
	D-A67, Z80		Without indicator light
Solid state	D-M9NV, M9PV, M9BV	Grommet (Perpendicular)	—
	D-Y69A, Y69B, Y7PV		
	D-M9NWV, M9PWV, M9BWV		Diagnostic indication (2-color indicator)
	D-Y7NWV, Y7PWV, Y7BWV		
	D-M9NAV, M9PAV, M9BAV		Water resistant (2-color indicator)
	D-Y59A, Y59B, Y7P	Grommet (In-line)	—
	D-F59, F5P, J59		
	D-Y7NW, Y7PW, Y7BW		Diagnostic indication (2-color indicator)
	D-F59W, F5PW, J59W		
	D-F5NT, G5NT		With timer

∗ With pre-wired connector is also available in solid state auto switches. For details, refer to pages 1410 and 1411.
∗ Normally closed (NC = b contact) solid state auto switches (D-M9□E(V)/Y7G/Y7H) are also available. For details, refer to pages 1360 and 1362.

CVS1 Series
Specific Product Precautions

Be sure to read this before handling the products. Refer to page 9 for safety instructions, pages 10 to 19 for actuator and auto switch precautions, and 3/4/5-port solenoid valve precautions on the SMC website: https://www.smcworld.com

Selection

⚠Warning

1. Confirm the specifications.
Products in this catalog are designed to be used for compressed air systems. If not operated within the designated pressure or temperature, it may damage the products or cause malfunction. (Refer to specifications.)

2. Energizing continuously for a long period of time
When the valve is continuously energized for a long period of time, the performance may deteriorate or effect peripheral equipment adversely since temperature rises when coils generate heat.

3. Mounting orientation
Metal seal: For single solenoids, mounting orientation is flexible. For double solenoids and 3 position valves, mount a spool valve horizontally.

Handling

⚠Warning

1. Do not open the cushion valve beyond the stopper.
A retaining ring is installed as a cushion valve retention mechanism. Do not open the cushion valve beyond it.
If not operated in accordance with the above precautions, the cushion valve may be ejected from the cover when air pressure is supplied.

Bore size (mm)	Width across flats	Socket wrench
40, 50	2.5	JIS 4648 Hexagonal wrench key 2.5
63, 80, 100	4	JIS 4648 Hexagonal wrench key 4

2. Use the air cushion at the end of cylinder stroke.
Otherwise, the tie-rod or piston rod assembly will be damaged.

Handling

⚠Caution

1. Do not use a pneumatic type as an air-hydro cylinder. It can cause oil leak.

2. Do not rotate the piston rod when the rod boot is fixed.
Before rotating the piston rod, loosen the band to avoid twisting the rod boot.

3. Install the rod boot with the breathing hole facing downwards or in a direction suitable to prevent dust, moisture etc. from entering easily into the rod boot.

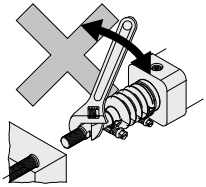

Disassembly/Replacement

⚠Caution

1. Use a socket wrench when the bracket is replaced.
If other tools are used, the nut or other parts may be deformed or the work efficiency may decrease.
For applicable sockets, refer to the table below.

Bore size (mm)	Nut	Width across flats	Socket	Tightening torque (N·m)
40, 50	DA00040 (M8 x 1.25, Hexagon nut 3 types)	13	JIS B4636 + Two-angle socket 13	7.4
63	DA00010 (M10 x 1.25, Hexagon nut 3 types)	17	JIS B4636 + Two-angle socket 17	20
80, 100	DA00131 (M12 x 1.75, Hexagon nut 3 types)	19	JIS B4636 + Two-angle socket 19	29

2. Do not replace the bushing.
As the bushing is press-fit, replace the cover assembly when the bushing must be replaced.

3. When a seal is replaced, apply grease to the new seal before it is assembled.
Operation of the cylinder without greasing will result in extreme abrasion of the seal, causing premature air leakage.

4. Do not disassemble the trunnion type cylinder because the mounting precision is required.
It is difficult to align the axial center of the trunnion with the axial center of the cylinder. Thus, if this type of cylinder is disassembled and reassembled, the required dimensional accuracy cannot be attained, which may lead to malfunctions.