Motorless Type

Electric Actuators

RoHS

Your motor and driver can be used together!
Manufacturers of compatible motors: 18 companies

Mitsubishi Electric Corporation	YASKAWA Electric Corporation
SANYO DENKI CO., LTD.	OMRON Corporation
Panasonic Corporation	FANUC CORPORATION
NIDEC SANKYO CORPORATION	KEYENCE CORPORATION
FUJI ELECTRIC CO., LTD.	MinebeaMitsumi Inc.
Shinano Kenshi Co., Ltd.	ORIENTAL MOTOR Co., Ltd.
FASTECH Co., Ltd.	Rockwell Automation, Inc. (Allen-Bradley)
Beckhoff Automation GmbH	Siemens AG
Delta Electronics, Inc.	ANCA Motion

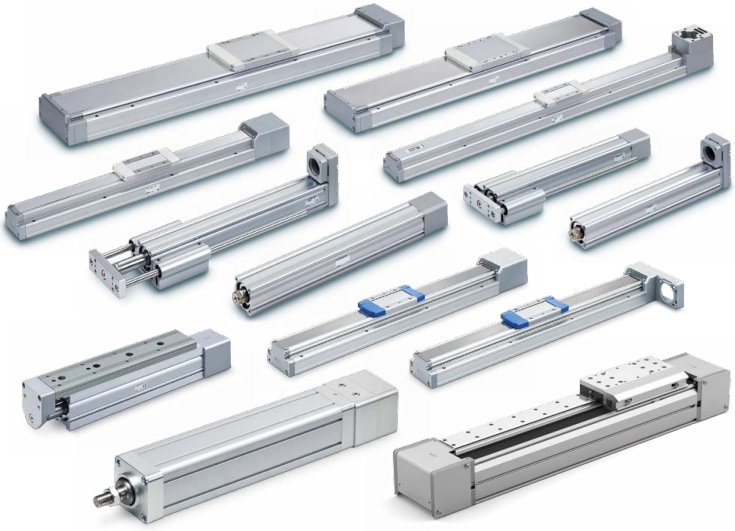

High Rigidity and High Precision Slider Type *LEKFS Series* p. 7

New A max. stroke of up to 1200 mm is now supported (size 40). Intermediate strokes are now available in 50 mm increments.

Ball Screw Drive/***LEKFS Series***

Size	Stroke
25	50 to 800
32	50 to 1000
40	150 to 1200

Slider Type *LEF Series* p. 37, 64

Ball Screw Drive/***LEFS Series***

Size	Stroke
25	50 to 800
32	50 to 1000
40	150 to 1200

Belt Drive/***LEFB Series***

Size	Stroke
25	300 to 2000
32	300 to 2500
40	300 to 3000

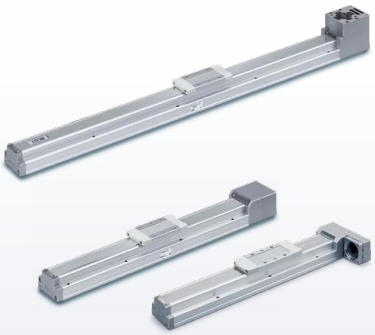

High Rigidity Slider Type *LEJ Series* p. 93

Ball Screw Drive/***LEJS Series***

Size	Stroke
40	200 to 1200
63	300 to 1500
New **100**	200 to 1500

New Large Slider Type *LET-X11 Series* p. 125

Belt Drive/***LET-X11 Series***

Size	Stroke
80	300 to 3000
100	300 to 3000

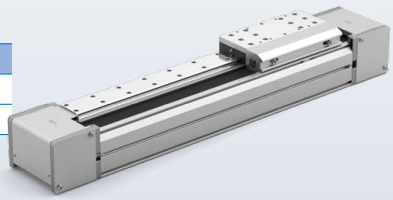

Rod Type *LEY Series* p. 147

Size	Stroke
25	30 to 400
32	30 to 500
63	50 to 800
New **100**	100 to 1000

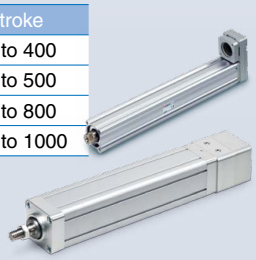

Guide Rod Type *LEYG Series* p. 169

Size	Stroke
25	30 to 300
32	

New Slide Table/High Precision Type *LESYH Series* p. 199

Size	Stroke
16	50, 100
25	50, 100, 150

LE□ Series

SMC

CAT.ES100-111E

Compatible Motors by Manufacturer (100 W/200 W/400 W/750 W equivalent)

Manufacturer	Series*1	Battery-less absolute encoder	Pulse input	CC-Link IE Field	CC-Link IE TSN	SSCNETIII/H SERVO SYSTEM CONTROLLER NETWORK
Mitsubishi Electric Corporation	MELSERVO JN		●			
	MELSERVO J4		●	●		●
	MELSERVO J5	●	●		●	
YASKAWA Electric Corporation	Σ-V		●			
	Σ-7	●	●			
	Σ-X	●	●			
SANYO DENKI CO., LTD.	SANMOTION R		●			
OMRON Corporation	OMNUC G5		●			
	OMNUC 1S	●				
Panasonic Corporation	MINAS A5/A6		●			
FANUC CORPORATION	βis(-B)		●			
NIDEC SANKYO CORPORATION	S-FLAG		●			
KEYENCE CORPORATION	SV		●			
	SV2					
FUJI ELECTRIC CO., LTD.	ALPHA7		●			
MinebeaMitsumi Inc.	Hybrid stepping motors		●			
Shinano Kenshi Co., Ltd.	CSB-BZ		●			
ORIENTAL MOTOR Co., Ltd.	αSTEP AR		●			
	αSTEP AZ	●	●			
FASTECH Co., Ltd.	Ezi-SERVO		●			
Rockwell Automation, Inc. (Allen-Bradley)	Kinetix MP/VP/TL					
Beckhoff Automation GmbH	AM 30/31/80/81					
Siemens AG	SIMOTICS S-1FK7					
Delta Electronics, Inc.	ASDA-A2		●			
ANCA Motion	AMD2000		●			

*1 Make sure that the mounting dimensions and motor specifications are appropriate. Select a motor after checking the specifications of each model.
Additionally, when considering a motor other than one of those shown above, select a motor within the range of the specifications after checking the mounting dimensions.

Series Variations

Series	Size 16	25	32	40	63	80	100	Page
High Rigidity and High Precision Slider Type Ball Screw Drive *LEKFS Series*		100 W	200 W	400 W				7
Slider Type Ball Screw Drive *LEFS Series*		100 W	200 W	400 W				37
Slider Type Belt Drive *LEFB Series*		100 W	200 W	400 W				64
High Rigidity Slider Type Ball Screw Drive *LEJS Series*				100 W	200 W		750 W	93
Large Slider Type *LET-X11 Series*						400 W	750 W	125
Rod Type *LEY Series*		100 W	200 W		400 W		750 W	147
Guide Rod Type *LEYG Series*		100 W	200 W					169
Slide Table High Precision Type *LESYH Series*	100 W	200 W						199

The values in ● show the equivalent motor capacity.

Compatible interfaces∗2

MECHATROLINK II	MECHATROLINK III	MECHATROLINK 4	DeviceNet	EtherNet/IP	EtherCAT	PROFIBUS	PROFINET	SX bus	E-SX bus
●	●		●						
●	●	●	●						
	●	●			●				
					●				
●					●				
					●				
●									
	●								
					●			●	
	●			●	●				
				●					
					●				
					●	●	●		
					●				
					●				

∗2 For details on compatible interfaces, refer to each manufacturer's catalog.

Trademark
DeviceNet® is a registered trademark of ODVA, Inc.
EtherNet/IP® is a registered trademark of ODVA, Inc.
EtherCAT® is registered trademark and patented technology, licensed by Beckhoff Automation GmbH, Germany.

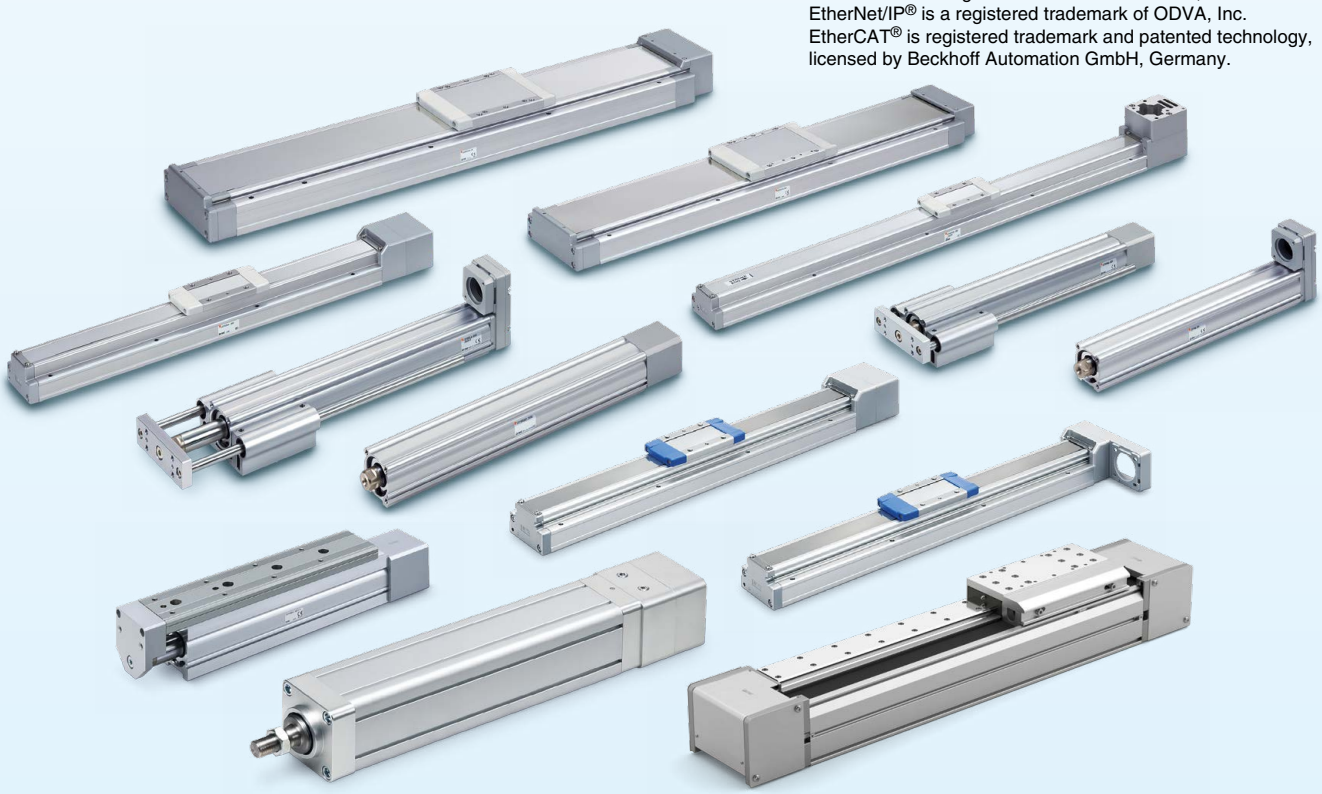

CONTENTS

Motorless Type Electric Actuators

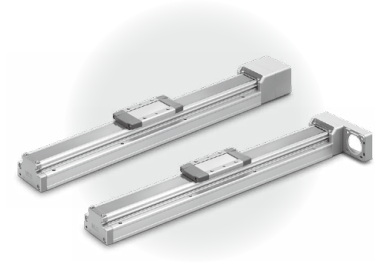

◎High Rigidity and High Precision Slider Type Ball Screw Drive *LEKFS Series*

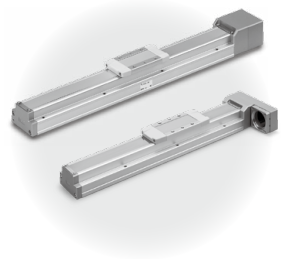

◎Slider Type Ball Screw Drive *LEFS Series*

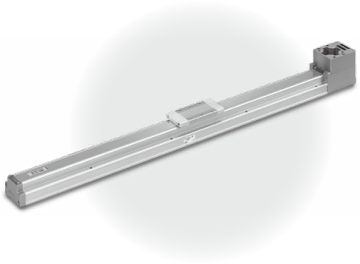

◎Slider Type Belt Drive *LEFB Series*

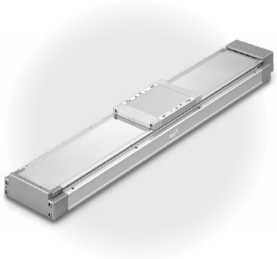

◎High Rigidity Slider Type Ball Screw Drive *LEJS Series*

◎*LEJS-M* (Built-in Intermediate Supports Type)

◎High Rigidity Slider Type Ball Screw Drive *LEJS100-X400*

CONTENTS

Motorless Type Electric Actuators

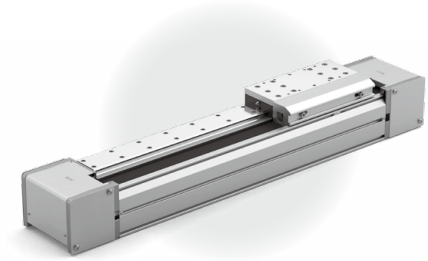

◎Large Slider Type Belt Drive *LET-X11 Series*

◎Rod Type *LEY Series* Size 25, 32, 63

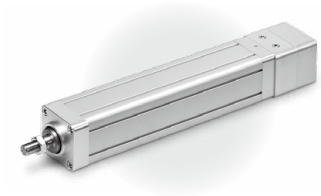

◎Rod Type *LEY Series* Size 100

◎Guide Rod Type *LEYG Series*

◎Slide Table/High Precision Type *LESYH Series*

High Rigidity and High Precision Slider Type

Ball Screw Drive *LEKFS Series*

p. 7

Model Selection

LEKFS Series ▶p. 16

Selection Procedure

Step 1 Check the work load–speed. → **Step 2** Check the cycle time. → **Step 3** Check the allowable moment.

Selection Example

The model selection method shown below corresponds to SMC's standard motor. For use in combination with a motor from a different manufacturer, check the available product information of the motor to be used.

Operating conditions

- Workpiece mass: 55 [kg]
- Speed: 300 [mm/s]
- Acceleration/Deceleration: 3000 [mm/s²]
- Stroke: 200 [mm]
- Mounting position: Horizontal upward
- Incremental encoder
- Workpiece mounting condition:

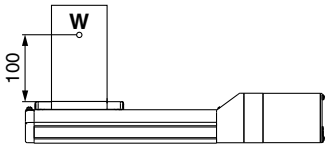

- Settling time

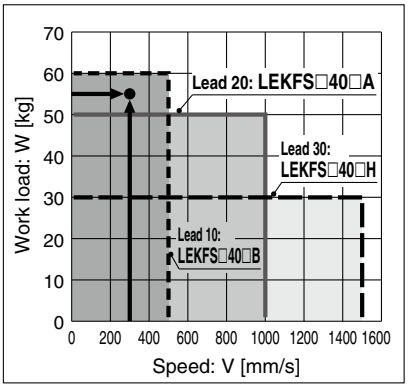

<Speed–Work Load Graph> (LEKFS40)

Step 1 Check the work load–speed. <Speed–Work Load Graph>

Select a model based on the workpiece mass and speed which are within the range of the actuator body specifications while referencing the speed–work load graph (guide) on page 8.

Selection example) The **LEKFS□40□B-200** can be temporarily selected as a possible candidate based on the graph shown on the right side.

∗ Refer to the selection method of motor manufacturers for regeneration resistance.

Step 2 Check the cycle time.

Calculate **the cycle time** using the following calculation method.

Cycle time:

T can be found from the following equation.

$$T = T1 + T2 + T3 + T4 \text{ [s]}$$

- T1: Acceleration time and T3: Deceleration time can be found by the following equation.

$$T1 = V/a1 \text{ [s]} \qquad T3 = V/a2 \text{ [s]}$$

- T2: Constant speed time can be found from the following equation.

$$T2 = \frac{L - 0.5 \cdot V \cdot (T1 + T3)}{V} \text{ [s]}$$

- T4: Settling time varies depending on the motor type and load. The value below is recommended.

$$T4 = 0.05 \text{ [s]}$$

∗ The conditions for the settling time vary depending on the motor or driver to be used.

Calculation example)
T1 to T4 can be calculated as follows.

$T1 = V/a1 = 300/3000 = 0.1$ [s],

$T3 = V/a2 = 300/3000 = 0.1$ [s]

$$T2 = \frac{L - 0.5 \cdot V \cdot (T1 + T3)}{V} = \frac{200 - 0.5 \cdot 300 \cdot (0.1 + 0.1)}{300} = 0.57 \text{ [s]}$$

$T4 = 0.05$ [s]

The cycle time can be found as follows.

$T = T1 + T2 + T3 + T4$

$= 0.1 + 0.57 + 0.1 + 0.05$

$= \mathbf{0.82}$ **[s]**

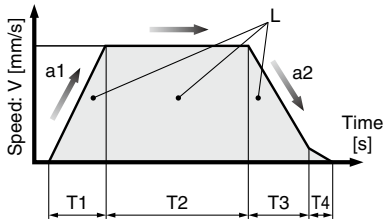

L : Stroke [mm] ··· (Operating condition)
V : Speed [mm/s] ··· (Operating condition)
a1: Acceleration [mm/s²] ··· (Operating condition)
a2: Deceleration [mm/s²] ··· (Operating condition)

T1: Acceleration time [s]
Time until reaching the set speed
T2: Constant speed time [s]
Time while the actuator is operating at a constant speed
T3: Deceleration time [s]
Time from the beginning of the constant speed operation to stop
T4: Settling time [s]
Time until positioning is completed

Step 3 Check the allowable moment. <Static allowable moment> (page 12) <Dynamic allowable moment> (page 13)

Confirm the moment that applies to the actuator is within the allowable range for both static and dynamic conditions.

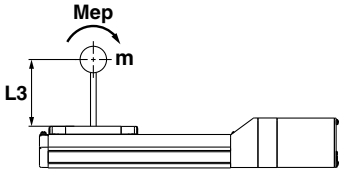

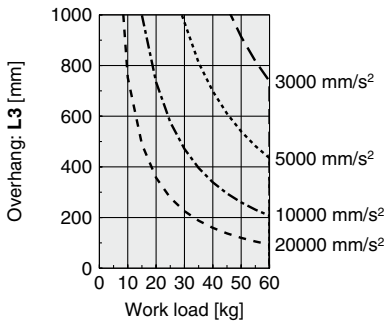

Based on the above calculation result, the LEKFS□40□B-200 should be selected.

Speed–Work Load Graph (Guide)

* The values shown below are allowable values of the actuator body. Do not use the actuator so that it exceeds these specification ranges.
* The allowable speed is restricted depending on the stroke. Select it by referring to the "Allowable Stroke Speed" below.

LEKFS□25/Ball Screw Drive

Horizontal

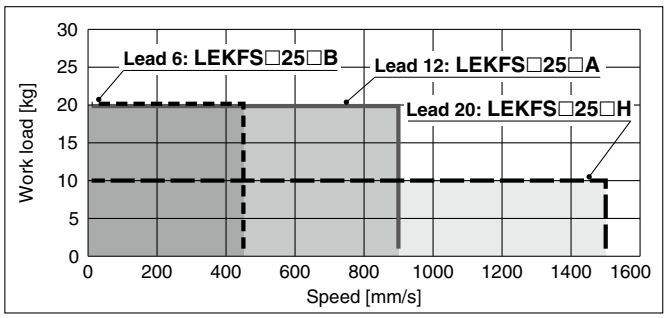

Vertical

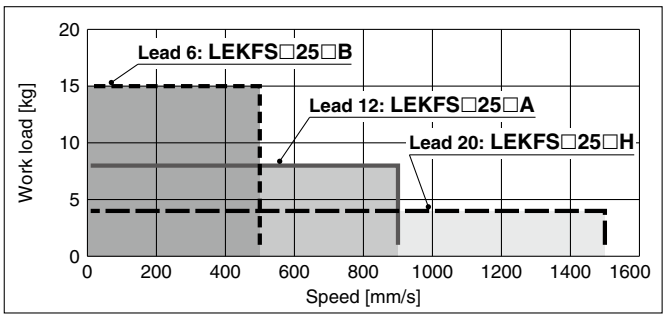

LEKFS□32/Ball Screw Drive

Horizontal

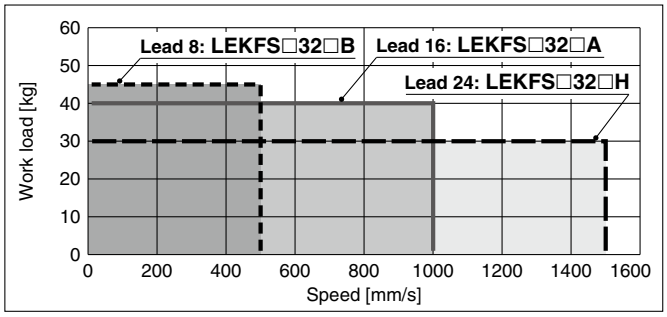

Vertical

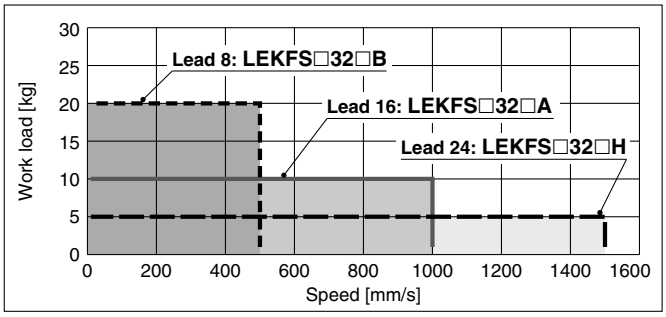

LEKFS□40/Ball Screw Drive

Horizontal

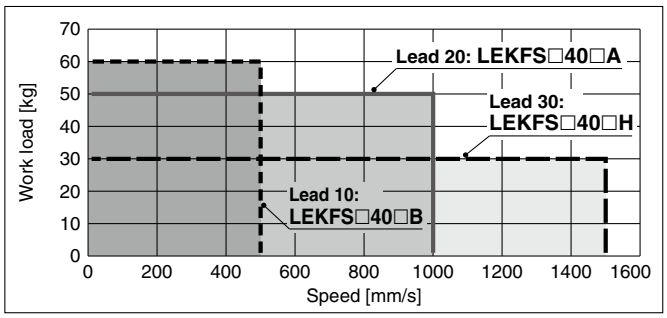

Vertical

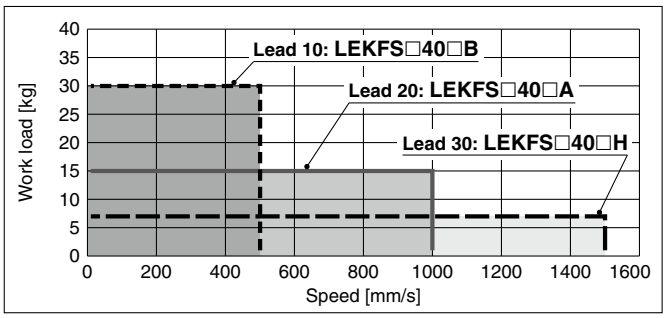

Allowable Stroke Speed

[mm/s]

Model	AC servo motor	Lead Symbol	Lead [mm]	Stroke [mm] Up to 100	Up to 200	Up to 300	Up to 400	Up to 500	Up to 600	Up to 700	Up to 800	Up to 900	Up to 1000	Up to 1100	Up to 1200
LEKFS25	100 W equivalent	H	20	1500				1200	900	700	550	—	—	—	—
		A	12	900				720	540	420	330	—	—	—	—
		B	6	450				360	270	210	160	—	—	—	—
		(Motor rotation speed)		(4500 rpm)				(3650 rpm)	(2700 rpm)	(2100 rpm)	(1650 rpm)	—	—	—	—
LEKFS32	200 W equivalent	H	24	1500					1200	930	750	610	510	—	—
		A	16	1000					800	620	500	410	340	—	—
		B	8	500					400	310	250	200	170	—	—
		(Motor rotation speed)		(3750 rpm)					(3000 rpm)	(2325 rpm)	(1875 rpm)	(1537 rpm)	(1275 rpm)	—	—
LEKFS40	400 W equivalent	H	30	—	1500					1410	1140	930	780	500	
		A	20	—	1000					940	760	620	520	440	380
		B	10	—	500					470	380	310	260	220	190
		(Motor rotation speed)		—	(3000 rpm)					(2820 rpm)	(2280 rpm)	(1860 rpm)	(1560 rpm)	(1320 rpm)	(1140 rpm)

Work Load–Acceleration/Deceleration Graph (Guide)

LEKFS□25□H/Ball Screw Drive

Horizontal

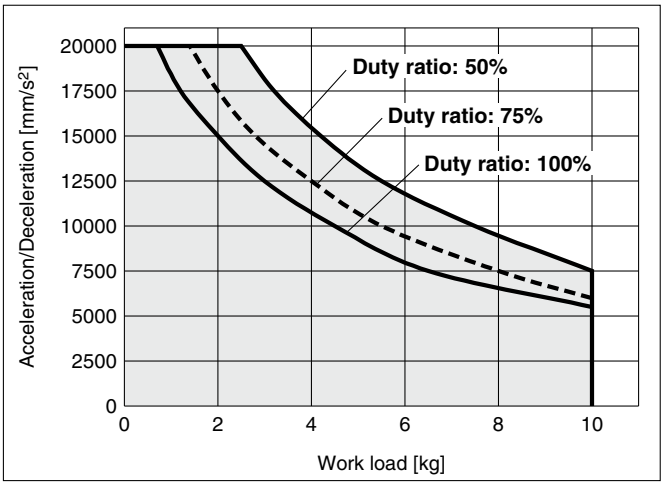

LEKFS□25□H/Ball Screw Drive

Vertical

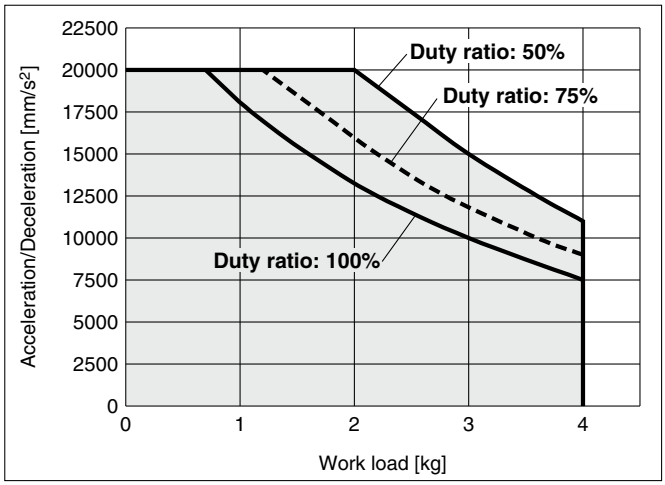

LEKFS□25□A/Ball Screw Drive

Horizontal

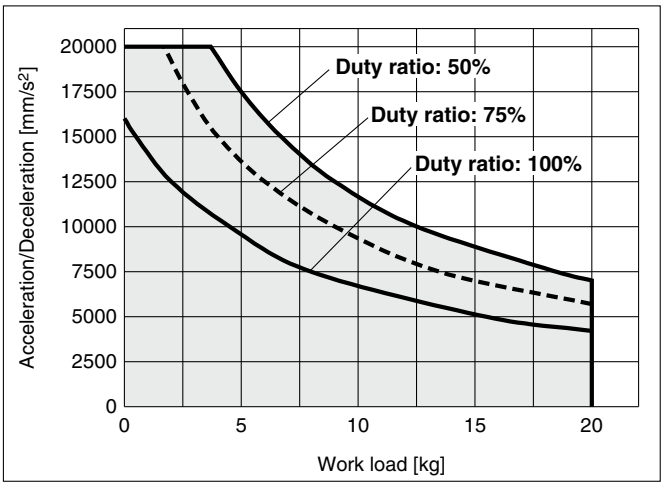

LEKFS□25□A/Ball Screw Drive

Vertical

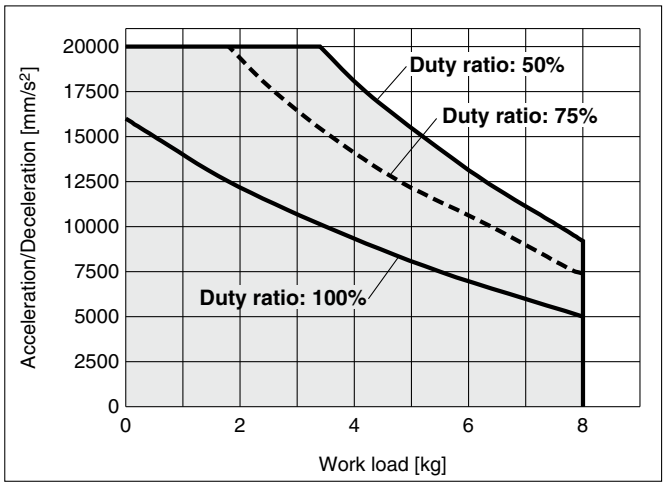

LEKFS□25□B/Ball Screw Drive

Horizontal

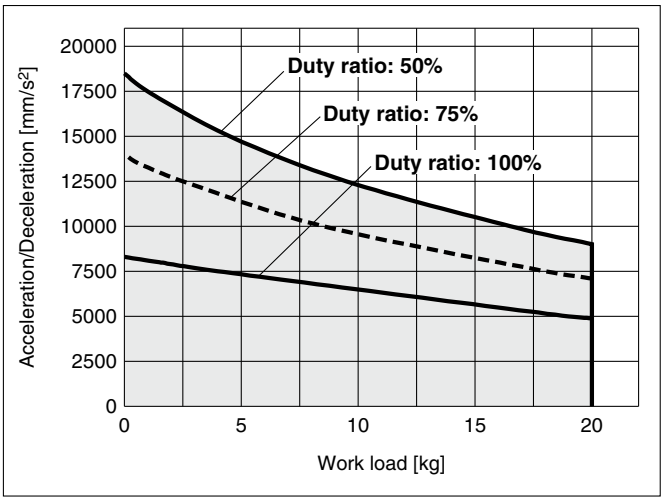

LEKFS□25□B/Ball Screw Drive

Vertical

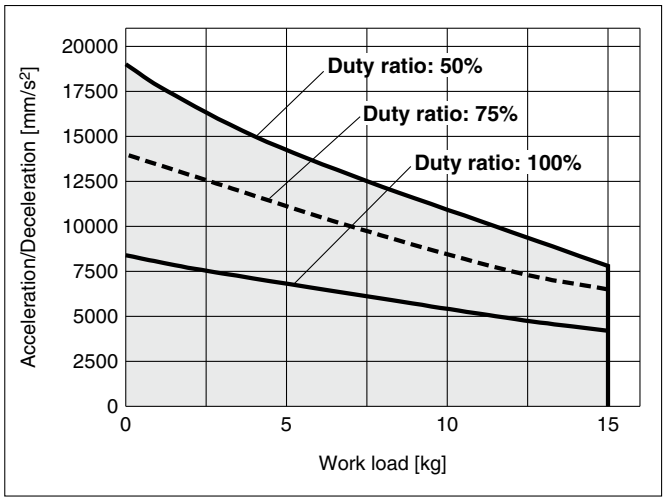

Work Load–Acceleration/Deceleration Graph (Guide)

LEKFS□32□H/Ball Screw Drive

Horizontal

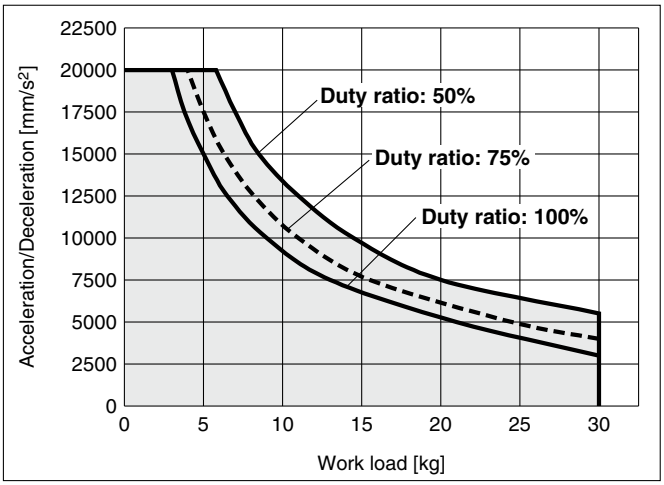

LEKFS□32□H/Ball Screw Drive

Vertical

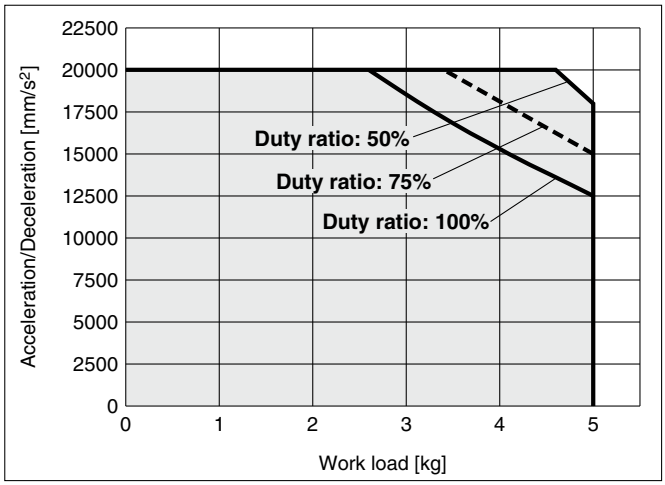

LEKFS□32□A/Ball Screw Drive

Horizontal

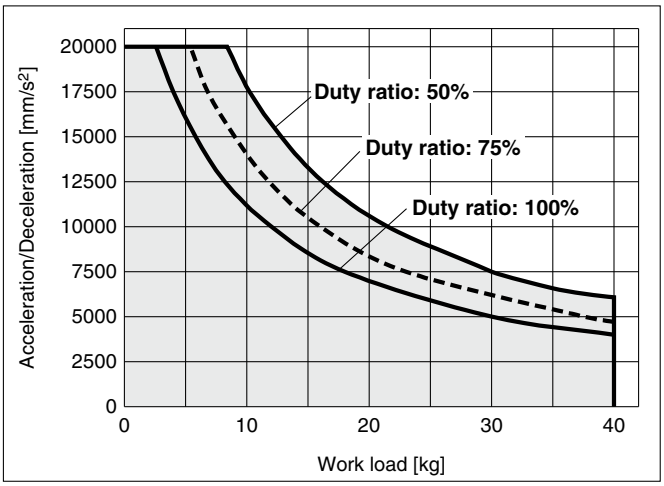

LEKFS□32□A/Ball Screw Drive

Vertical

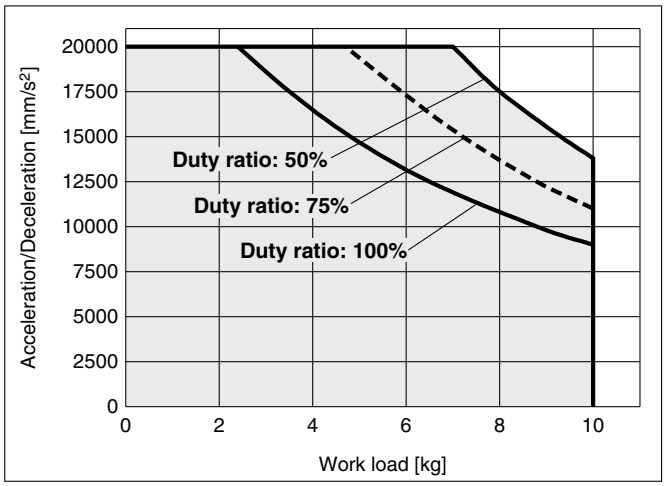

LEKFS□32□B/Ball Screw Drive

Horizontal

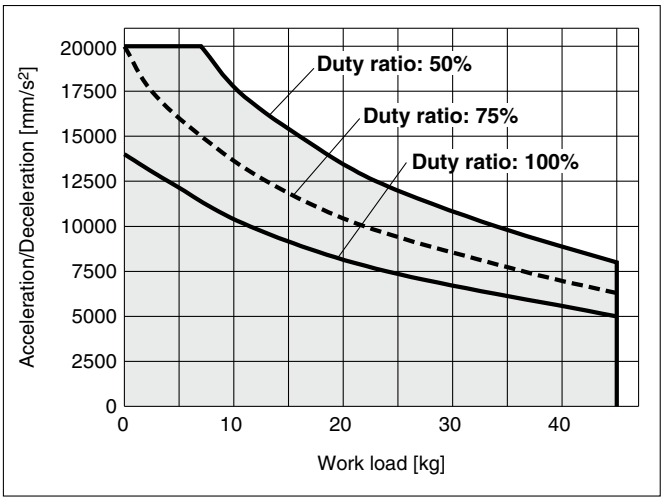

LEKFS□32□B/Ball Screw Drive

Vertical

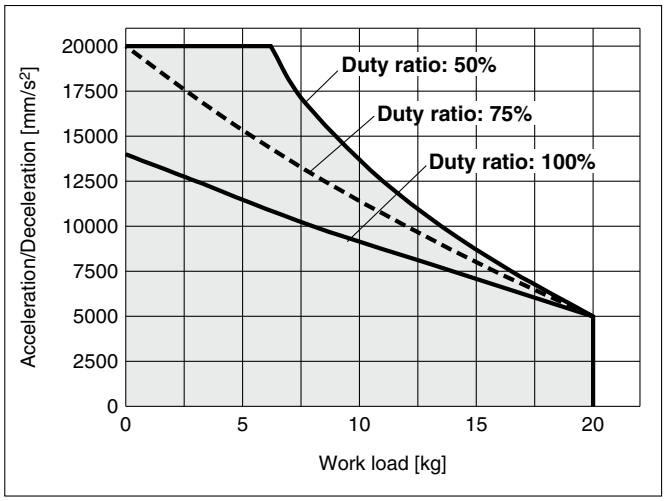

Work Load–Acceleration/Deceleration Graph (Guide)

LEKFS□40□H/Ball Screw Drive

Horizontal

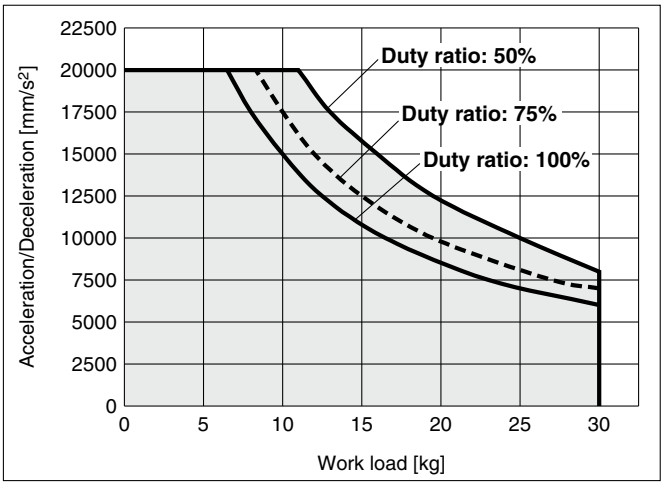

LEKFS□40□H/Ball Screw Drive

Vertical

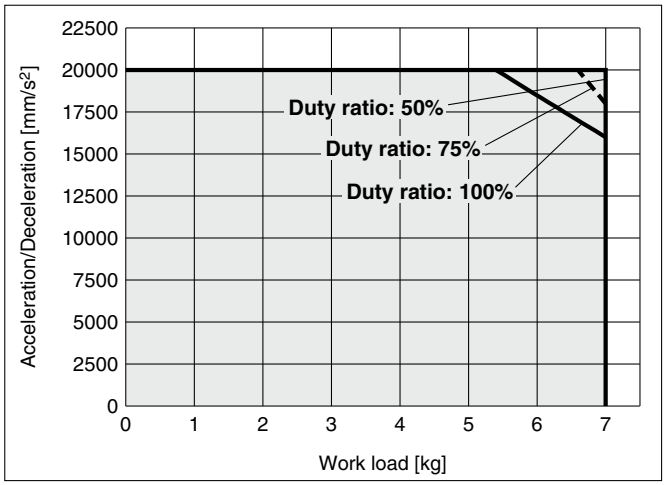

LEKFS□40□A/Ball Screw Drive

Horizontal

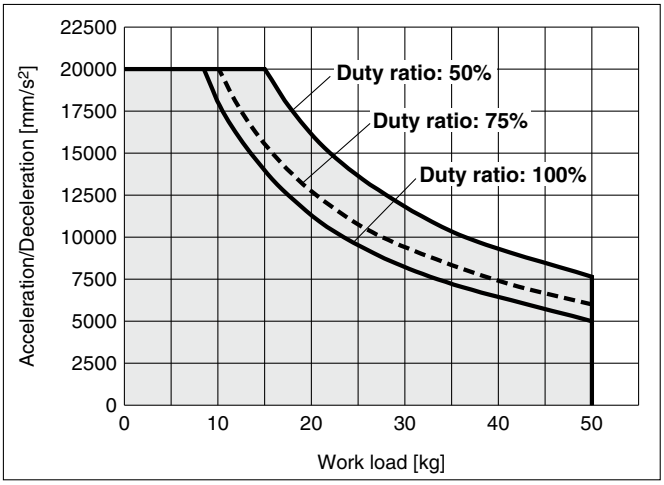

LEKFS□40□A/Ball Screw Drive

Vertical

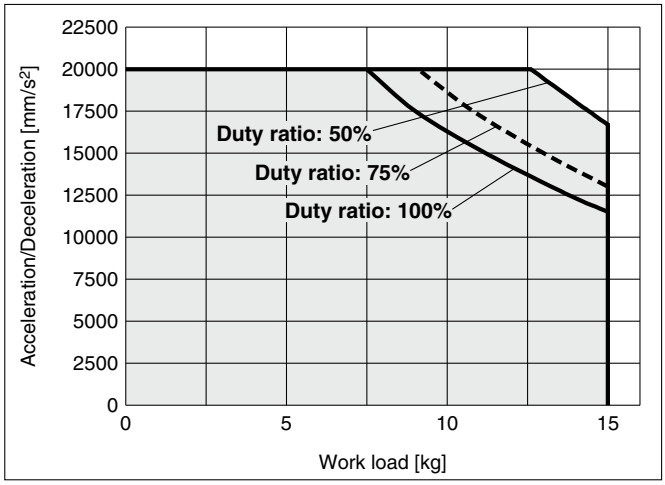

LEKFS□40□B/Ball Screw Drive

Horizontal

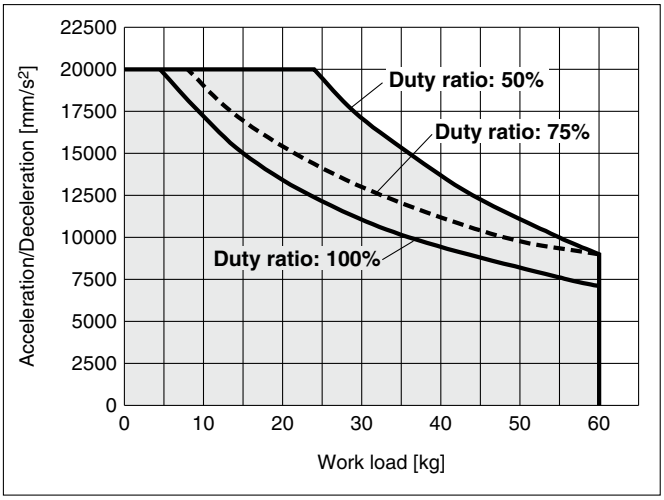

LEKFS□40□B/Ball Screw Drive

Vertical

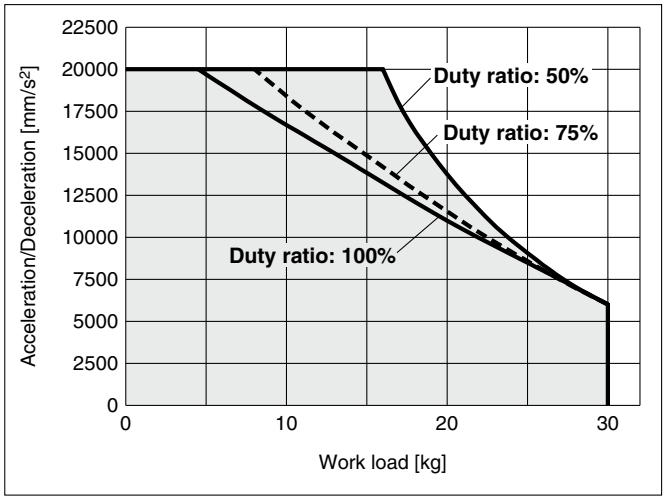

These graphs are examples of when the standard motor is mounted.
Determine the duty ratio after taking into account the load factor of the motor or driver to be used.

Static Allowable Moment*1

Model	LEKFS25	LEKFS32	LEKFS40
Pitching [N·m]	61	141	264
Yawing [N·m]	70	141	264
Rolling [N·m]	115	290	473

*1 The static allowable moment is the amount of static moment which can be applied to the actuator when it is stopped.
If the product is exposed to impact or repeated load, be sure to take adequate safety measures when using the product.

Dynamic Allowable Moment

∗ These graphs show the amount of allowable overhang (guide unit) when the center of gravity of the workpiece overhangs in one direction. When selecting the overhang, refer to the "Calculation of Guide Load Factor" or the Electric Actuator Model Selection Software for confirmation: https://www.smcworld.com

Acceleration/Deceleration —— 1000 mm/s² — — — 3000 mm/s² ····· 5000 mm/s² –·–·– 10000 mm/s² - - - - 20000 mm/s²

Orientation	Load overhanging direction **m**: Work load [kg] **Me**: Allowable moment [N·m] **L**: Overhang to the work load center of gravity [mm]		Model		
			LEKFS25□	**LEKFS32□**	**LEKFS40□**
Horizontal/Bottom	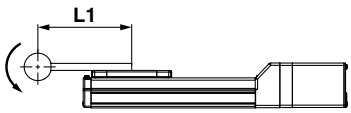	X	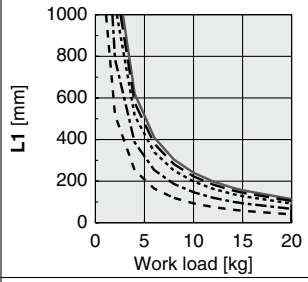	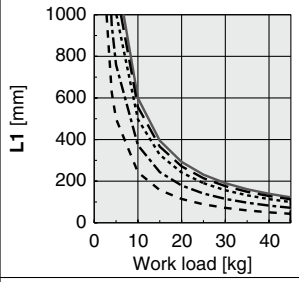	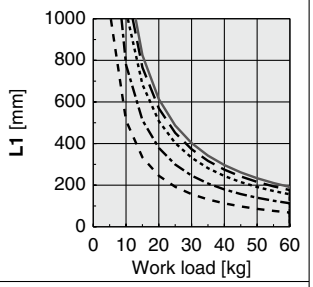
	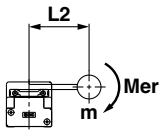	Y	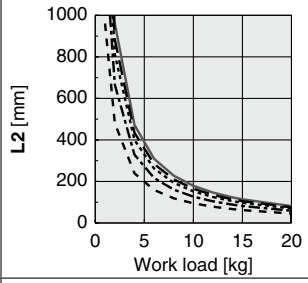	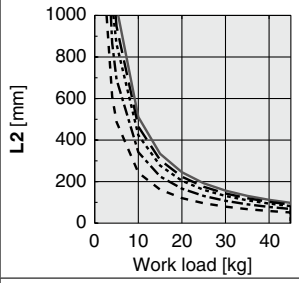	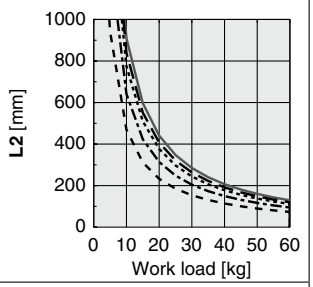
	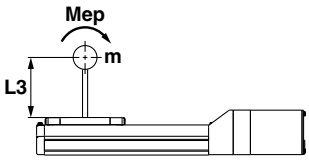 ∗ Acceleration/deceleration: Calculate the overhang for the work load at 1000 mm/s² based on the model selection software.	Z	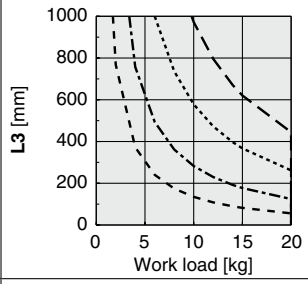	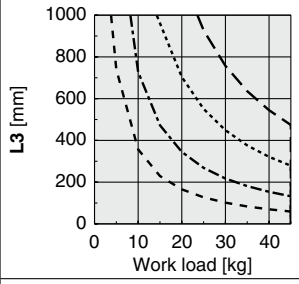	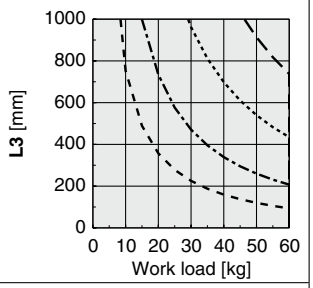
Wall	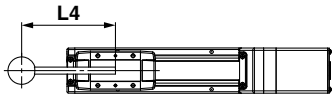	X	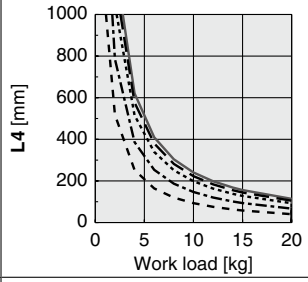	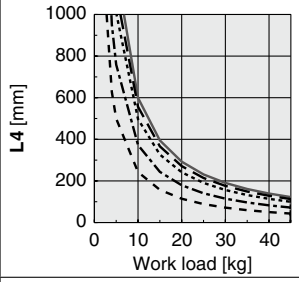	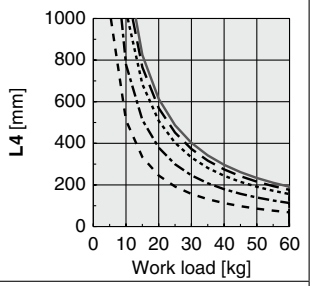
	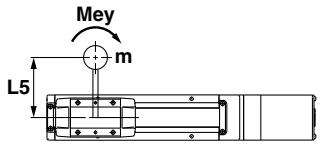 ∗ Acceleration/deceleration: Calculate the overhang for the work load at 1000 mm/s² based on the model selection software.	Y	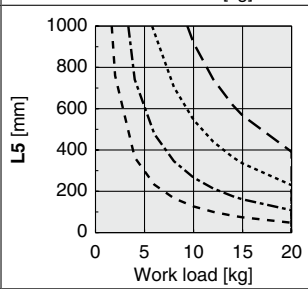	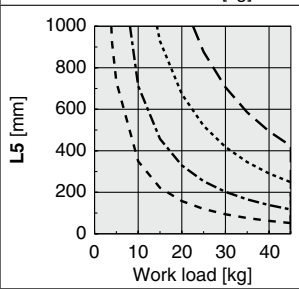	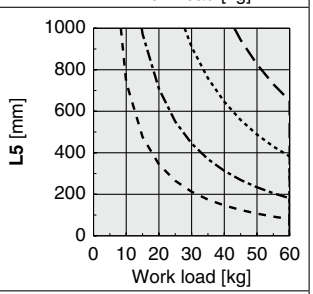
	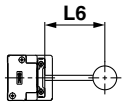	Z	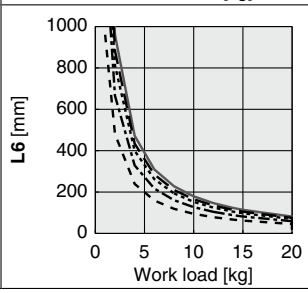	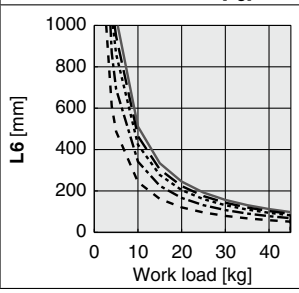	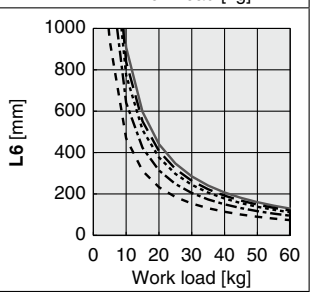

Dynamic Allowable Moment

∗ These graphs show the amount of allowable overhang (guide unit) when the center of gravity of the workpiece overhangs in one direction. When selecting the overhang, refer to the "Calculation of Guide Load Factor" or the Electric Actuator Model Selection Software for confirmation: https://www.smcworld.com

Acceleration/Deceleration ——— 1000 mm/s² — — — 3000 mm/s² ····· 5000 mm/s² –·–·– 10000 mm/s² - - - - 20000 mm/s²

Orientation	Load overhanging direction **m** : Work load [kg] **Me**: Allowable moment [N·m] **L** : Overhang to the work load center of gravity [mm]		Model		
			LEKFS25□	**LEKFS32□**	**LEKFS40□**
Vertical	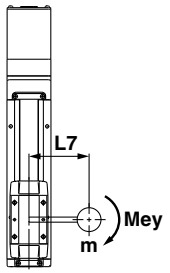	**Y**	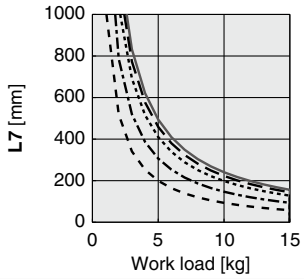	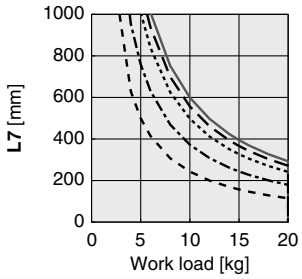	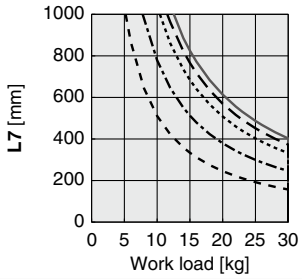
	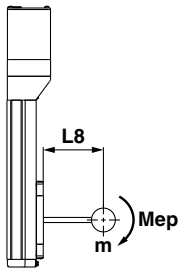	**Z**	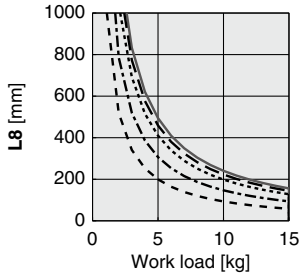	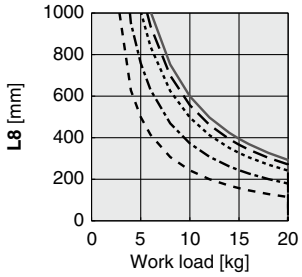	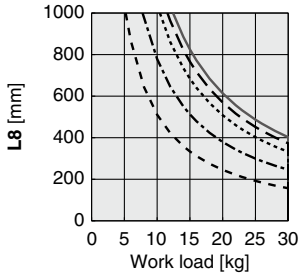

Calculation of Guide Load Factor

1. Decide operating conditions.
   Model: LEKFS
   Size: 25/32/40
   Mounting orientation: Horizontal/Bottom/Wall/Vertical
   Acceleration [mm/s²]: **a**
   Work load [kg]: **m**
   Work load center position [mm]: **Xc/Yc/Zc**
2. Select the target graph while referencing the model, size, and mounting orientation.
3. Based on the acceleration and work load, find the overhang [mm]: **Lx/Ly/Lz** from the graph.
4. Calculate the load factor for each direction.
   $\alpha x = Xc/Lx$, $\alpha y = Yc/Ly$, $\alpha z = Zc/Lz$
5. Confirm the total of αx, αy, and αz is 1 or less.
   $\alpha x + \alpha y + \alpha z \leq 1$
   When 1 is exceeded, consider a reduction of acceleration and work load, or a change of the work load center position and series.

Mounting Orientation

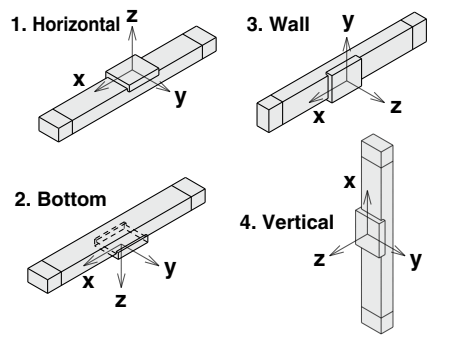

Example

1. Operating conditions
   Model: LEKFS40
   Size: 40
   Mounting orientation: Horizontal
   Acceleration [mm/s²]: 3000
   Work load [kg]: 20
   Work load center position [mm]: **Xc = 0**, **Yc = 50**, **Zc = 200**
2. Select the graphs for horizontal of the LEKFS40□ on page 13.
3. **Lx = 250 mm**, **Ly = 180 mm**, **Lz = 1000 mm**
4. The load factor for each direction can be found as follows.
   $\alpha x = 0/570 = 0$
   $\alpha y = 50/410 = 0.12$
   $\alpha z = 200/1000 = 0.2$
5. **$\alpha x + \alpha y + \alpha z = 0.32 \leq 1$**

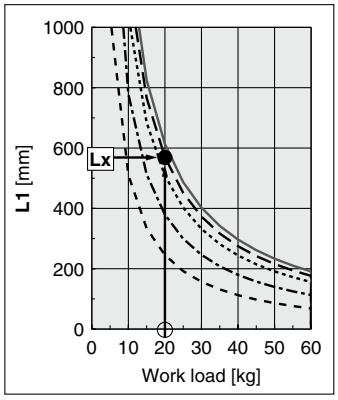

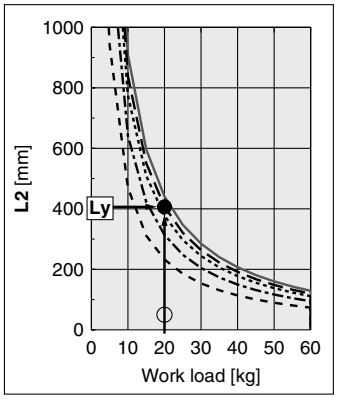

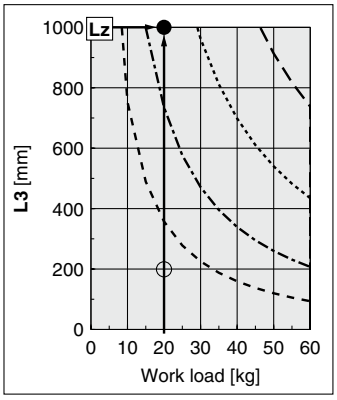

Table Accuracy (Reference Value)

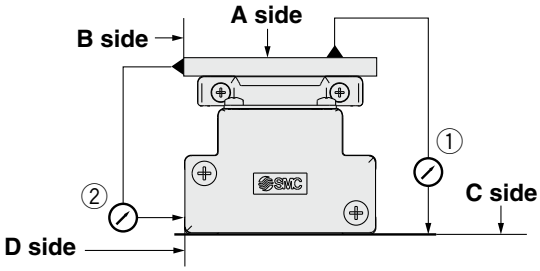

Model	Traveling parallelism [mm] (Every 300 mm)	
	① C side traveling parallelism to A side	② D side traveling parallelism to B side
LEKFS25	0.04	0.02
LEKFS32	0.04	0.02
LEKFS40	0.04	0.02

∗ Traveling parallelism does not include the mounting surface accuracy.

Table Displacement (Reference Value)

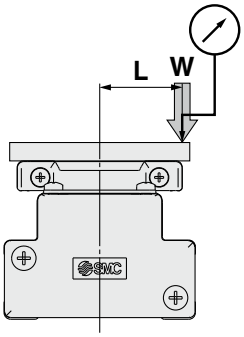

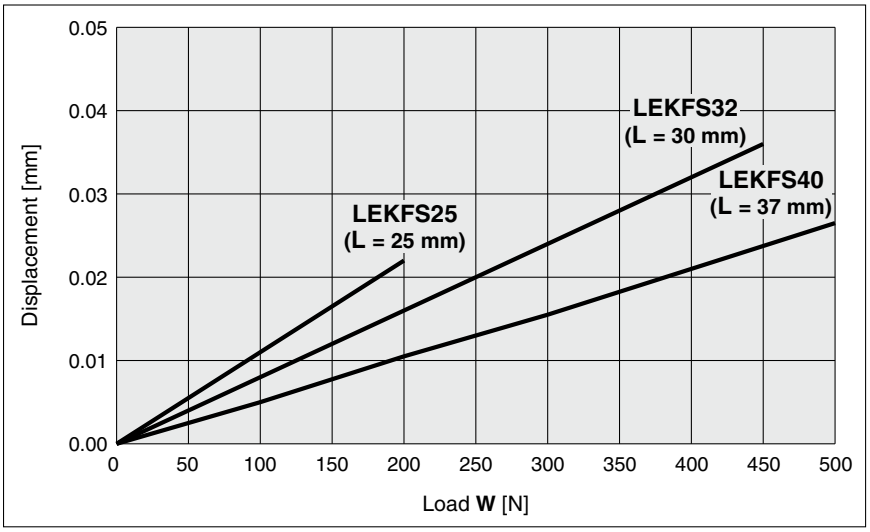

∗ This displacement is measured when a 15 mm aluminum plate is mounted and fixed on the table.

Electric Actuator/ High Rigidity and High Precision Slider Type Ball Screw Drive

LEKFS Series LEKFS25, 32, 40

RoHS

How to Order

LEKFS 32 ❑ NZ A – 300 ❑

❶ ❷ ❸ ❹ ❺ ❻

❶ Size

25
32
40

❷ Motor mounting position

Nil	In-line
R	Right side parallel
L	Left side parallel

❸ Mounting type

NZ
NY
NX
NW
NV
NU
NT
NM1
NM2
NM3

❹ Lead [mm]

Symbol	LEKFS25	LEKFS32	LEKFS40
H	20	24	30
A	12	16	20
B	6	8	10

❺ Stroke [mm]

50	50
to	to
1200	1200

∗ Refer to the applicable stroke table.

❻ Grease application (Seal band part)

Nil	With
N	Without (Roller specification)

Applicable Stroke Table

●: Standard

Size	Stroke																
	50	100	150	200	250	300	350	400	450	500	600	700	800	900	1000	1100	1200
25	●	●	●	●	●	●	●	●	●	●	●	●	●	—	—	—	—
32	●	●	●	●	●	●	●	●	●	●	●	●	●	●	●	—	—
40	—	—	●	●	●	●	●	●	●	●	●	●	●	●	●	●	●

Compatible Motors and Mounting Types∗5

Applicable motor model		Size/Mounting type														
Manufacturer	Series	25						32/40								
		NZ	NY	NX	NM1	NM2	NM3	NZ	NY	NX	NW	NV	NU	NT	NM1	NM2
Mitsubishi Electric Corporation	MELSERVO JN/J4/J5	●	—	—	—	—	—	●	—	—	—	—	—	—	—	—
YASKAWA Electric Corporation	Σ-V/7/X	●∗4	—	—	—	—	—	●	—	—	—	—	—	—	—	—
SANYO DENKI CO., LTD.	SANMOTION R	●	—	—	—	—	—	●	—	—	—	—	—	—	—	—
OMRON Corporation	OMNUC G5/1S	●	—	—	—	—	—	—	●	—	—	—	—	—	—	—
Panasonic Corporation	MINAS A5/A6	● (MHMF only)	●	—	—	—	—	—	●	—	—	—	—	—	—	—
FANUC CORPORATION	βis (-B)	●	—	—	—	—	—	● (β1 only)	—	—	●	—	—	—	—	—
NIDEC SANKYO CORPORATION	S-FLAG	●	—	—	—	—	—	●	—	—	—	—	—	—	—	—
KEYENCE CORPORATION	SV/SV2	●∗4	—	—	—	—	—	●	—	—	—	—	—	—	—	—
FUJI ELECTRIC CO., LTD.	ALPHA7	●	—	—	—	—	—	●	—	—	—	—	—	—	—	—
MinebeaMitsumi Inc.	Hybrid stepping motors	—	—	—	●∗1	—	●∗3	—	—	—	—	—	—	—	●∗2	—
Shinano Kenshi Co., Ltd.	CSB-BZ	—	—	—	●∗1	—	●∗3	—	—	—	—	—	—	—	—	—
ORIENTAL MOTOR Co., Ltd.	α STEP AR/AZ	—	—	—	—	● (46 only)	—	—	—	—	—	—	—	—	—	●∗2
FASTECH Co., Ltd.	Ezi-SERVO	—	—	—	●	—	—	—	—	—	—	—	—	—	●∗2	—
Rockwell Automation, Inc. (Allen-Bradley)	Kinetix MP/VP/TL	● (TL only)	—	—	—	—	—	—	—	●∗1 (MP/VP only)	—	—	—	● (TL only)	—	—
Beckhoff Automation GmbH	AM 30/31/80/81	●	—	—	—	—	—	—	—	●∗1 (80/81 only)	—	●∗1 (30 only)	●∗2 (31 only)	—	—	—
Siemens AG	SIMOTICS S-1FK7	—	—	●	—	—	—	—	—	●∗1	—	—	—	—	—	—
Delta Electronics, Inc.	ASDA-A2	●	—	—	—	—	—	●	—	—	—	—	—	—	—	—
ANCA Motion	AMD2000	●	—	—	—	—	—	●	—	—	—	—	—	—	—	—

∗1 Motor mounting position: In-line only ∗2 Only size 32 is available when the motor mounting position is right (or left) side parallel. ∗3 Motor mounting position: Right (or left) side parallel only
∗4 For some motors, the connector may protrude from the motor body. Be sure to check for interference with the mounting surface before selecting a motor.
∗5 The compatible motors and mounting types are typical examples. Select the mounting type after referring to the "Motor Mounting, Applicable Motor Dimensions" tables on the following "Dimensions" pages.

Specifications

Model			LEKFS25			LEKFS32			LEKFS40		
Actuator specifications	Stroke [mm]*1		50 to 800			50 to 1000			150 to 1200		
	Work load [kg]	Horizontal	10	20	20	30	40	45	30	50	60
		Vertical	4	8	15	5	10	20	7	15	30
	Speed [mm/s]	Stroke range: Up to 400	1500	900	450	1500	1000	500	1500	1000	500
		401 to 500	1200	720	360	1500	1000	500	1500	1000	500
		501 to 600	900	540	270	1200	800	400	1500	1000	500
		601 to 700	700	420	210	930	620	310	1410	940	470
		701 to 800	550	330	160	750	500	250	1140	760	380
		801 to 900	—	—	—	610	410	200	930	620	310
		901 to 1000	—	—	—	510	340	170	780	520	260
		1001 to 1100	—	—	—	—	—	—	500	440	220
		1101 to 1200	—	—	—	—	—	—	500	380	190
	Pushing return to origin speed [mm/s]		30 or less								
	Positioning repeatability [mm]		±0.01								
	Lost motion*2 [mm]		0.05 or less								
	Ball screw specifications	Thread size [mm]	ø10			ø12			ø15		
		Lead [mm]	20	12	6	24	16	8	30	20	10
		Shaft length [mm]	Stroke + 150			Stroke + 185			Stroke + 235		
	Max. acceleration/deceleration [mm/s²]		20000*3								
	Impact/Vibration resistance [m/s²]*4		50/20								
	Actuation type		Ball screw (LEKFS□), Ball screw + Belt (LEKFS□R/L)								
	Guide type		Linear guide								
	Operating temperature range [°C]		5 to 40								
	Operating humidity range [%RH]		90 or less (No condensation)								
	Enclosure		IP30 (Excludes motor mounting part)								
Other specifications	Actuation unit weight [kg]		0.2			0.3			0.55		
	Other inertia [kg·cm²]		0.02 (LEFS25) 0.02 (LEFS25R/L)			0.08 (LEFS32) 0.06 (LEFS32R/L)			0.08 (LEFS40) 0.17 (LEFS40R/L)		
	Friction coefficient		0.05								
	Mechanical efficiency		0.8								
Reference motor specifications	Motor shape		□40			□60					
	Motor type		AC servo motor (100 V/200 V)								
	Rated output capacity [W]		100			200			400		
	Rated torque [N·m]		0.32			0.64			1.3		

*1 Please contact SMC for non-standard strokes as they are produced as special orders.
*2 A reference value for correcting errors in reciprocal operation
*3 Maximum acceleration/deceleration changes according to the work load.
Refer to the "Work Load–Acceleration/Deceleration Graph (Guide)" for ball screw drive on pages 9 to 11.
*4 Impact resistance: No malfunction occurred when the actuator was tested with a drop tester in both an axial direction and a perpendicular direction to the lead screw. (The test was performed with the actuator in the initial state.)
Vibration resistance: No malfunction occurred in a test ranging between 45 to 2000 Hz. The test was performed in both an axial direction and a perpendicular direction to the lead screw. (The test was performed with the actuator in the initial state.)
* Do not allow collisions at either end of the table traveling distance at a speed exceeding "pushing return to origin speed."
Additionally, when running the positioning operation, do not set within 2 mm of both ends.
* Each value is only to be used as a guide to select a motor of the appropriate capacity.
* For other specifications, refer to the specifications of the motor that is to be installed.

Weight

Model	LEKFS25												
Stroke [mm]	50	100	150	200	250	300	350	400	450	500	600	700	800
Product weight [kg]	1.6	1.7	1.9	2.0	2.2	2.3	2.4	2.5	2.7	2.8	3.1	3.4	3.7

Model	LEKFS32														
Stroke [mm]	50	100	150	200	250	300	350	400	450	500	600	700	800	900	1000
Product weight [kg]	2.5	2.7	2.9	3.1	3.35	3.6	3.8	4.0	4.2	4.4	4.8	5.2	5.6	6.0	6.4

Model	LEKFS40														
Stroke [mm]	150	200	250	300	350	400	450	500	600	700	800	900	1000	1100	1200
Product weight [kg]	4.7	5.0	5.3	5.6	5.9	6.2	6.5	6.8	7.4	8.0	8.6	9.2	9.8	10.4	11.0

Refer to the "Motor Mounting" on page 24 for details about motor mounting and included parts.

Dimensions: Ball Screw Drive

LEKFS25

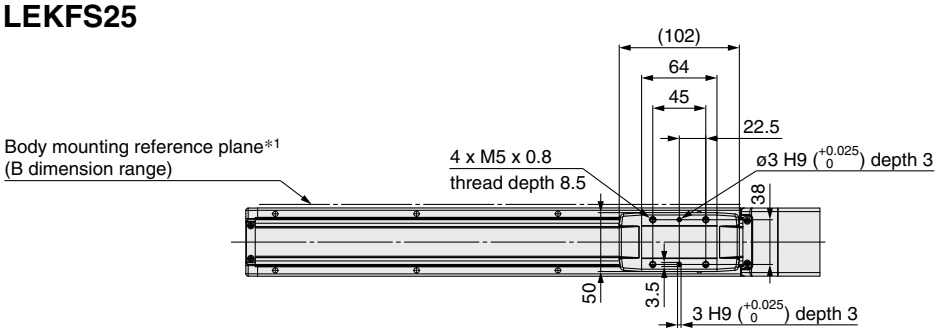

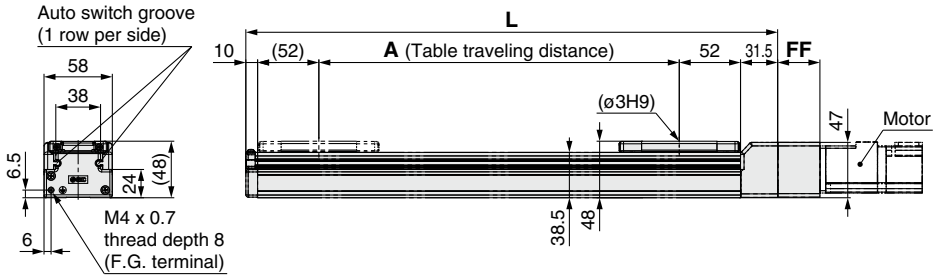

Mounting type: NZ/NY/NX

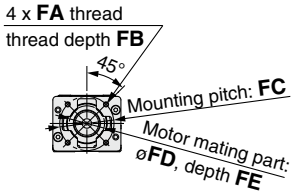

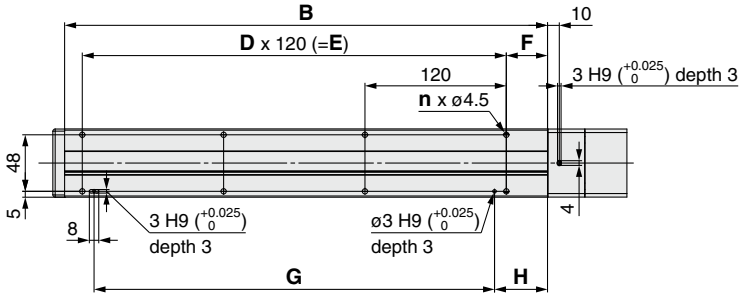

Mounting type: NM1/NM2

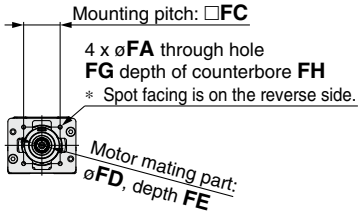

Applicable motor dimensions

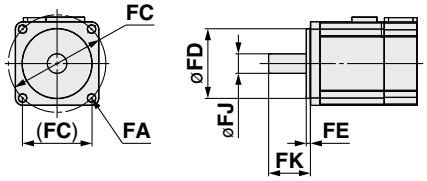

*1 When mounting the actuator using the body mounting reference plane, set the height of the opposite surface or pin to be 3 mm or more. (Recommended height: 5 mm)

Dimensions [mm]

Stroke	L	A	B	n	D	E	F	G	H
50	201.5	56	160	4	—	—	20	100	30
100	251.5	106	210				35		45
150	301.5	156	260						
200	351.5	206	310	6	2	240		220	
250	401.5	256	360						
300	451.5	306	410	8	3	360		340	
350	501.5	356	460						
400	551.5	406	510						
450	601.5	456	560	10	4	480		460	
500	651.5	506	610						
600	751.5	606	710	12	5	600		580	
700	851.5	706	810	14	6	720		700	
800	951.5	806	910	16	7	840		820	

Motor Mounting, Applicable Motor Dimensions [mm]

Mounting type	FA		FB	FC	FD	FE (Max.)	FF	FG	FH	FJ	FK
	Mounting type	Applicable motor									
NZ	M4 x 0.7	ø4.5	8	ø46	30	3.5	35.5	—	—	8	25 ±1
NY	M3 x 0.5	ø3.4	8	ø45	30	3.5	35.5	—	—	8	25 ±1
NX	M4 x 0.7	ø4.5	8	ø46	30	3.5	35.5	—	—	8	18 ±1
NM1	ø3.4	M3	—	□31	22*1	2.5*1	24	6.5	13.5	5*2	18 to 25
NM2	ø3.4	M3	—	□31	22*1	2.5*1	33.1	6.5	22.6	6	20 ±1

*1 Dimensions after mounting a ring spacer (Refer to page 24.)
*2 Shaft type: D-cut shaft

Refer to the "Motor Mounting" on page 24 for details about motor mounting and included parts.

Dimensions: Ball Screw Drive

LEKFS32

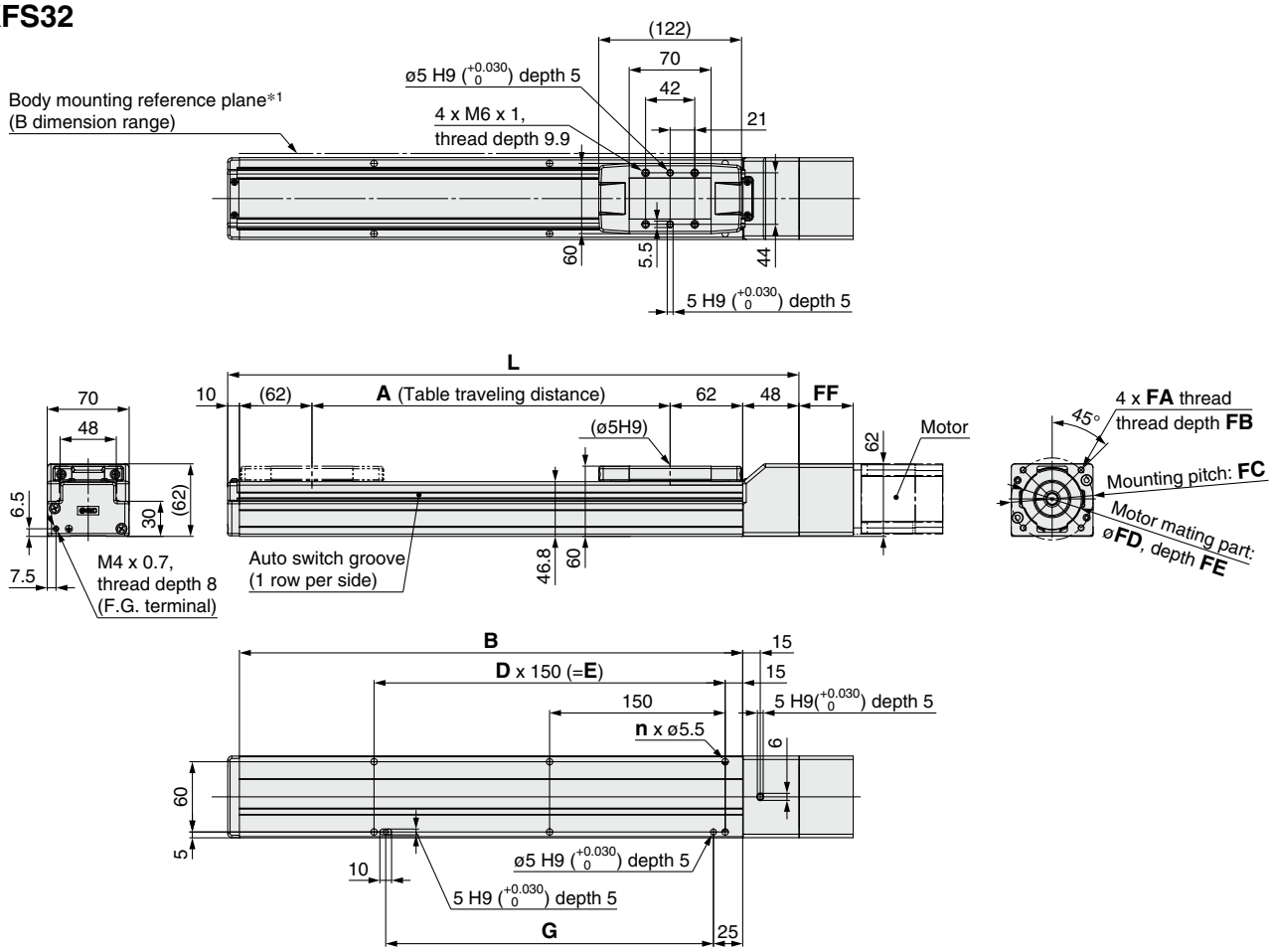

Applicable motor dimensions

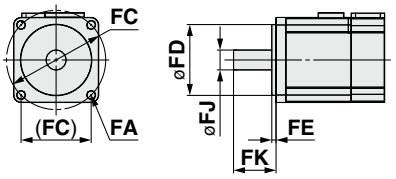

*1 When mounting the actuator using the body mounting reference plane, set the height of the opposite surface or pin to be 3 mm or more. (Recommended height: 5 mm)

Dimensions [mm]

Stroke	L	A	B	n	D	E	G
50	238	56	180	4	—	—	130
100	288	106	230				
150	338	156	280				
200	388	206	330	6	2	300	280
250	438	256	380				
300	488	306	430				
350	538	356	480	8	3	450	430
400	588	406	530				
450	638	456	580				
500	688	506	630	10	4	600	580
600	788	606	730				
700	888	706	830	12	5	750	730
800	988	806	930	14	6	900	880
900	1088	906	1030				
1000	1188	1006	1130	16	7	1050	1030

Motor Mounting, Applicable Motor Dimensions [mm]

Mounting type	FA		FB	FC	FD	FE (Max.)	FF	FJ	FK
	Mounting type	Applicable motor							
NZ	M5 x 0.8	ø5.8	9	ø70	50	5	46	14	30 ±1
NY	M4 x 0.7	ø4.5	8	ø70	50	5	46	11	30 ±1
NX	M5 x 0.8	ø5.8	9	ø63	40*1	4.5*1	49.7	9	20 ±1
NW	M5 x 0.8	ø5.8	9	ø70	50	5	47.5	9	25 ±1
NV	M4 x 0.7	ø4.5	8	ø63	40*1	4.5*1	49.7	9	20 ±1
NU	M5 x 0.8	ø5.8	9	ø70	50	5	47.5	11	23 ±1
NT	M5 x 0.8	ø5.8	9	ø70	50	5	46	12	30 ±1
NM1	M4 x 0.7	ø4.5	8	□47.14	38.1*1	4.5*1	21	6.35*2	20 ±1
NM2	M4 x 0.7	ø4.5	8	□50	36*1	4.5*1	40.1	10	24 ±1

*1 Dimensions after mounting a ring spacer (Refer to page 24.)
*2 Shaft type: D-cut shaft

Refer to the "Motor Mounting" on page 24 for details about motor mounting and included parts.

Dimensions: Ball Screw Drive

LEKFS40

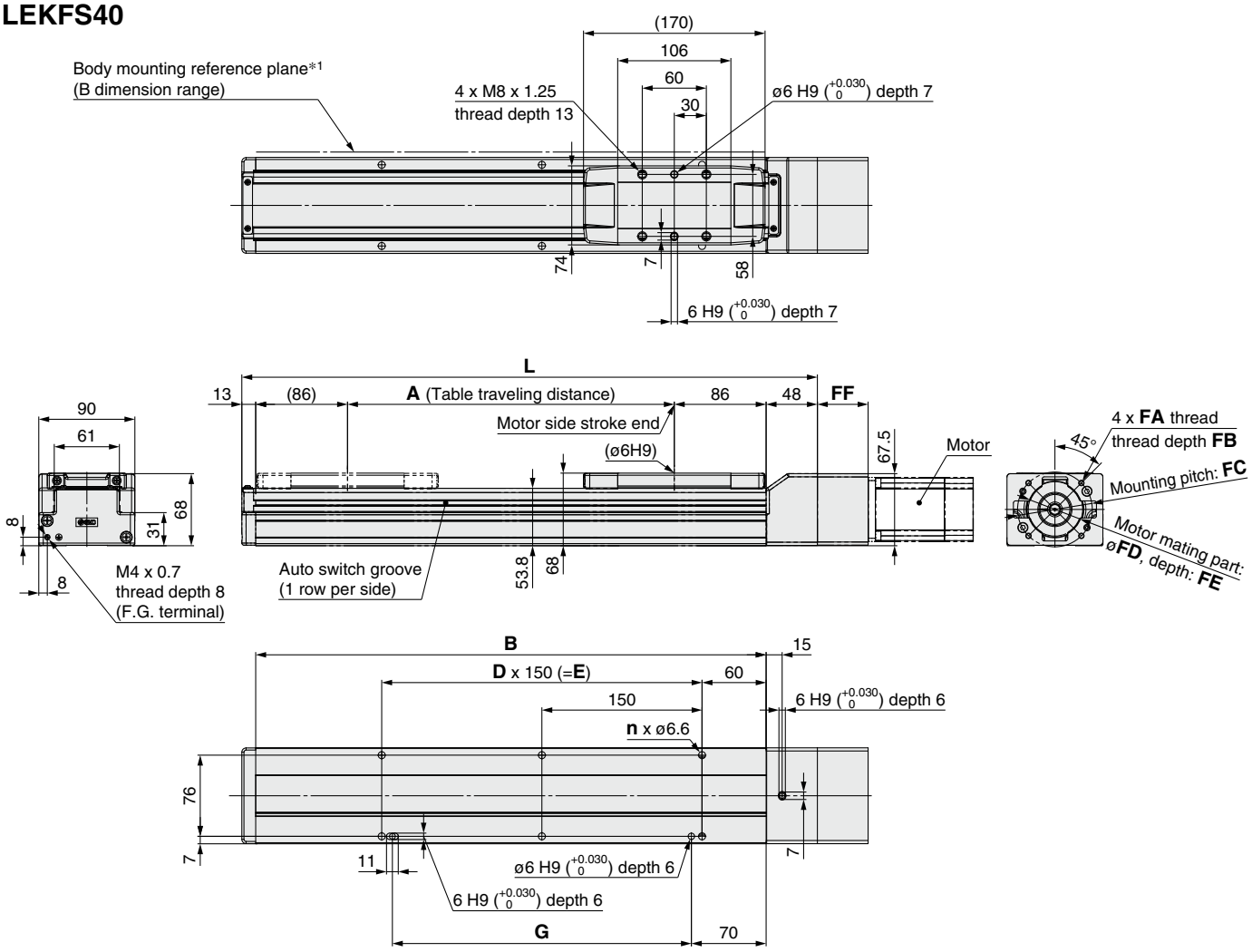

Applicable motor dimensions

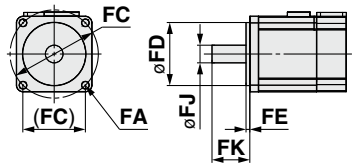

*1 When mounting the actuator using the body mounting reference plane, set the height of the opposite surface or pin to be 3 mm or more. (Recommended height: 5 mm)

Dimensions [mm]

Stroke	L	A	B	n	D	E	G
150	389	156	328	4	—	150	130
200	439	206	378	6	2	300	280
250	489	256	428				
300	539	306	478				
350	589	356	528	8	3	450	430
400	639	406	578				
450	689	456	628				
500	739	506	678	10	4	600	580
600	839	606	778				
700	939	706	878	12	5	750	730
800	1039	806	978	14	6	900	880
900	1139	906	1078				
1000	1239	1006	1178	16	7	1050	1030
1100	1339	1106	1278	18	8	1200	1180
1200	1439	1206	1378				

Motor Mounting, Applicable Motor Dimensions [mm]

Mounting type	FA		FB	FC	FD	FE (Max.)	FF	FJ	FK
	Mounting type	Applicable motor							
NZ	M5 x 0.8	ø5.8	9	ø70	50	5	47.5	14	30 ±1
NY	M4 x 0.7	ø4.5	8	ø70	50	5	47.5	14	30 ±1
NX	M5 x 0.8	ø5.8	9	ø63	40*1	4.5*1	51	9	20 ±1
NW	M5 x 0.8	ø5.8	9	ø70	50	5	48.8	9	25 ±1
NV	M4 x 0.7	ø4.5	8	ø63	40*1	4.5*1	51	9	20 ±1
NU	M5 x 0.8	ø5.8	9	ø70	50	5	48.8	11	23 ±1
NT	M5 x 0.8	ø5.8	9	ø70	50	5	47.5	12	30 ±1
NM1	M4 x 0.7	ø4.5	8	□47.14	38.1*1	4.5*1	22	6.35*2	20 ±1
NM2	M4 x 0.7	ø4.5	8	□50	36*1	4.5*1	41.4	10	24 ±1

*1 Dimensions after mounting a ring spacer (Refer to page 24.)
*2 Shaft type: D-cut shaft

Dimensions: Ball Screw Drive

Refer to the "Motor Mounting" on page 25 for details about motor mounting and included parts.

LEKFS25(L/R)

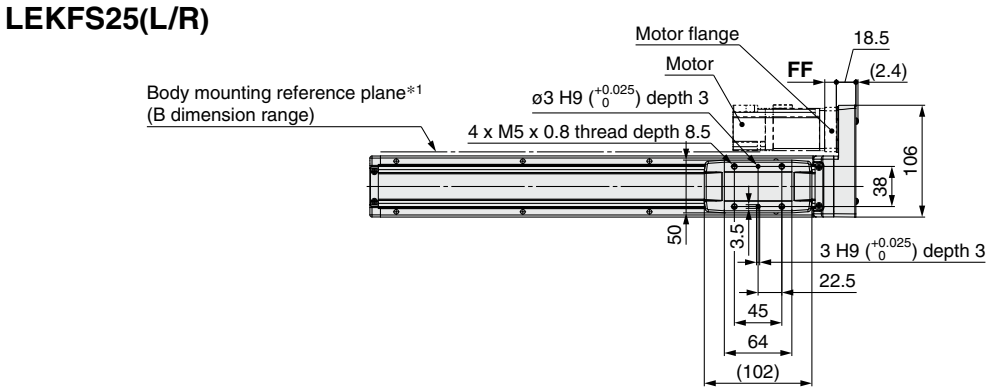

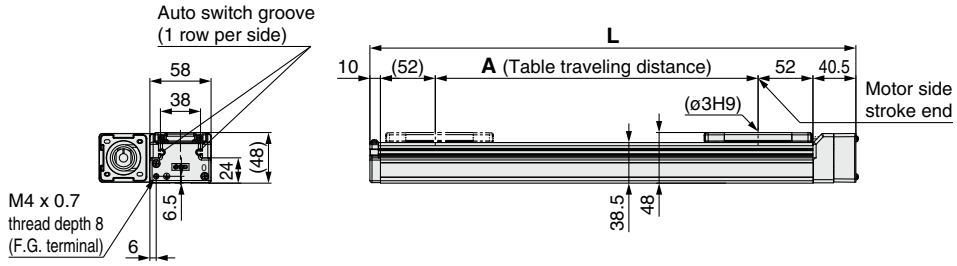

Motor mounting position: R

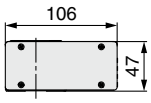

Motor mounting position: L

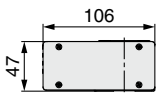

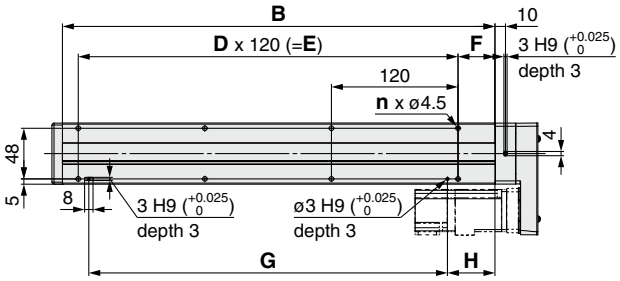

Mounting type: NZ/NY/NX

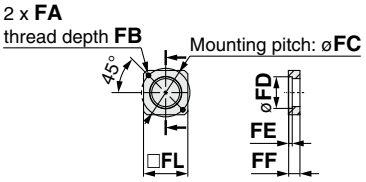

Mounting type: NM1/NM2/NM3

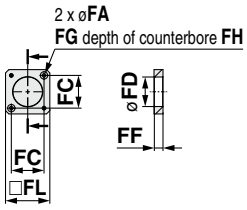

Applicable motor dimensions

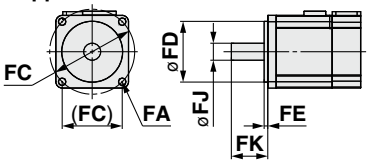

*1 When mounting the actuator using the body mounting reference plane, set the height of the opposite surface or pin to be 3 mm or more. (Recommended height: 5 mm)

Dimensions

[mm]

Stroke	L	A	B	n	D	E	F	G	H
50	210.5	56	160	4	—	—	20	100	30
100	260.5	106	210				35		45
150	310.5	156	260						
200	360.5	206	310	6	2	240		220	
250	410.5	256	360						
300	460.5	306	410	8	3	360		340	
350	510.5	356	460						
400	560.5	406	510						
450	610.5	456	560	10	4	480		460	
500	660.5	506	610						
600	760.5	606	710	12	5	600		580	
700	860.5	706	810	14	6	720		700	
800	960.5	806	910	16	7	840		820	

Motor Mounting, Applicable Motor Dimensions

[mm]

Mounting type	FA		FB	FC	FD	FE (Max.)	FF	FG	FH	FJ	FK	FL
	Mounting type	Applicable motor										
NZ	M4 x 0.7	ø4.5	7.5	ø46	30	3.7	11	—	—	8	25 ±1	42
NY	M3 x 0.5	ø3.4	5.5	ø45	30	5	11	—	—	8	25 ±1	38
NX	M4 x 0.7	ø4.5	7	ø46	30	3.7	8	—	—	8	18 ±1	42
NM1	ø3.4	M3	—	□31	28	—	8.5	7	3.5	5*1	24 ±1	42
NM2	ø3.4	M3	—	□31	28	—	8.5	7	3.5	6	20 ±1	42
NM3	ø3.4	M3	—	□31	28	—	5.5	7	3.5	5*1	20 ±1	42

*1 Shaft type: D-cut shaft

Refer to the "Motor Mounting" on page 25 for details about motor mounting and included parts.

Dimensions: Ball Screw Drive

LEKFS32(L/R)

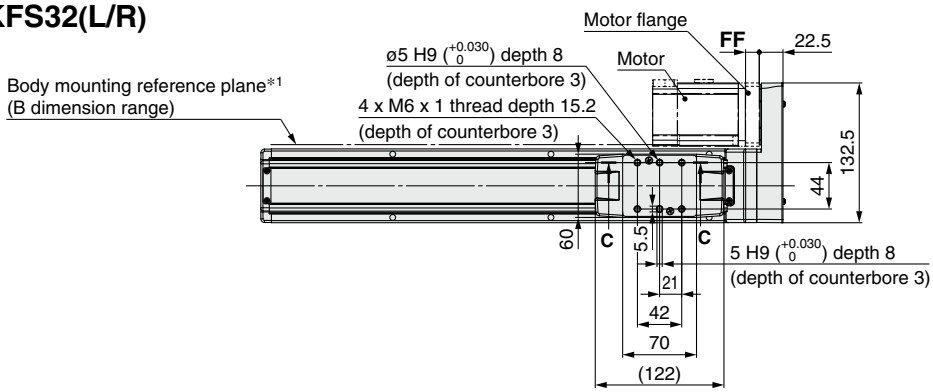

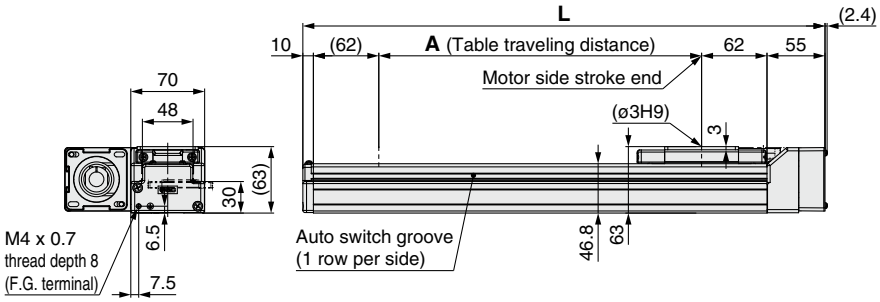

Motor mounting position: R

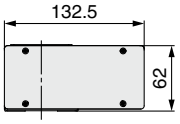

Motor mounting position: L

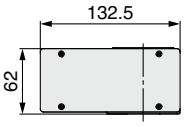

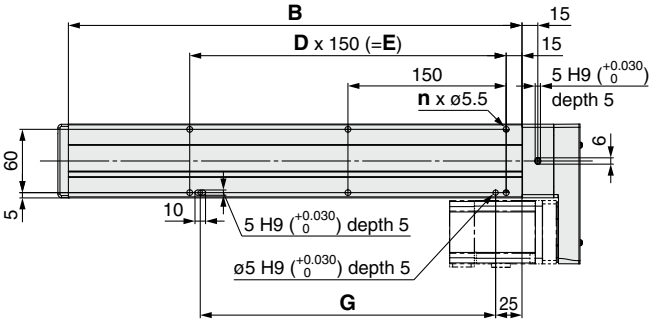

Mounting type: NZ/NY/NW/NU/NT

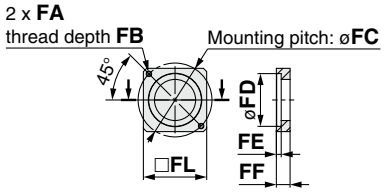

Mounting type: NM1/NM2

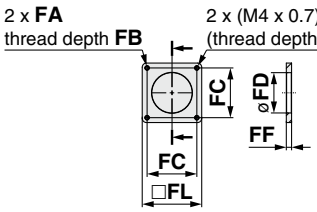

Applicable motor dimensions

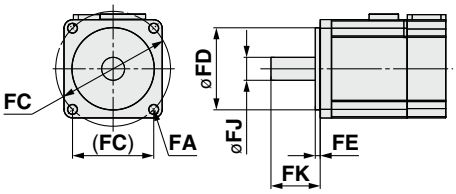

*1 When mounting the actuator using the body mounting reference plane, set the height of the opposite surface or pin to be 3 mm or more. (Recommended height: 5 mm)

Dimensions

[mm]

Stroke	L	A	B	n	D	E	G
50	245	56	180	4	—	—	130
100	295	106	230				
150	345	156	280				
200	395	206	330	6	2	300	280
250	445	256	380				
300	495	306	430				
350	545	356	480	8	3	450	430
400	595	406	530				
450	645	456	580				
500	695	506	630	10	4	600	580
600	795	606	730				
700	895	706	830	12	5	750	730
800	995	806	930	14	6	900	880
900	1095	906	1030				
1000	1195	1006	1130	16	7	1050	1030

Motor Mounting, Applicable Motor Dimensions

[mm]

Mounting type	FA		FB	FC	FD	FE (Max.)	FF	FJ	FK	FL	FM
	Mounting type	Applicable motor									
NZ	M5 x 0.8	ø5.8	8.5	ø70	50	4.6	13	14	30 ±1	60	—
NY	M4 x 0.7	ø4.5	8	ø70	50	4.6	13	11	30 ±1	60	—
NW	M5 x 0.8	ø5.8	8.5	ø70	50	4.6	13	9	25 ±1	60	—
NU	M5 x 0.8	ø5.8	8.5	ø70	50	4.6	10.6	11	23 ±1	60	—
NT	M5 x 0.8	ø5.8	8.5	ø70	50	4.6	17	12	30 ±1	60	—
NM1	M4 x 0.7	ø4.5	5	□47.14	38.2	—	5	6.35*1	20 ±1	56.4	5
NM2	M4 x 0.7	ø4.5	8	□50	38.2	—	11.5	10	24 ±1	60	7

*1 Shaft type: D-cut shaft

Refer to the "Motor Mounting" on page 25 for details about motor mounting and included parts.

Dimensions: Ball Screw Drive

LEKFS40(L/R)

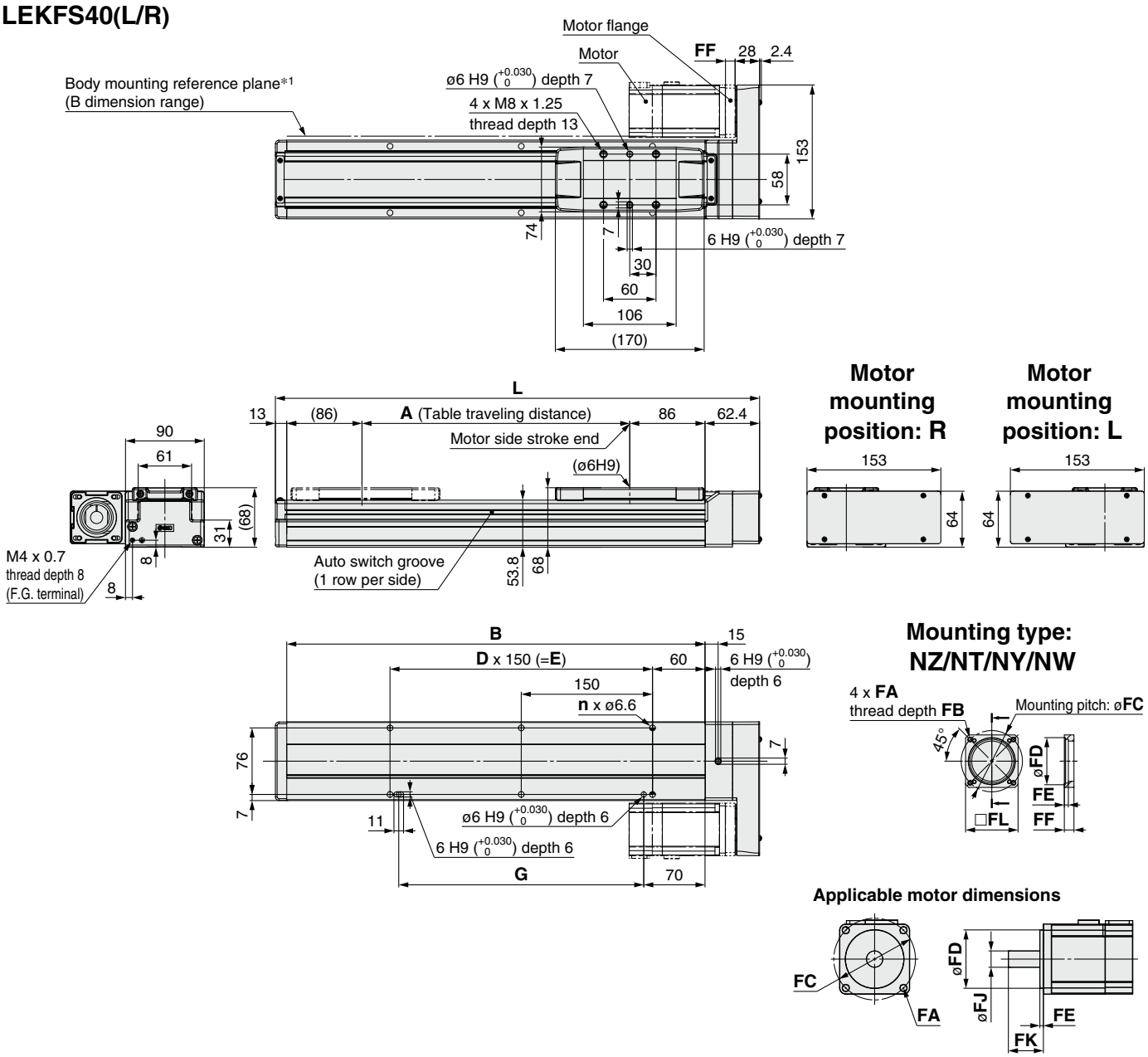

Dimensions

[mm]

Stroke	L	A	B	n	D	E	G
150	403.4	156	328	4	—	150	130
200	453.4	206	378	6	2	300	280
250	503.4	256	428				
300	553.4	306	478				
350	603.4	356	528	8	3	450	430
400	653.4	406	578				
450	703.4	456	628				
500	753.4	506	678	10	4	600	580
600	853.4	606	778				
700	953.4	706	878	12	5	750	730
800	1053.4	806	978	14	6	900	880
900	1153.4	906	1078				
1000	1253.4	1006	1178	16	7	1050	1030
1100	1353.4	1106	1278	18	8	1200	1180
1200	1453.4	1206	1378				

*1 When mounting the actuator using the body mounting reference plane, set the height of the opposite surface or pin to be 3 mm or more. (Recommended height: 5 mm)

Motor Mounting, Applicable Motor Dimensions

[mm]

Mounting type	FA		FB	FC	FD	FE (Max.)	FF	FJ	FK	FL
	Mounting type	Applicable motor								
NZ	M5 x 0.8	ø5.8	8.5	ø70	50	4.6	11	14	30 ±1	60
NY	M4 x 0.7	ø4.5	8	ø70	50	4.6	11	14	30 ±1	60
NW	M5 x 0.8	ø5.8	8.5	ø70	50	4.6	11	9	25 ±1	60
NT	M5 x 0.8	ø5.8	8.5	ø70	50	4.6	14.5	12	30 ±1	60

Motor Mounting: In-line

- When mounting a hub/pulley, remove all oil content, dust, dirt, etc., adhered to the shaft and the inside of the hub/pulley beforehand.
- This product does not include the motor and motor mounting screws. (Provided by the customer)
- Prepare a motor with a round shaft end. For the "NM1" or "NM3," prepare a D-cut shaft.
- Take measures to prevent the loosening of the motor mounting screws and hexagon socket head set screws.

Mounting type: NZ, NY, NX, NW, NV, NU, NT, NM2

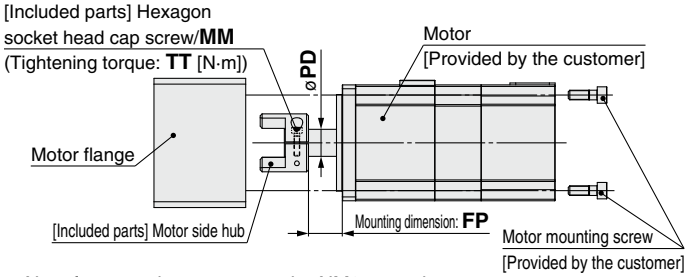

∗ Note for mounting a motor to the NM2 mounting type
Motor mounting screws for the LEKFS25 are fixed starting from the motor flange side. (Opposite of the drawing)

Mounting type: NM1

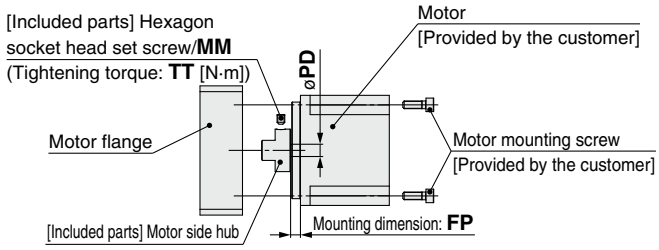

∗ Note for mounting a hub to the NM1 mounting type
When mounting the hub to the motor, make sure to position the set screw vertical to the D-cut surface of the motor shaft. (Refer to the figure shown below.)
∗ Motor mounting screws for the LEKFS25 are fixed starting from the motor flange side. (Opposite of the drawing)

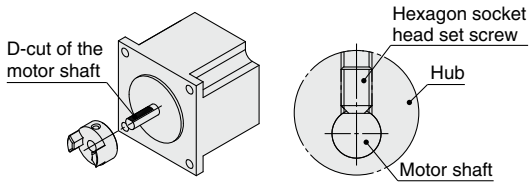

Size: 25 Hub Mounting Dimensions [mm]

Mounting type	MM	TT	PD	FP
NZ	M2.5 x 10	1.0	8	12.4
NY	M2.5 x 10	1.0	8	12.4
NX	M2.5 x 10	1.0	8	6.9
NM1	M3 x 4	0.63	5	11.9
NM2	M2.5 x 10	1.0	6	10

Size: 32 Hub Mounting Dimensions [mm]

Mounting type	MM	TT	PD	FP
NZ	M3 x 12	1.5	14	17.5
NY	M4 x 12	2.5	11	17.5
NX	M4 x 12	2.5	9	5.2
NW	M4 x 12	2.5	9	13
NV	M4 x 12	2.5	9	5.2
NU	M4 x 12	2.5	11	13
NT	M3 x 12	1.5	12	17.5
NM1	M4 x 5	1.5	6.35	5.4
NM2	M4 x 12	2.5	10	12

Size: 40 Hub Mounting Dimensions [mm]

Mounting type	MM	TT	PD	FP
NZ	M3 x 12	1.5	14	17.5
NY	M3 x 12	1.5	14	17.5
NX	M4 x 12	2.5	9	5.2
NW	M4 x 12	2.5	9	13
NV	M4 x 12	2.5	9	5.2
NU	M4 x 12	2.5	11	13
NT	M3 x 12	1.5	12	17.5
NM1	M4 x 5	1.5	6.35	5.1
NM2	M4 x 12	2.5	10	12

Motor Mounting Diagram

Mounting type: NZ, NY, NW, NU, NT

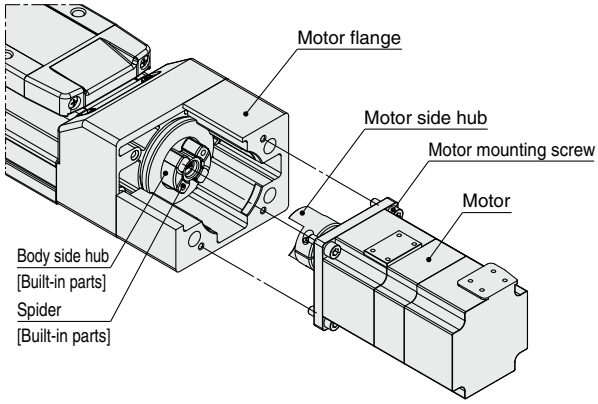

Mounting procedure
1) Secure the motor hub to the motor (provided by the customer) with the MM hexagon socket head cap screw.
2) Check the motor hub position, and then insert it. (Refer to the mounting diagram.)
3) Secure the motor to the motor flange with the motor mounting screws (provided by the customer).

Mounting type: NX, NV, NM1, NM2

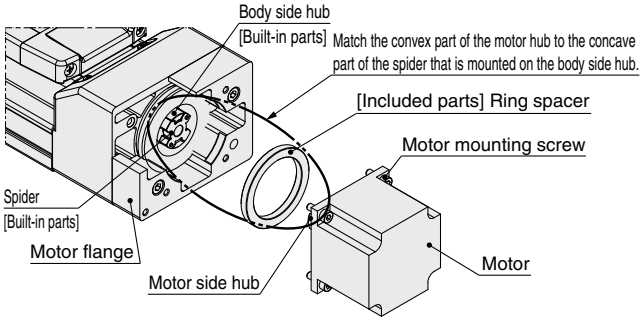

Mounting procedure
1) Secure the motor hub to the motor (provided by the customer) with the MM hexagon socket head cap screw (Mounting type: NX, NV, NM2) or MM hexagon socket head set screw (Mounting type: NM1).
2) Check the motor hub position, and then insert it. (Refer to the mounting diagram.)
3) Mount the ring spacer to the motor.
4) Secure the motor to the motor flange with the motor mounting screws (provided by the customer).
∗ For the LEKFS25
4) Remove the motor flange, which has been temporarily mounted, from the housing B, and secure the motor to the motor flange using the motor mounting screws (that are to be prepared by the customer).
5) Tighten the motor flange to the housing B using motor flange mounting screws (included parts). (Tightening torque: 1.5 [N·m])

Included Parts List

Size: 25

Description	Quantity				
	Mounting type				
	NZ	NY	NX	NM1	NM2
Motor side hub	1	1	1	1	1
Hexagon socket head cap screw/set screw (to secure the hub)∗1	1	1	1	1	1
Hexagon socket head cap screw M4 x 18 (to secure the motor flange)	—	—	—	2	2
Ring spacer	—	—	—	1	1

∗1 For screw sizes, refer to the hub mounting dimensions.

Size: 32, 40

Description	Quantity								
	Mounting type								
	NZ	NY	NX	NW	NV	NU	NT	NM1	NM2
Motor side hub	1	1	1	1	1	1	1	1	1
Hexagon socket head cap screw/set screw (to secure the hub)∗1	1	1	1	1	1	1	1	1	1
Ring spacer	—	—	1	—	1	—	—	1	1

∗1 For screw sizes, refer to the hub mounting dimensions.

Motor Mounting: Motor Parallel

Mounting type: NZ, NY, NX, NW, NU, NT, NM2

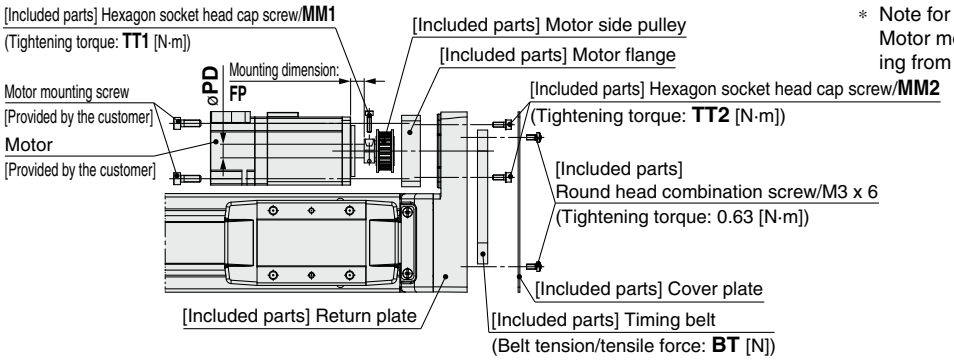

∗ Note for mounting a motor to the NM2 mounting type Motor mounting screws for the LEKFS25 are fixed starting from the motor flange side. (Opposite of the drawing)

Mounting type: NM1, NM3

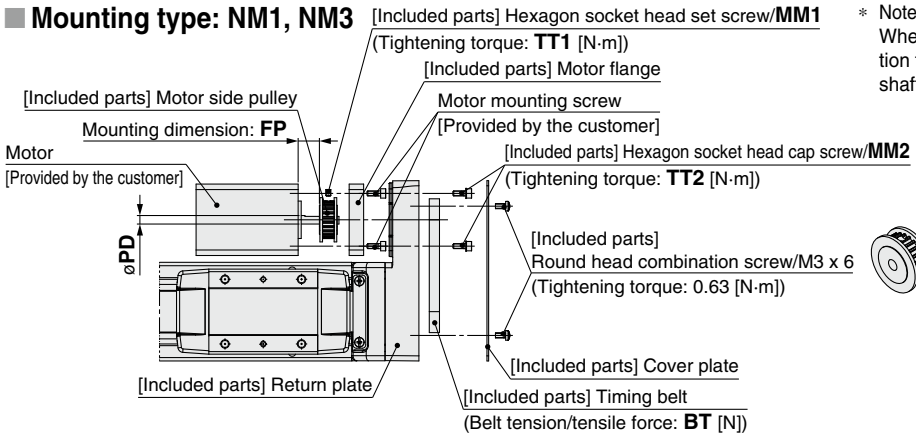

∗ Note for mounting a pulley to the NM1 and NM3 mounting type When mounting the pulley to the motor, make sure to position the set screw vertical to the D-cut surface of the motor shaft. (Refer to the figure shown below.)

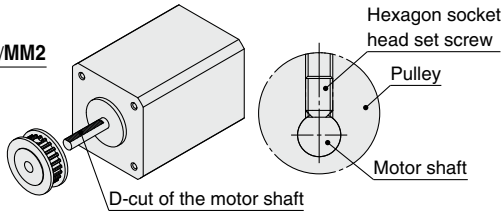

Motor Mounting Diagram

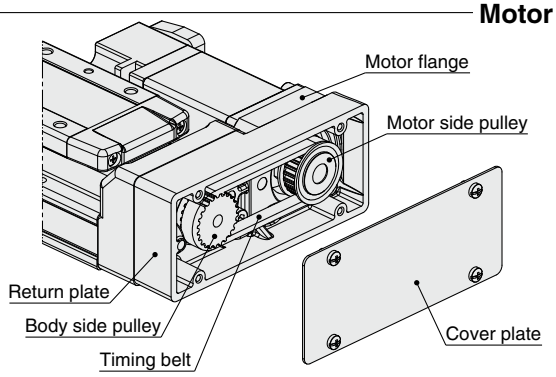

Mounting procedure

1) Secure the motor side pulley to the motor (provided by the customer) with the MM1 hexagon socket head cap screw. For mounting type "NM1/NM3", secure them with the MM1 hexagon socket head set screw.
2) Secure the motor to the motor flange with the motor mounting screws (provided by the customer).
3) Put the timing belt on the motor side pulley and body side pulley, and then secure it temporarily with the hexagon socket head cap screws (2 x MM2). (Refer to the left diagram.)
4) Apply the belt tension and tighten the timing belt with the hexagon socket head cap screws (2 x MM2).
5) Secure the return plate with the round head combination screws (4 x M3 x 6).

Size: 25 Pulley Mounting Dimensions [mm]

Mounting type	MM1	TT1	MM2	TT2	PD	FP	BT
NZ/NY	M2.5 x 10	1.0	M3 x 8	0.63	8	8	19.6
NX	M2.5 x 10	1.0	M3 x 8	0.63	8	5	19.6
NM1	M3 x 5	0.63	M3 x 8	0.63	5	12.5	19.6
NM2	M2.5 x 10	1.0	M3 x 8	0.63	6	5.5	19.6
NM3	M3 x 5	0.63	M3 x 8	0.63	5	9.5	19.6

Size: 32 Pulley Mounting Dimensions [mm]

Mounting type	MM1	TT1	MM2	TT2	PD	FP	BT
NZ	M3 x 12	1.5	M4 x 12	1.5	14	6.6	49
NY	M3 x 12	1.5	M4 x 12	1.5	11	6.6	49
NW	M4 x 12	2.5	M4 x 12	1.5	9	6.6	49
NU	M3 x 12	1.5	M4 x 12	1.5	11	4.2	49
NT	M3 x 12	1.5	M4 x 12	1.5	12	10.6	49
NM1	M3 x 4	0.63	M4 x 12	1.5	6.35	10.6	49
NM2	M3 x 12	1.5	M4 x 12	1.5	10	5.1	49

Size: 40 Pulley Mounting Dimensions [mm]

Mounting type	MM1	TT1	MM2	TT2	PD	FP	BT
NZ/NY	M4 x 12	2.5	M4 x 12	1.5	14	4.5	98.1
NW	M4 x 12	2.5	M4 x 12	1.5	9	4.5	98.1
NT	M4 x 12	2.5	M4 x 12	1.5	12	8	98.1

Included Parts List

Size: 25

Description	Quantity
Motor flange	1
Motor side pulley	1
Cover plate	1
Timing belt	1
Hexagon socket head cap screw/set screw (to secure the pulley)∗1	1
Hexagon socket head cap screw∗1 (to secure the motor flange)	2
Round head combination screw M3 x 6	4

∗1 For screw sizes, refer to the pulley mounting dimensions.

Size: 32, 40

Description	Quantity	
	32	40
Motor flange	1	1
Motor side pulley	1	1
Cover plate	1	1
Timing belt	1	1
Hexagon socket head cap screw/set screw (to secure the pulley)∗1	1	1
Hexagon socket head cap screw∗1 (to secure the motor flange)	2	4
Round head combination screw M3 x 6	4	4

∗1 For screw sizes, refer to the pulley mounting dimensions.

LEKFS Series
Motor Mounting Parts

Motor Flange Option

A motor can be added to the motorless specification after purchase. The applicable mounting types are shown below. (Except NM1 and NM3)
Use the following part numbers to select a compatible motor flange option and place an order.
∗ The motor flange option is the same as that of the LEFS series.

How to Order

LEF S – MF 25 □ – NZ

Ball screw drive ● ❶ ❷ ❸

❶ Size

25	For LEF□25
32	For LEF□32
40	For LEF□40

❷ Motor mounting position

Nil	In-line
P	(Right side/Left side) parallel

❸ Mounting type

NZ	NV
NY	NU
NX	NT
NW	NM2

∗ Select only NZ, NY, NX or NM2 for the LEFS-MF25.

Compatible Motors and Mounting Types∗5

Applicable motor model		Size/Mounting type														
Manufacturer	Series	25						32/40								
		NZ	NY	NX	NM1	NM2	NM3	NZ	NY	NX	NW	NV	NU	NT	NM1	NM2
Mitsubishi Electric Corporation	MELSERVO JN/J4/J5	●	—	—	—	—	—	●	—	—	—	—	—	—	—	—
YASKAWA Electric Corporation	Σ-V/7/X	●∗4	—	—	—	—	—	●	—	—	—	—	—	—	—	—
SANYO DENKI CO., LTD.	SANMOTION R	●	—	—	—	—	—	●	—	—	—	—	—	—	—	—
OMRON Corporation	OMNUC G5/1S	●	—	—	—	—	—	—	●	—	—	—	—	—	—	—
Panasonic Corporation	MINAS A5/A6	● (MHMF only)	●	—	—	—	—	—	●	—	—	—	—	—	—	—
FANUC CORPORATION	βis (-B)	●	—	—	—	—	—	● (β1 only)	—	—	●	—	—	—	—	—
NIDEC SANKYO CORPORATION	S-FLAG	●	—	—	—	—	—	●	—	—	—	—	—	—	—	—
KEYENCE CORPORATION	SV/SV2	●∗4	—	—	—	—	—	●	—	—	—	—	—	—	—	—
FUJI ELECTRIC CO., LTD.	ALPHA7	●	—	—	—	—	—	●	—	—	—	—	—	—	—	—
MinebeaMitsumi Inc.	Hybrid stepping motors	—	—	—	●∗1	—	●∗3	—	—	—	—	—	—	—	●∗2	—
Shinano Kenshi Co., Ltd.	CSB-BZ	—	—	—	●∗1	—	●∗3	—	—	—	—	—	—	—	—	—
ORIENTAL MOTOR Co., Ltd.	α STEP AR/AZ	—	—	—	—	● (46 only)	—	—	—	—	—	—	—	—	—	●∗2
FASTECH Co., Ltd.	Ezi-SERVO	—	—	—	●	—	—	—	—	—	—	—	—	—	●∗2	—
Rockwell Automation, Inc. (Allen-Bradley)	Kinetix MP/VP/TL	● (TL only)	—	—	—	—	—	—	—	●∗1 (MP/VP only)	—	—	—	● (TL only)	—	—
Beckhoff Automation GmbH	AM 30/31/80/81	●	—	—	—	—	—	—	—	●∗1 (80/81 only)	—	●∗1 (30 only)	●∗2 (31 only)	—	—	—
Siemens AG	SIMOTICS S-1FK7	—	—	●	—	—	—	—	—	●∗1	—	—	—	—	—	—
Delta Electronics, Inc.	ASDA-A2	●	—	—	—	—	—	●	—	—	—	—	—	—	—	—
ANCA Motion	AMD2000	●	—	—	—	—	—	●	—	—	—	—	—	—	—	—

∗ When the LEF□□□$^{NM1}_{NM3}$□-□ is purchased, it is not possible to change to other mounting types.

∗1 Motor mounting position: In-line only
∗2 Only size 32 is available when the motor mounting position is right (or left) side parallel.
∗3 Motor mounting position: Right (or left) side parallel only
∗4 For some motors, the connector may protrude from the motor body. Be sure to check for interference with the mounting surface before selecting a motor.
∗5 The compatible motors and mounting types are typical examples. Select the mounting type after referring to the "Motor Mounting, Applicable Motor Dimensions" tables on the following actuator body "Dimensions" pages.

Dimensions: Motor Flange Option

Motor mounting position: In-line

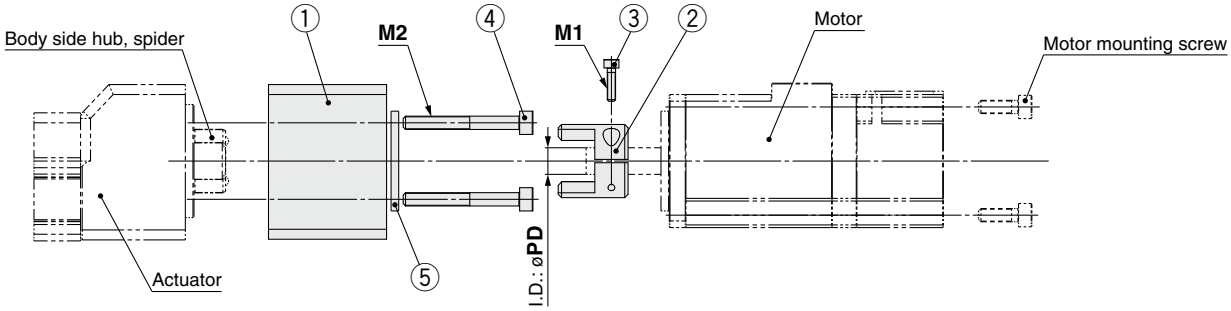

Component Parts

No.	Description	Quantity
1	**Motor flange**	1
2	**Hub (Motor side)**	1
3	**Hexagon socket head cap screw (to secure the hub)**	1
4	**Hexagon socket head cap screw (to mount the motor flange)**	2
5	**Ring spacer (Only for mounting types "NM2" in size 25 and "NX," "NV," and "NM2" in sizes 32 and 40)**	1

Motor flange details

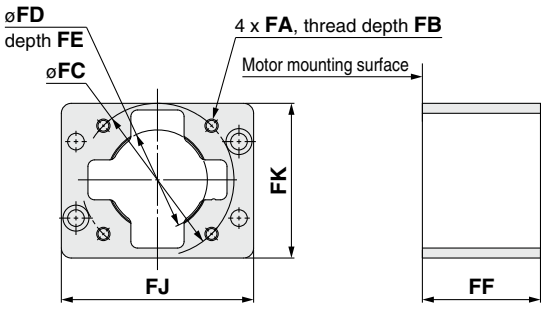

For NM2

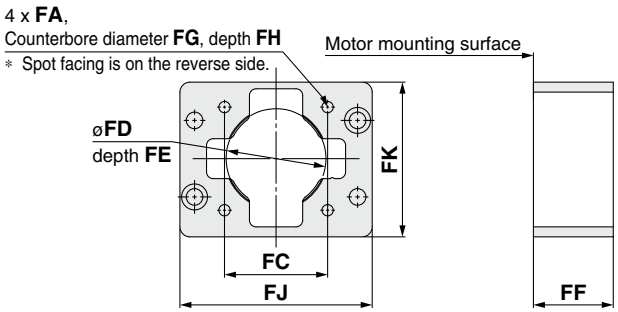

Dimensions

[mm]

Size	Mounting type	FA	FB	FC	FD	FE	FF	FG	FH	FJ	FK	M1	M2	PD
25	**NZ/NX**	M4 x 0.7	8	46	30	3.5	35.5	—	—	57.8	46.5	M2.5 x 10	M4 x 35	8
	NY	M3 x 0.5	8	45	30	3.5	35.5	—	—	57.8	46.5	M2.5 x 10	M4 x 35	8
	NM2	ø3.4	—	31	22*1	2.5*1	33.1	6.5	22.6	57.8	46.5	M2.5 x 10	M4 x 18	6
32	**NZ**	M5 x 0.8	9	70	50	5	46	—	—	69.8	61.4	M3 x 12	M5 x 40	14
	NY	M4 x 0.7	8	70	50	5	46	—	—	69.8	61.4	M4 x 12	M5 x 40	11
	NX	M5 x 0.8	9	63	40*1	5	49.7	—	—	69.8	61.4	M4 x 12	M5 x 40	9
	NW	M5 x 0.8	9	70	50	5	47.5	—	—	69.8	61.4	M4 x 12	M5 x 40	9
	NV	M4 x 0.7	8	63	40*1	5	49.7	—	—	69.8	61.4	M4 x 12	M5 x 40	9
	NU	M5 x 0.8	9	70	50	5	47.5	—	—	69.8	61.4	M4 x 12	M5 x 40	11
	NT	M5 x 0.8	9	70	50	5	46	—	—	69.8	61.4	M3 x 12	M5 x 40	12
	NM2	M4 x 0.7	8	50	36*1	4.5*1	40.1	—	—	69.8	61.4	M4 x 12	M5 x 25	10
40	**NZ**	M5 x 0.8	9	70	50	5	47.5	—	—	89.8	66.9	M3 x 12	M5 x 40	14
	NY	M4 x 0.7	8	70	50	5	47.5	—	—	89.8	66.9	M3 x 12	M5 x 40	14
	NX	M5 x 0.8	9	63	40*1	5	51	—	—	89.8	66.9	M4 x 12	M5 x 40	9
	NW	M5 x 0.8	9	70	50	5	48.8	—	—	89.8	66.9	M4 x 12	M5 x 40	9
	NV	M4 x 0.7	8	63	40*1	5	51	—	—	89.8	66.9	M4 x 12	M5 x 40	9
	NU	M5 x 0.8	9	70	50	5	48.8	—	—	89.8	66.9	M4 x 12	M5 x 40	11
	NT	M5 x 0.8	9	70	50	5	47.5	—	—	89.8	66.9	M3 x 12	M5 x 40	12
	NM2	M4 x 0.7	8	50	36*1	4.5*1	41.4	—	—	89.8	66.9	M4 x 12	M5 x 25	10

*1 Dimensions after mounting a ring spacer

Dimensions: Motor Flange Option

Motor mounting position: Motor parallel

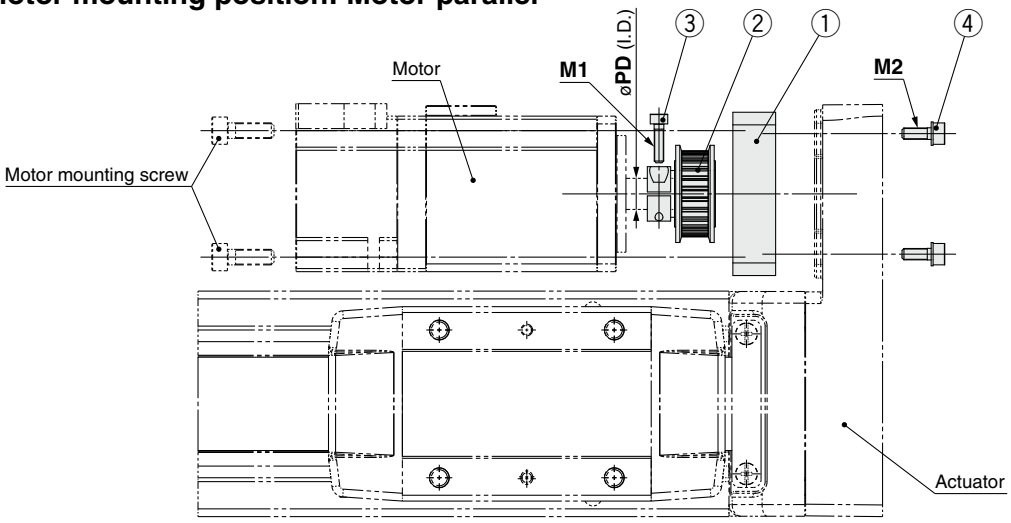

Component Parts

No.	Description	Quantity Size 25, 32	Quantity Size 40
1	**Motor flange**	1	1
2	**Motor pulley**	1	1
3	**Hexagon socket head cap screw (to secure the pulley)**	1	1
4	**Hexagon socket head cap screw (to mount the motor flange)**	2	4

Motor flange details

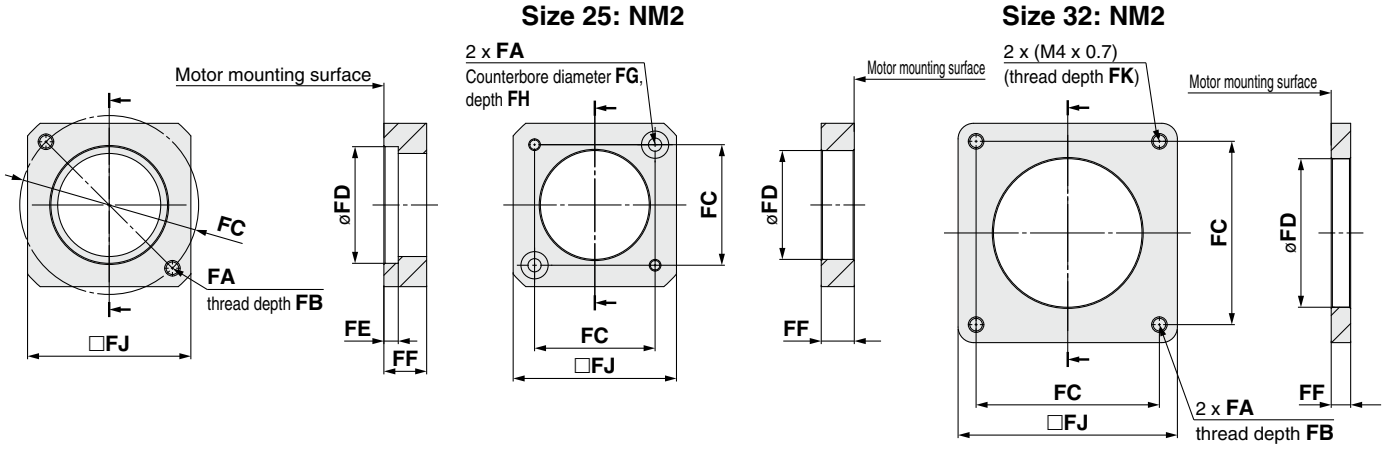

Dimensions

[mm]

Size	Mounting type	FA	FB	FC	FD	FE	FF	FG	FH	FJ	FK	M1	M2	PD
25	**NZ**	2 x M4 x 0.7	7.5	46	30	3.7	11	—	—	42	—	M2.5 x 10	M3 x 8	8
	NY	2 x M3 x 0.5	5.5	45	30	5	11	—	—	38	—	M2.5 x 10	M3 x 8	8
	NX	2 x M4 x 0.7	7	46	30	3.7	8	—	—	42	—	M2.5 x 10	M3 x 8	8
	NM2	ø3.4	—	31	28	—	8.5	7	3.5	42	—	M2.5 x 10	M3 x 8	6
32	**NZ**	2 x M5 x 0.8	8.5	70	50	4.6	13	—	—	60	—	M3 x 12	M4 x 12	14
	NY	2 x M4 x 0.7	8	70	50	4.6	13	—	—	60	—	M3 x 12	M4 x 12	11
	NW	2 x M5 x 0.8	8.5	70	50	4.6	13	—	—	60	—	M4 x 12	M4 x 12	9
	NU	2 x M5 x 0.8	8.5	70	50	4.6	10.6	—	—	60	—	M3 x 12	M4 x 12	11
	NT	2 x M5 x 0.8	8.5	70	50	4.6	17	—	—	60	—	M3 x 12	M4 x 12	12
	NM2	M4 x 0.7	8	50	38.2	—	11.5	—	—	60	7	M3 x 12	M4 x 12	10
40	**NZ**	4 x M5 x 0.8	8.5	70	50	4.6	11	—	—	60	—	M4 x 12	M4 x 12	14
	NY	4 x M4 x 0.7	8	70	50	4.6	11	—	—	60	—	M4 x 12	M4 x 12	14
	NW	4 x M5 x 0.8	8.5	70	50	4.6	11	—	—	60	—	M4 x 12	M4 x 12	9
	NT	4 x M5 x 0.8	8.5	70	50	4.6	14.5	—	—	60	—	M4 x 12	M4 x 12	12

Auto Switch Mounting

Auto Switch Mounting Position

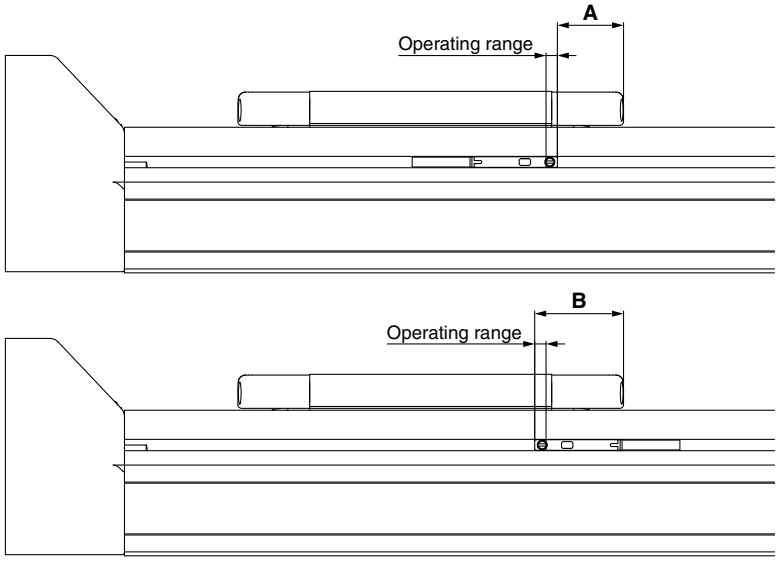

Table 1 Auto switch mounting dimensions [mm]

Model	Size	A	B	Operating range
LEKFS	25	17.5	23.5	3.0
	32	26.3	32.3	3.4
	40	32.2	38.2	3.6

∗ The applicable auto switch is D-M9 (N/P/B) (W) (M/L/Z).
∗ The operating range is a guideline including hysteresis, not meant to be guaranteed. There may be large variations depending on the ambient environment.
∗ Adjust the auto switch after confirming the operating conditions in the actual setting.

Auto Switch Mounting

LEKFS25

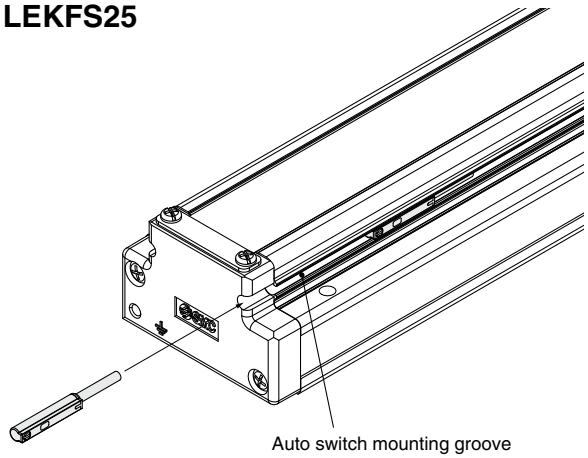

Auto Switch Mounting Screw

Tightening torque [N·m]
0.1 to 0.15

LEKFS32/40

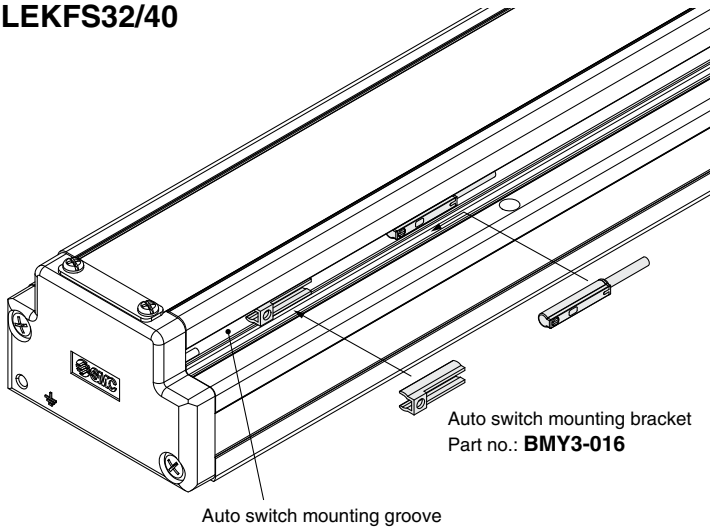

∗ The applicable auto switch is D-M9 (N/P/B) (W) (M/L/Z).
∗ Tighten the auto switch mounting screws (provided together with the auto switch), using a precision screwdriver with a handle diameter of approximately 5 to 6 mm.
∗ Prepare an auto switch mounting bracket (BMY3-016) when mounting the auto switch on to the LEKFS32/40.

Solid State Auto Switch Direct Mounting Type
D-M9N/D-M9P/D-M9B

Refer to the SMC website for details on products that are compliant with international standards.

Grommet

- **2-wire load current is reduced (2.5 to 40 mA).**
- **Using flexible cable as standard spec.**

Auto Switch Specifications

PLC: Programmable Logic Controller

D-M9□, D-M9□V (With indicator light)			
Auto switch model	**D-M9N**	**D-M9P**	**D-M9B**
Electrical entry direction	In-line		
Wiring type	3-wire		2-wire
Output type	NPN	PNP	—
Applicable load	IC circuit, Relay, PLC		24 VDC relay, PLC
Power supply voltage	5, 12, 24 VDC (4.5 to 28 V)		—
Current consumption	10 mA or less		—
Load voltage	28 VDC or less	—	24 VDC (10 to 28 VDC)
Load current	40 mA or less		2.5 to 40 mA
Internal voltage drop	0.8 V or less at 10 mA (2 V or less at 40 mA)		4 V or less
Leakage current	100 μA or less at 24 VDC		0.8 mA or less
Indicator light	Red LED illuminates when turned ON.		
Standards	CE/UKCA marking, RoHS		

⚠Caution

Precautions

Fix the auto switch with the existing screw installed on the auto switch body. The auto switch may be damaged if a screw other than the one supplied is used.

Oilproof Flexible Heavy-duty Lead Wire Specifications

Auto switch model		**D-M9N**	**D-M9P**	**D-M9B**
Sheath	Outside diameter [mm]	2.6		
Insulator	Number of cores	3 cores (Brown/Blue/Black)		2 cores (Brown/Blue)
	Outside diameter [mm]	0.88		
Conductor	Effective area [mm²]	0.15		
	Strand diameter [mm]	0.05		
Min. bending radius [mm] (Reference values)		17		

∗ Refer to the **Web Catalog** for solid state auto switch common specifications.
∗ Refer to the **Web Catalog** for lead wire lengths.

Weight

[g]

Auto switch model		**D-M9N**	**D-M9P**	**D-M9B**
Lead wire length	0.5 m (**Nil**)	8		7
	1 m (**M**)	14		13
	3 m (**L**)	41		38
	5 m (**Z**)	68		63

Dimensions

[mm]

D-M9□

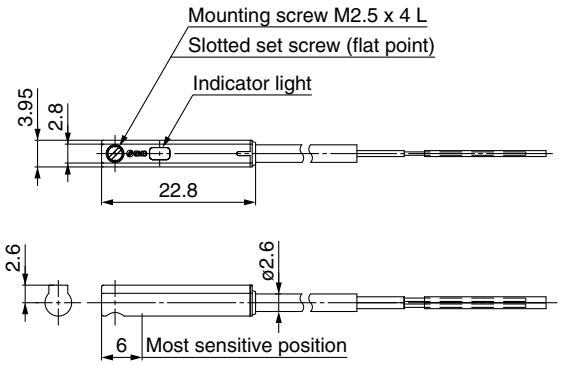

Normally Closed Solid State Auto Switch Direct Mounting Type
D-M9NE(V)/D-M9PE(V)/D-M9BE(V)

Refer to the SMC website for details on products that are compliant with international standards.

Grommet

- **Output signal turns on when no magnetic force is detected.**
- **Can be used for the actuator adopted by the solid state auto switch D-M9 series (excluding special order products)**

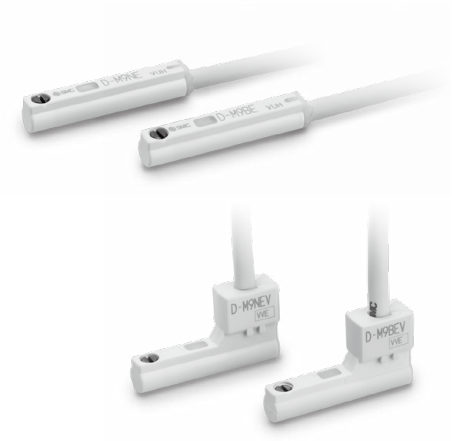

⚠Caution

Precautions

Fix the auto switch with the existing screw installed on the auto switch body. The auto switch may be damaged if a screw other than the one supplied is used.

Auto Switch Specifications

PLC: Programmable Logic Controller

D-M9□E, D-M9□EV (With indicator light)						
Auto switch model	D-M9NE	D-M9NEV	D-M9PE	D-M9PEV	D-M9BE	D-M9BEV
Electrical entry direction	In-line	Perpendicular	In-line	Perpendicular	In-line	Perpendicular
Wiring type	3-wire				2-wire	
Output type	NPN		PNP		—	
Applicable load	IC circuit, Relay, PLC				24 VDC relay, PLC	
Power supply voltage	5, 12, 24 VDC (4.5 to 28 V)				—	
Current consumption	10 mA or less				—	
Load voltage	28 VDC or less		—		24 VDC (10 to 28 VDC)	
Load current	40 mA or less				2.5 to 40 mA	
Internal voltage drop	0.8 V or less at 10 mA (2 V or less at 40 mA)				4 V or less	
Leakage current	100 μA or less at 24 VDC				0.8 mA or less	
Indicator light	Red LED illuminates when turned ON.					
Standards	CE/UKCA marking, RoHS					

Oilproof Flexible Heavy-duty Lead Wire Specifications

Auto switch model		D-M9NE(V)	D-M9PE(V)	D-M9BE(V)
Sheath	Outside diameter [mm]	2.6		
Insulator	Number of cores	3 cores (Brown/Blue/Black)		2 cores (Brown/Blue)
	Outside diameter [mm]	0.88		
Conductor	Effective area [mm²]	0.15		
	Strand diameter [mm]	0.05		
Min. bending radius [mm] (Reference values)		17		

∗ Refer to the **Web Catalog** for solid state auto switch common specifications.
∗ Refer to the **Web Catalog** for lead wire lengths.

Weight

[g]

Auto switch model		D-M9NE(V)	D-M9PE(V)	D-M9BE(V)
Lead wire length	0.5 m (**Nil**)	8		7
	1 m (**M**)∗1	14		13
	3 m (**L**)	41		38
	5 m (**Z**)∗1	68		63

∗1 The 1 m and 5 m options are produced upon receipt of order.

Dimensions

[mm]

D-M9□E

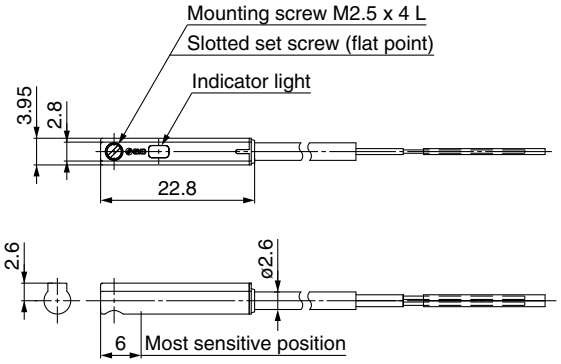

D-M9□EV

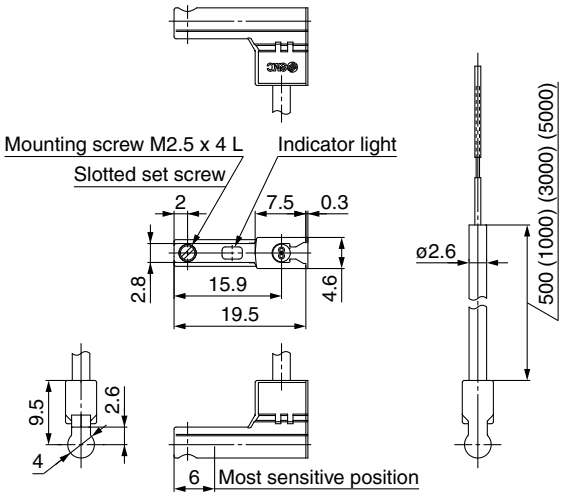

2-Color Indicator Solid State Auto Switch Direct Mounting Type
D-M9NW/D-M9PW/D-M9BW

Refer to the SMC website for details on products that are compliant with international standards.

Grommet

- **2-wire load current is reduced (2.5 to 40 mA).**
- **Using flexible cable as standard spec.**
- **The proper operating range can be determined by the color of the light. (Red → Green ← Red)**

⚠Caution

Precautions

Fix the auto switch with the existing screw installed on the auto switch body. The auto switch may be damaged if a screw other than the one supplied is used.

Auto Switch Specifications

PLC: Programmable Logic Controller

D-M9□W, D-M9□WV (With indicator light)			
Auto switch model	D-M9NW	D-M9PW	D-M9BW
Electrical entry direction	In-line		
Wiring type	3-wire		2-wire
Output type	NPN	PNP	—
Applicable load	IC circuit, Relay, PLC		24 VDC relay, PLC
Power supply voltage	5, 12, 24 VDC (4.5 to 28 V)		—
Current consumption	10 mA or less		—
Load voltage	28 VDC or less	—	24 VDC (10 to 28 VDC)
Load current	40 mA or less		2.5 to 40 mA
Internal voltage drop	0.8 V or less at 10 mA (2 V or less at 40 mA)		4 V or less
Leakage current	100 μA or less at 24 VDC		0.8 mA or less
Indicator light	Operating range ····· Red LED illuminates. Proper operating range ····· Green LED illuminates.		
Standards	CE/UKCA marking, RoHS		

Oilproof Flexible Heavy-duty Lead Wire Specifications

Auto switch model		D-M9NW	D-M9PW	D-M9BW
Sheath	Outside diameter [mm]	2.6		
Insulator	Number of cores	3 cores (Brown/Blue/Black)		2 cores (Brown/Blue)
	Outside diameter [mm]	0.88		
Conductor	Effective area [mm²]	0.15		
	Strand diameter [mm]	0.05		
Min. bending radius [mm] (Reference values)		17		

∗ Refer to the **Web Catalog** for solid state auto switch common specifications.
∗ Refer to the **Web Catalog** for lead wire lengths.

Weight

[g]

Auto switch model		D-M9NW	D-M9PW	D-M9BW
Lead wire length	0.5 m (**Nil**)	8		7
	1 m (**M**)	14		13
	3 m (**L**)	41		38
	5 m (**Z**)	68		63

Dimensions

[mm]

D-M9□W

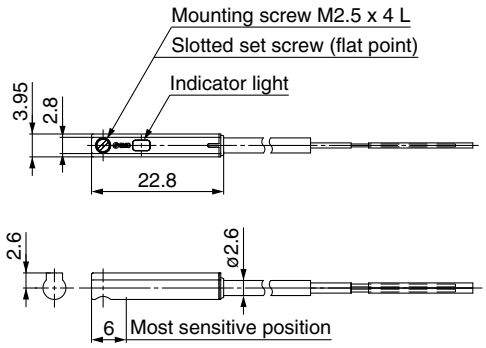

LEKFS Series
Specific Product Precautions 1

Be sure to read this before handling the products. Refer to the back cover for safety instructions. For electric actuator and auto switch precautions, refer to the "Handling Precautions for SMC Products" and the "Operation Manual" on the SMC website: https://www.smcworld.com

Design

⚠Caution

1. Do not apply a load in excess of the specification limits.

Select a suitable actuator by work load and allowable moment. If a load in excess of the specification limits is applied to the guide, adverse effects such as the generation of play in the guide, reduced accuracy, or reduced service life of the product may occur.

2. Do not use the product in applications where excessive external force or impact force is applied to it.

This can cause a malfunction.

Selection

⚠Warning

1. Do not increase the speed in excess of the specification limits.

Select a suitable actuator by the relationship of the allowable work load and speed, and the allowable speed of each stroke. If the product is used outside of the specification limits, adverse effects such as the generation of noise, reduced accuracy, or reduced service life of the product may occur.

2. Do not use the product in applications where excessive external force or impact force is applied to it.

This can cause a malfunction.

3. When the product repeatedly cycles with partial strokes (see the table below), operate it at a full stroke at least once every few dozens of cycles.

Failure to do so may result in the product running out of lubrication.

Model	Partial stroke
LEKFS□25	65 mm or less
LEKFS□32	70 mm or less
LEKFS□40	105 mm or less

4. When external force is to be applied to the table, it is necessary to add the external force to the work load as the total carried load when selecting a size.

When a cable duct or flexible moving tube is attached to the actuator, the sliding resistance of the table will increase, which may lead to the malfunction of the product.

5. Depending on the shape of the motor to be mounted, some of the product's interior parts (hub, spider, etc.) may be visible from the motor mounting surface. If this is undesirable, please contact your nearest sales office for details on options such as covers.

Handling

⚠Caution

1. Never allow the table to collide with the stroke end.

When the driver parameters, origin or programs are set incorrectly, the table may collide with the stroke end of the actuator during operation. Be sure to check these points before use.
If the table collides with the stroke end of the actuator, the guide, ball screw, belt, or internal stopper may break. This can result in abnormal operation.

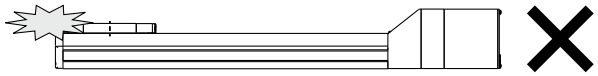

Handle the actuator with care when it is used in the vertical direction as the workpiece will fall freely from its own weight.

2. The actual speed of this actuator is affected by the work load and stroke.

Check the model selection section of the catalog.

3. Do not apply a load, impact, or resistance in addition to the transferred load during return to origin.

4. Do not dent, scratch, or cause other damage to the body or table mounting surfaces.

Doing so may cause unevenness in the mounting surface, play in the guide, or an increase in the sliding resistance.

5. Do not apply strong impact or an excessive moment while mounting a workpiece.

If an external force over the allowable moment is applied, it may cause play in the guide or an increase in the sliding resistance.

6. Keep the flatness of the mounting surface within 0.1 mm/500 mm.

If a workpiece or base does not sit evenly on the body of the product, play in the guide or an increase in the sliding resistance may occur.

7. Do not allow a workpiece to collide with the table during the positioning operation or within the positioning range.

8. Grease is applied to the dust seal band for sliding. When wiping off the grease to remove foreign matter, etc., be sure to apply it again.

9. When bottom mounted, the dust seal band may become warped.

LEKFS Series
Specific Product Precautions 2

Be sure to read this before handling the products. Refer to the back cover for safety instructions. For electric actuator and auto switch precautions, refer to the "Handling Precautions for SMC Products" and the "Operation Manual" on the SMC website: https://www.smcworld.com

Handling

⚠Caution

10. When mounting the product, use screws of adequate length and tighten them with adequate torque.

Tightening the screws with a higher torque than recommended may result in a malfunction, while tightening with a lower torque can result in the displacement of the mounting position or, in extreme conditions, the actuator could become detached from its mounting position.

Body fixed

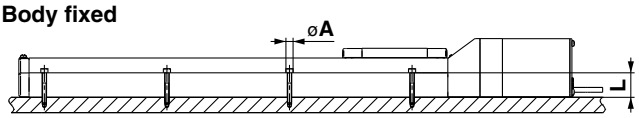

Model	Screw size	Max. tightening torque [N·m]	øA [mm]	L [mm]
LEKFS□25	M4	1.5	4.5	24
LEKFS□32	M5	3.0	5.5	30
LEKFS□40	M6	5.2	6.6	31

Body mounting

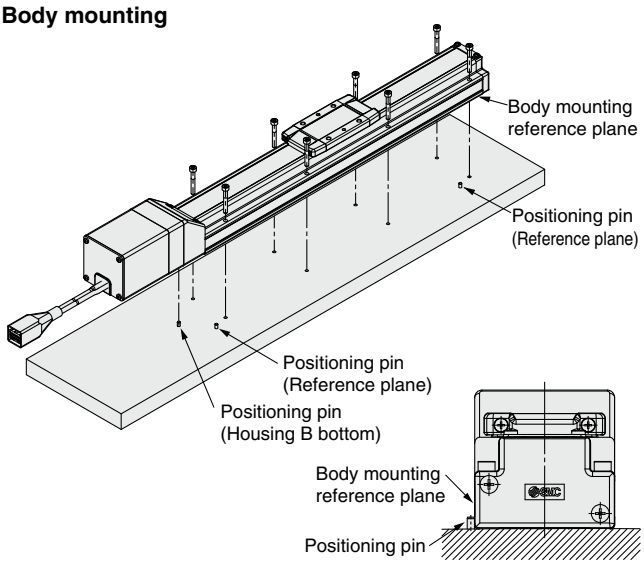

The traveling parallelism is the reference plane for the body mounting reference plane. If the traveling parallelism for a table is required, set the reference plane against parallel pins, etc.

Workpiece fixed

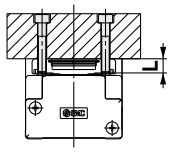

Model	Screw size	Max. tightening torque [N·m]	L (Max. screw-in depth) [mm]
LEKFS□25	M5 x 0.8	3.0	8
LEKFS□32	M6 x 1	5.2	9
LEKFS□40	M8 x 1.25	12.5	13

To prevent the workpiece retaining screws from touching the body, use screws that are 0.5 mm or shorter than the maximum screw-in depth. If long screws are used, they may touch the body and cause a malfunction.

11. Do not operate by fixing the table and moving the actuator body.

12. Check the specifications for the minimum speed of each actuator.

Failure to do so may result in unexpected malfunctions such as knocking.

Maintenance

⚠Warning

Maintenance frequency

Perform maintenance according to the table below.

Frequency	Appearance check	Internal check
Inspection before daily operation	○	—
Inspection every 6 months/1000 km/ 5 million cycles*1	○	○

*1 Select whichever comes first.

- **Items for visual appearance check**
  1. Loose set screws, Abnormal amount of dirt, etc.
  2. Check for visible damage, Check of cable joint
  3. Vibration, Noise
- **Items for internal check**
  1. Lubricant condition on moving parts
  2. Loose or mechanical play in fixed parts or fixing screws
- **Items for belt check**

  Stop operation immediately and replace the belt when any of the following occur. In addition, ensure your operating environment and conditions satisfy the requirements specified for the product.

  a. Tooth shape canvas is worn out
  Canvas fiber becomes fuzzy, Rubber is coming off and the fiber has become whitish, Lines of fibers have become unclear

  b. Peeling off or wearing of the side of the belt
  Belt corner has become rounded and frayed threads stick out

  c. Belt is partially cut
  Belt is partially cut, Foreign matter caught in the teeth of other parts is causing damage

  d. A vertical line on belt teeth is visible
  Damage which is made when the belt runs on the flange

  e. Rubber back of the belt is softened and sticky

  f . Cracks on the back of the belt are visible

Slider Type

Ball Screw Drive *LEFS Series*

p. 37

Belt Drive *LEFB Series*

p. 64

Model Selection

LEFS Series ▶p. 45

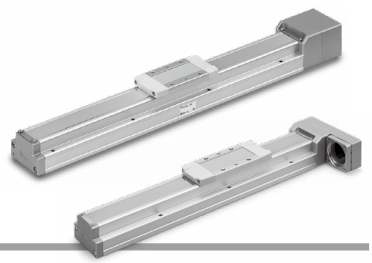

Selection Procedure

Step 1 Check the work load–speed. → **Step 2** Check the cycle time. → **Step 3** Check the allowable moment.

Selection Example

The model selection method shown below corresponds to SMC's standard motor. For use in combination with a motor from a different manufacturer, check the available product information of the motor to be used.

Operating conditions

- Workpiece mass: 55 [kg]
- Speed: 300 [mm/s]
- Acceleration/Deceleration: 3000 [mm/s²]
- Stroke: 200 [mm]
- Mounting position: Horizontal upward
- Incremental encoder
- Workpiece mounting condition:

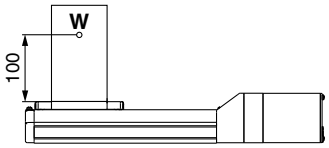

- Settling time

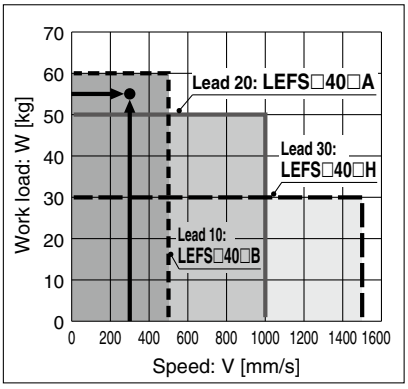

<Speed–Work Load Graph> (LEFS40)

Step 1 Check the work load–speed. <Speed–Work Load Graph>

Select a model based on the workpiece mass and speed which are within the range of the actuator body specifications while referencing the speed–work load graph (guide) on page 38.

Selection example) The **LEFS□40□B-200** can be temporarily selected as a possible candidate based on the graph shown on the right side.

∗ Refer to the selection method of motor manufacturers for regeneration resistance.

Step 2 Check the cycle time.

Calculate **the cycle time** using the following calculation method.

Cycle time:

T can be found from the following equation.

$$T = T1 + T2 + T3 + T4 \text{ [s]}$$

- T1: Acceleration time and T3: Deceleration time can be found by the following equation.

$$T1 = V/a1 \text{ [s]} \qquad T3 = V/a2 \text{ [s]}$$

- T2: Constant speed time can be found from the following equation.

$$T2 = \frac{L - 0.5 \cdot V \cdot (T1 + T3)}{V} \text{ [s]}$$

- T4: Settling time varies depending on the motor type and load. The value below is recommended.

$$T4 = 0.05 \text{ [s]}$$

∗ The conditions for the settling time vary depending on the motor or driver to be used.

Calculation example)
T1 to T4 can be calculated as follows.

$T1 = V/a1 = 300/3000 = 0.1$ [s],

$T3 = V/a2 = 300/3000 = 0.1$ [s]

$$T2 = \frac{L - 0.5 \cdot V \cdot (T1 + T3)}{V} = \frac{200 - 0.5 \cdot 300 \cdot (0.1 + 0.1)}{300} = 0.57 \text{ [s]}$$

$T4 = 0.05$ [s]

The cycle time can be found as follows.

$T = T1 + T2 + T3 + T4$

$= 0.1 + 0.57 + 0.1 + 0.05$

$= \mathbf{0.82}$ **[s]**

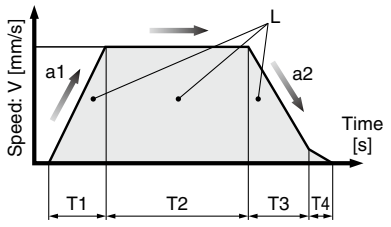

L : Stroke [mm] ··· (Operating condition)
V : Speed [mm/s] ··· (Operating condition)
a1: Acceleration [mm/s²] ··· (Operating condition)
a2: Deceleration [mm/s²] ··· (Operating condition)

T1: Acceleration time [s]
Time until reaching the set speed
T2: Constant speed time [s]
Time while the actuator is operating at a constant speed
T3: Deceleration time [s]
Time from the beginning of the constant speed operation to stop
T4: Settling time [s]
Time until positioning is completed

Step 3 Check the allowable moment. <Static allowable moment> (page 38) <Dynamic allowable moment> (page 42)

Confirm the moment that applies to the actuator is within the allowable range for both static and dynamic conditions.

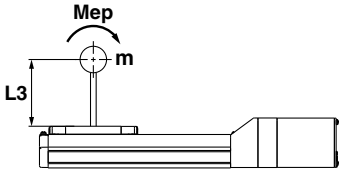

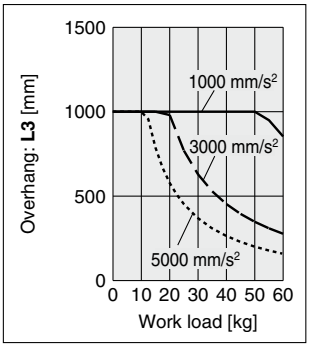

Based on the above calculation result, the LEFS□40□B-200 should be selected.

Speed–Work Load Graph (Guide)

∗ The values shown below are allowable values of the actuator body. Do not use the actuator so that it exceeds these specification ranges.
∗ The allowable speed is restricted depending on the stroke. Select it by referring to the "Allowable Stroke Speed" below.

LEFS□25/Ball Screw Drive

Horizontal

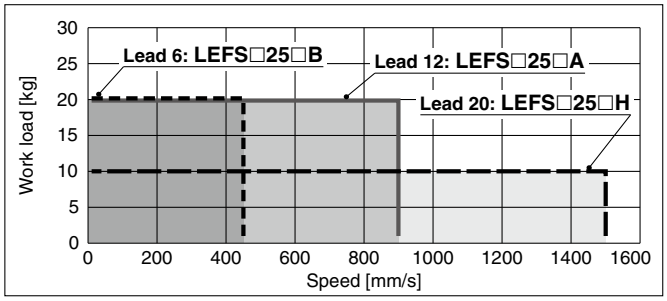

Vertical

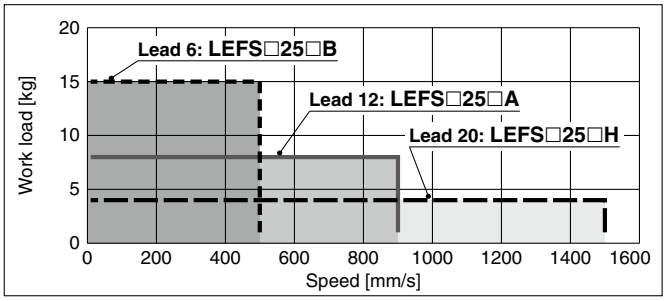

LEFS□32/Ball Screw Drive

Horizontal

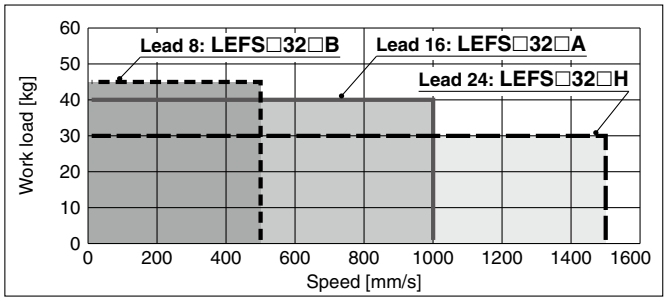

Vertical

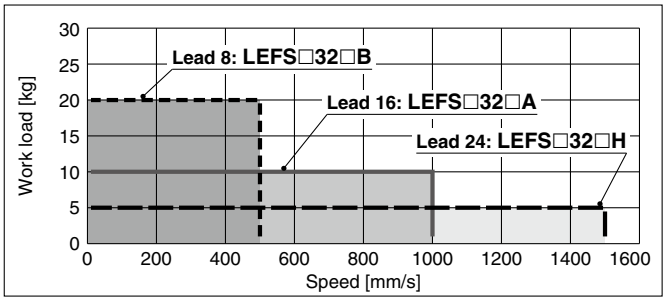

LEFS□40/Ball Screw Drive

Horizontal

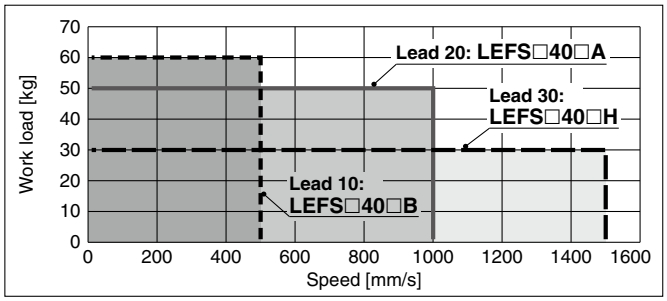

Vertical

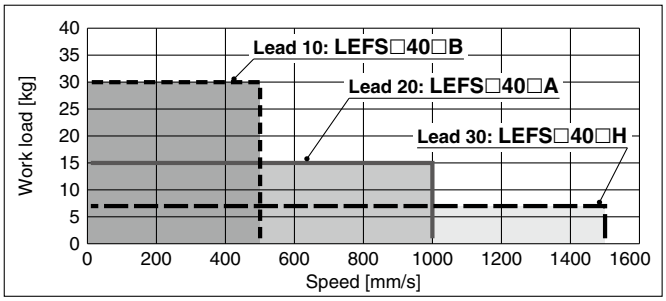

Allowable Stroke Speed

[mm/s]

Model	AC servo motor	Lead Symbol	Lead [mm]	Stroke [mm] Up to 100	Up to 200	Up to 300	Up to 400	Up to 500	Up to 600	Up to 700	Up to 800	Up to 900	Up to 1000	Up to 1100	Up to 1200
LEFS25	100 W equivalent	H	20	1500				1200	900	700	550	—	—	—	—
		A	12	900				720	540	420	330	—	—	—	—
		B	6	450				360	270	210	160	—	—	—	—
		(Motor rotation speed)		(4500 rpm)				(3650 rpm)	(2700 rpm)	(2100 rpm)	(1650 rpm)	—	—	—	—
LEFS32	200 W equivalent	H	24	1500					1200	930	750	610	510	—	—
		A	16	1000					800	620	500	410	340	—	—
		B	8	500					400	310	250	200	170	—	—
		(Motor rotation speed)		(3750 rpm)					(3000 rpm)	(2325 rpm)	(1875 rpm)	(1537 rpm)	(1275 rpm)	—	—
LEFS40	400 W equivalent	H	30	—	1500					1410	1140	930	780	500	500
		A	20	—	1000					940	760	620	520	440	380
		B	10	—	500					470	380	310	260	220	190
		(Motor rotation speed)		—	(3000 rpm)					(2820 rpm)	(2280 rpm)	(1860 rpm)	(1560 rpm)	(1320 rpm)	(1140 rpm)

Static Allowable Moment∗1

[N·m]

Model	Size	Pitching	Yawing	Rolling
LEF□	**16**	10	10	20
	25	27	27	52
	32	46	46	101
	40	110	110	207

∗1 The static allowable moment is the amount of static moment which can be applied to the actuator when it is stopped.
If the product is exposed to impact or repeated load, be sure to take adequate safety measures when using the product.

Work Load–Acceleration/Deceleration Graph (Guide)

LEFS□25□H/Ball Screw Drive

Horizontal

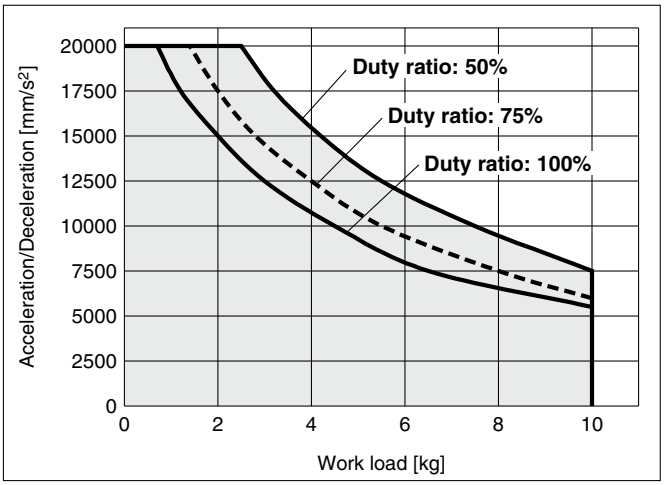

LEFS□25□H/Ball Screw Drive

Vertical

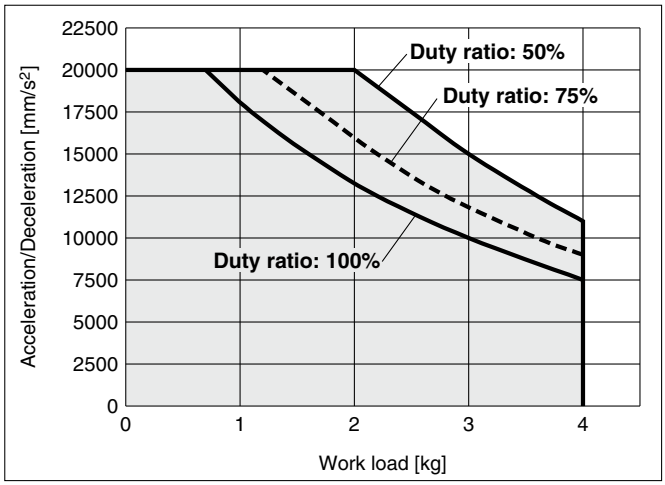

LEFS□25□A/Ball Screw Drive

Horizontal

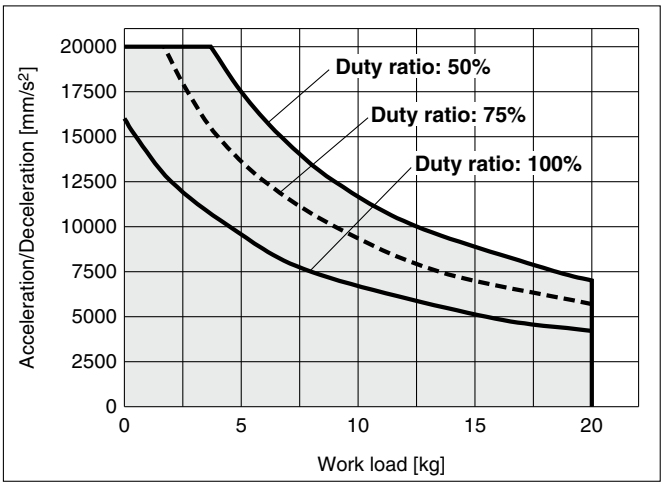

LEFS□25□A/Ball Screw Drive

Vertical

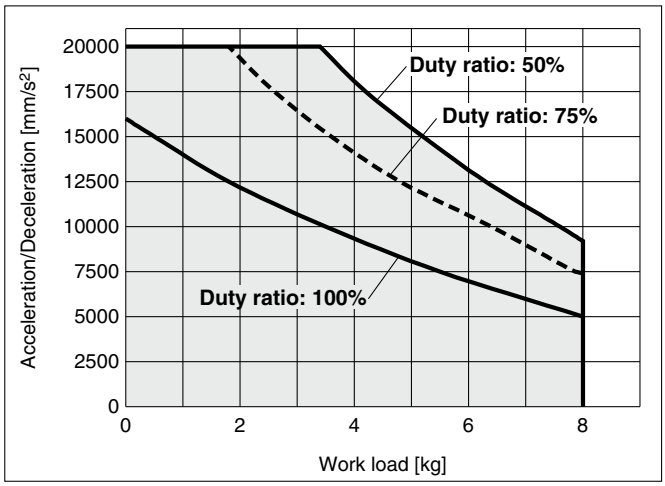

LEFS□25□B/Ball Screw Drive

Horizontal

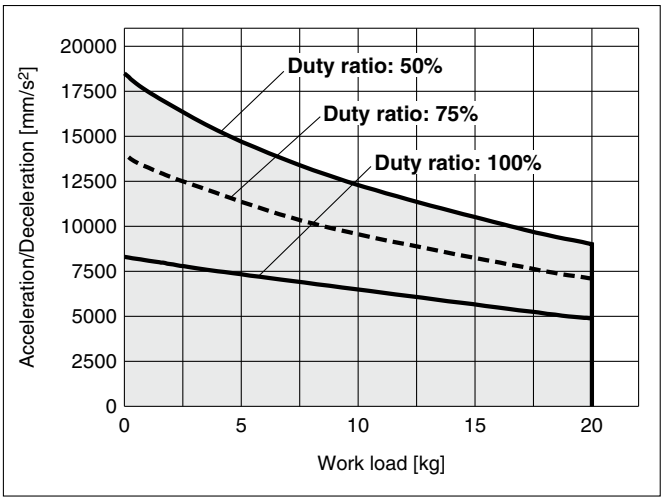

LEFS□25□B/Ball Screw Drive

Vertical

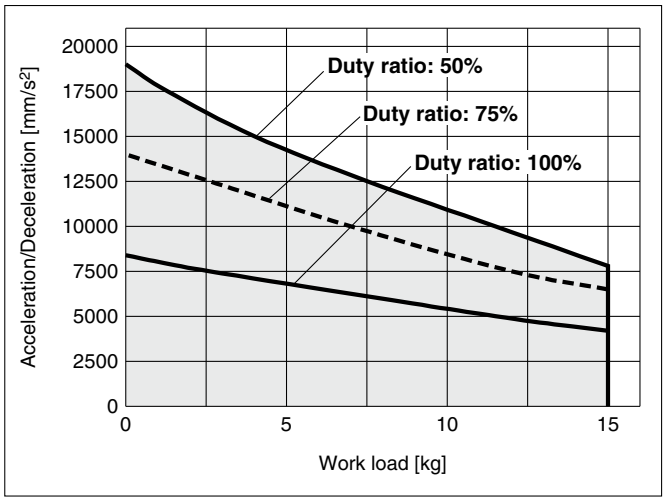

Work Load–Acceleration/Deceleration Graph (Guide)

LEFS□32□H/Ball Screw Drive

Horizontal

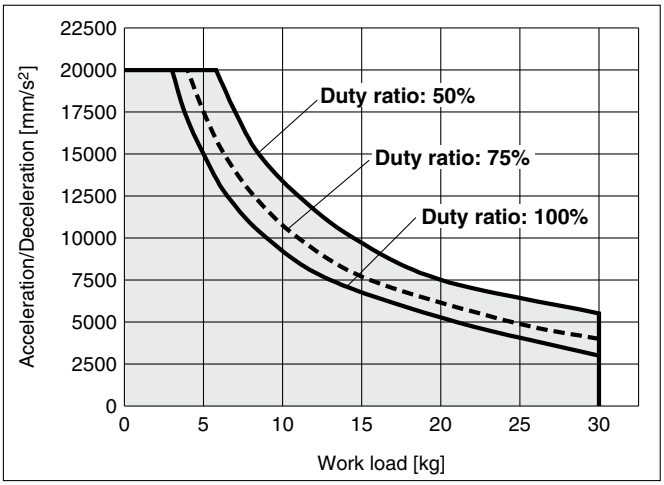

LEFS□32□H/Ball Screw Drive

Vertical

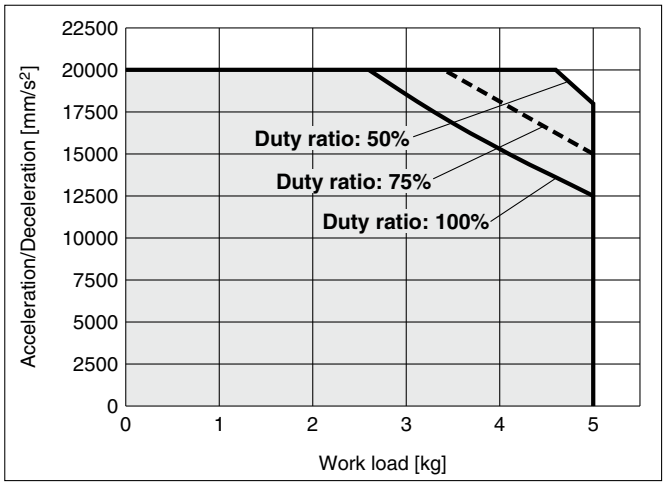

LEFS□32□A/Ball Screw Drive

Horizontal

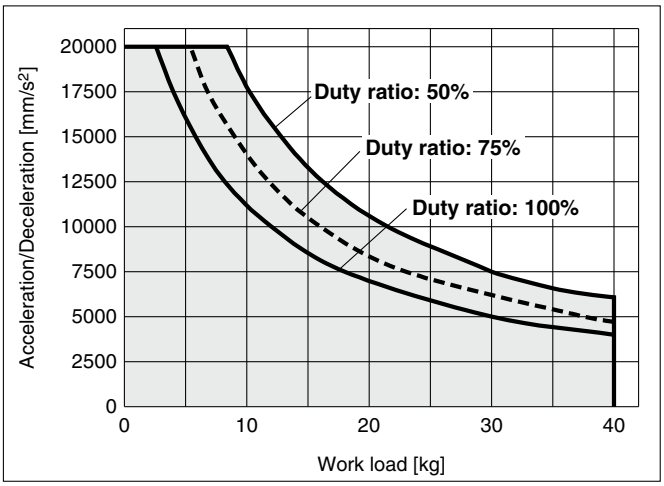

LEFS□32□A/Ball Screw Drive

Vertical

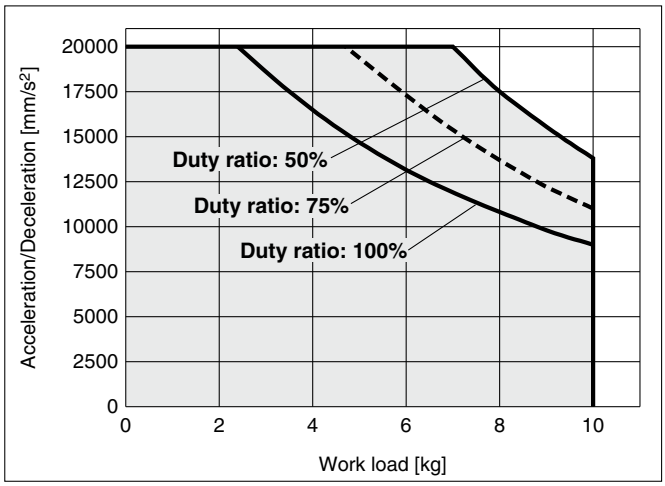

LEFS□32□B/Ball Screw Drive

Horizontal

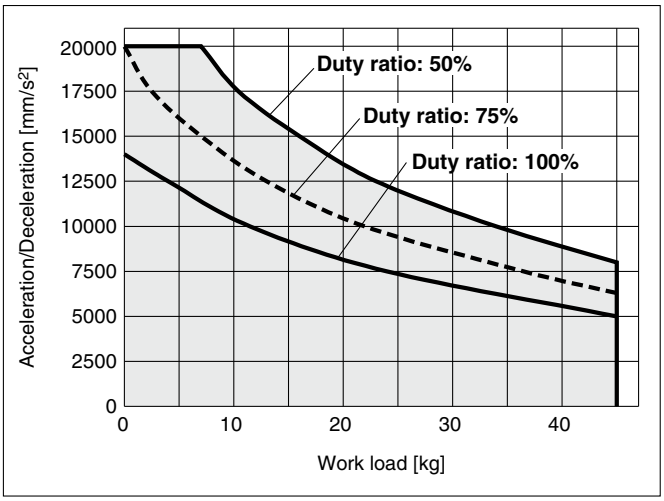

LEFS□32□B/Ball Screw Drive

Vertical

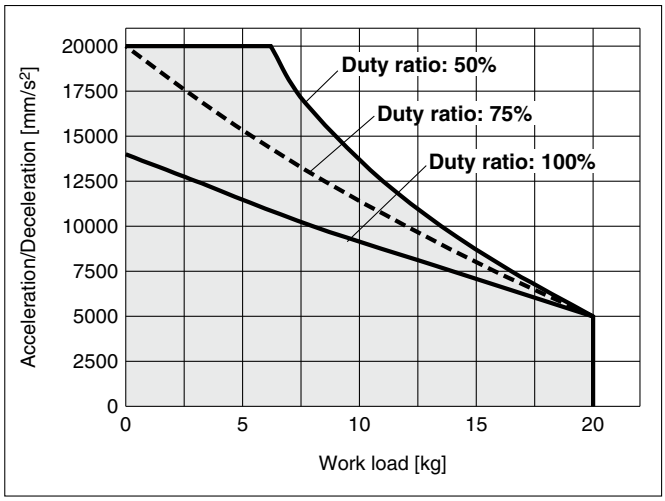

Work Load–Acceleration/Deceleration Graph (Guide)

LEFS□40□H/Ball Screw Drive

Horizontal

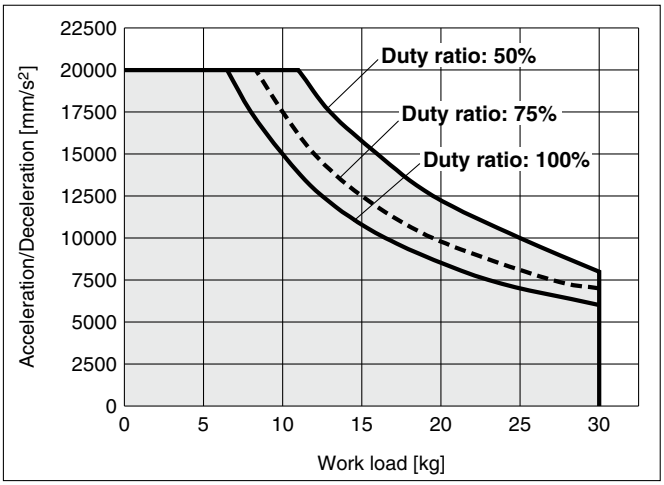

LEFS□40□H/Ball Screw Drive

Vertical

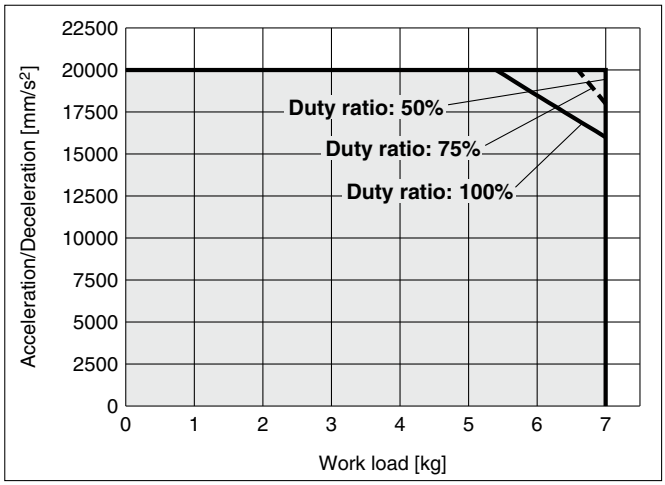

LEFS□40□A/Ball Screw Drive

Horizontal

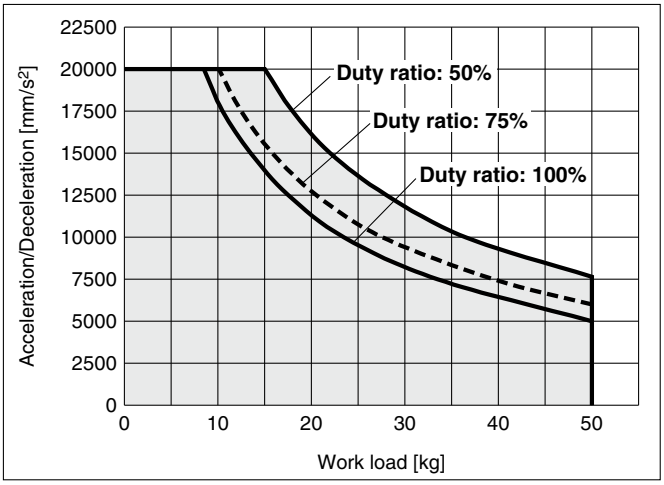

LEFS□40□A/Ball Screw Drive

Vertical

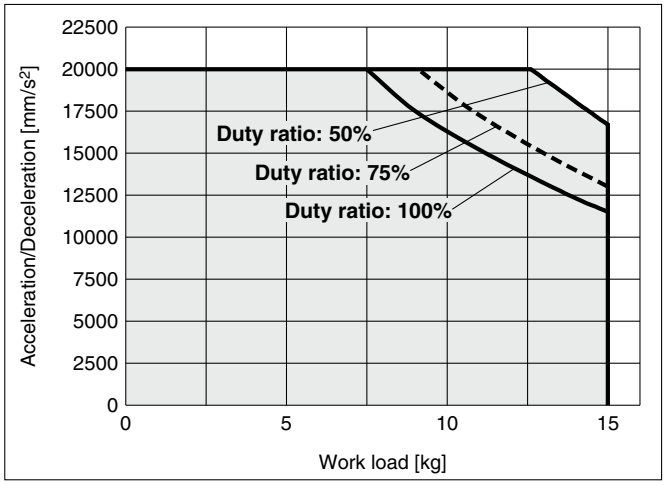

LEFS□40□B/Ball Screw Drive

Horizontal

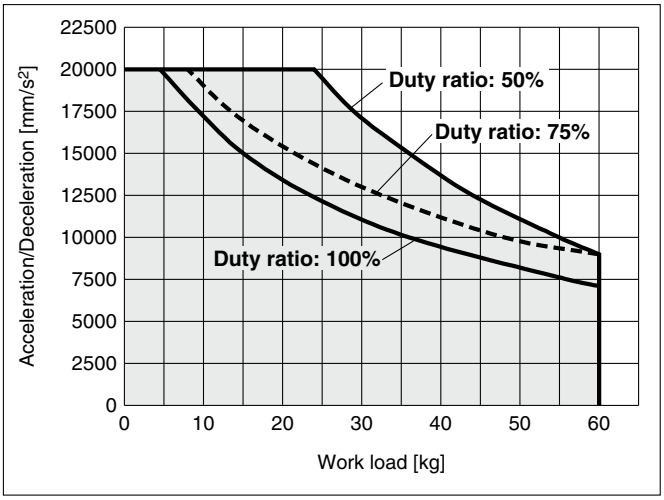

LEFS□40□B/Ball Screw Drive

Vertical

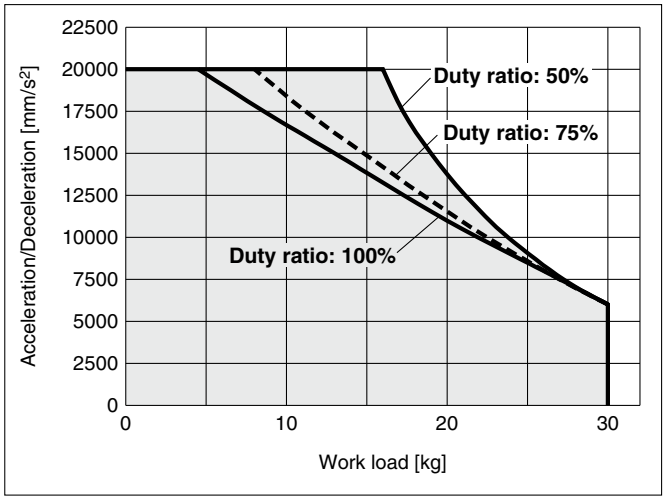

These graphs are examples of when the standard motor is mounted.
Determine the duty ratio after taking into account the load factor of the motor or driver to be used.

Dynamic Allowable Moment

∗ These graphs show the amount of allowable overhang (guide unit) when the center of gravity of the workpiece overhangs in one direction. When selecting the overhang, refer to the "Calculation of Guide Load Factor" or the Electric Actuator Model Selection Software for confirmation: https://www.smcworld.com

Acceleration/Deceleration ——— 1000 mm/s² — — — 3000 mm/s² ····· 5000 mm/s² –·–·– 10000 mm/s² - - - - 20000 mm/s²

Orientation	Load overhanging direction **m** : Work load [kg] **Me**: Allowable moment [N·m] **L** : Overhang to the work load center of gravity [mm]		Model		
			LEFS25□	**LEFS32□**	**LEFS40□**
Horizontal/Bottom	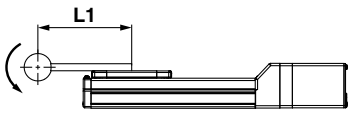	X	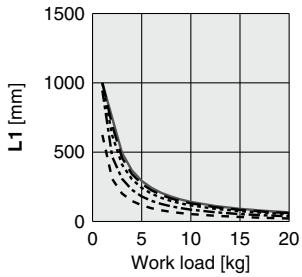	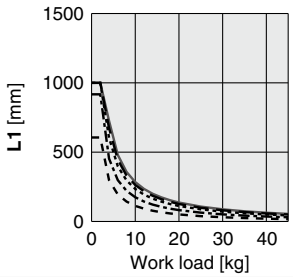	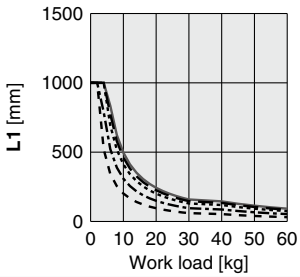
	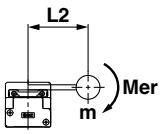	Y	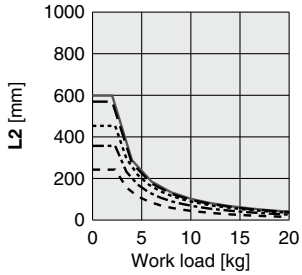	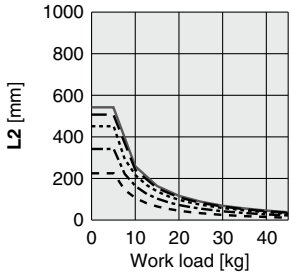	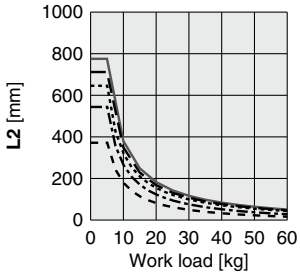
	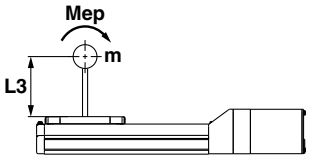	Z	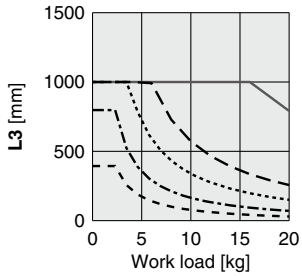	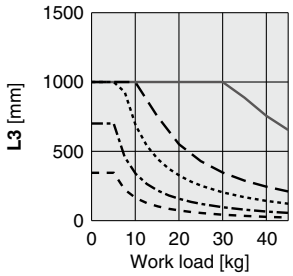	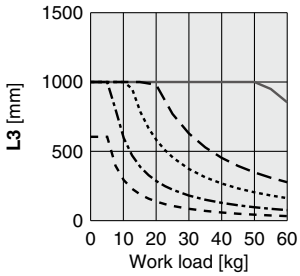
Wall	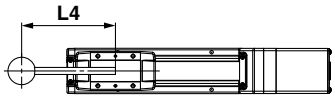	X	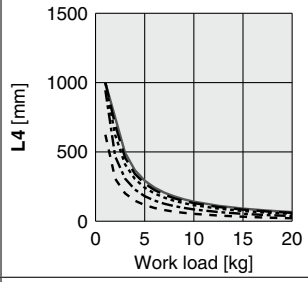	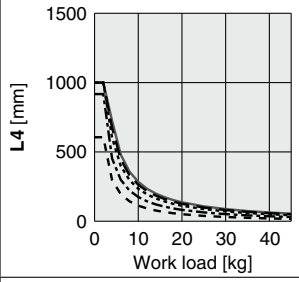	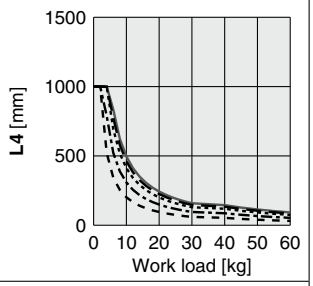
	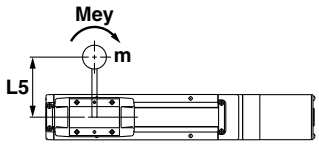	Y	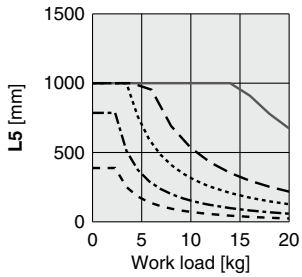	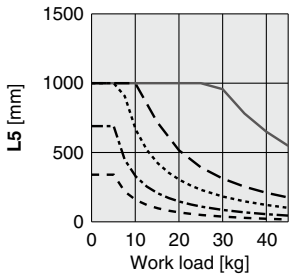	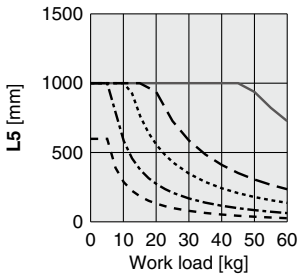
	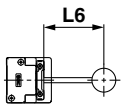	Z	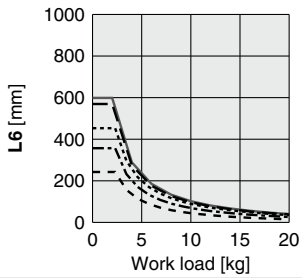	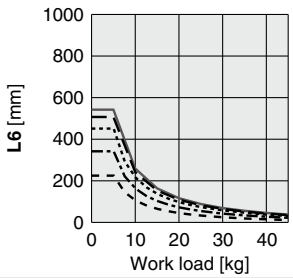	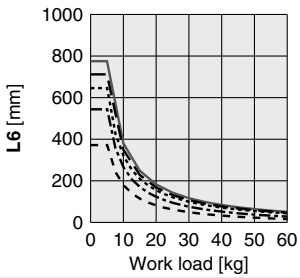

Dynamic Allowable Moment

∗ These graphs show the amount of allowable overhang (guide unit) when the center of gravity of the workpiece overhangs in one direction. When selecting the overhang, refer to the "Calculation of Guide Load Factor" or the Electric Actuator Model Selection Software for confirmation: https://www.smcworld.com

Acceleration/Deceleration ——— 1000 mm/s² — — — 3000 mm/s² ····· 5000 mm/s² —·—·— 10000 mm/s² - - - - 20000 mm/s²

Orientation	Load overhanging direction **m** : Work load [kg] **Me**: Allowable moment [N·m] **L** : Overhang to the work load center of gravity [mm]		Model		
			LEFS25□	**LEFS32□**	**LEFS40□**
Vertical	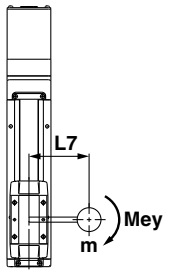	**Y**	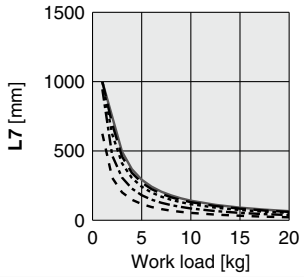	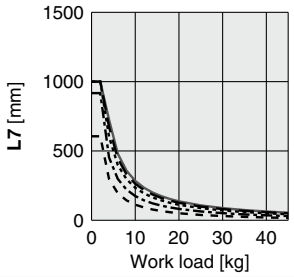	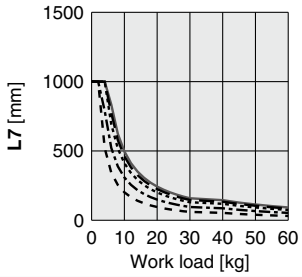
	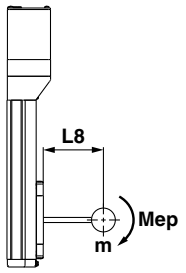	**Z**	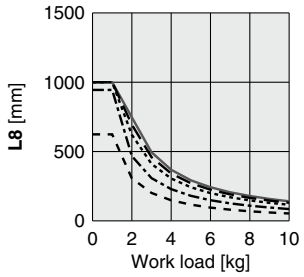	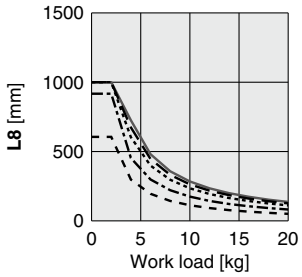	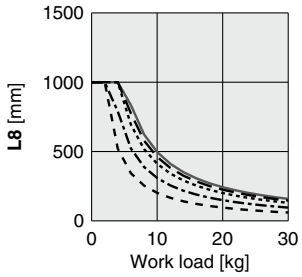

Calculation of Guide Load Factor

1. Decide operating conditions.
   Model: LEFS
   Size: 25/32/40
   Mounting orientation: Horizontal/Bottom/Wall/Vertical
   Acceleration [mm/s²]: **a**
   Work load [kg]: **m**
   Work load center position [mm]: **Xc/Yc/Zc**
2. Select the target graph while referencing the model, size, and mounting orientation.
3. Based on the acceleration and work load, find the overhang [mm]: **Lx/Ly/Lz** from the graph.
4. Calculate the load factor for each direction.
   $\alpha x = Xc/Lx$, $\alpha y = Yc/Ly$, $\alpha z = Zc/Lz$
5. Confirm the total of αx, αy, and αz is 1 or less.
   $\alpha x + \alpha y + \alpha z \leq 1$
   When 1 is exceeded, consider a reduction of acceleration and work load, or a change of the work load center position and series.

Mounting Orientation

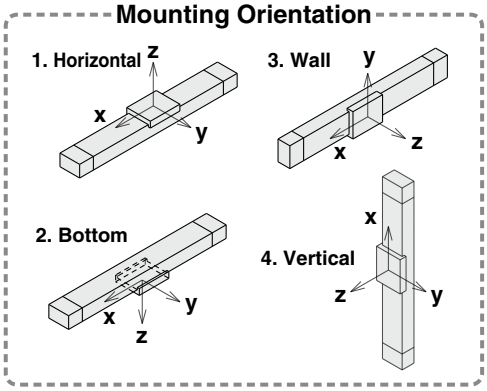

Example

1. Operating conditions
   Model: LEFS40
   Size: 40
   Mounting orientation: Horizontal
   Acceleration [mm/s²]: 3000
   Work load [kg]: 20
   Work load center position [mm]: **Xc = 0**, **Yc = 50**, **Zc = 200**
2. Select the graphs for horizontal of the LEFS40□ on page 42.
3. **Lx = 250 mm**, **Ly = 180 mm**, **Lz = 1000 mm**
4. The load factor for each direction can be found as follows.
   $\alpha x = 0/250 = 0$
   $\alpha y = 50/180 = 0.27$
   $\alpha z = 200/1000 = 0.2$
5. $\alpha x + \alpha y + \alpha z = 0.47 \leq 1$

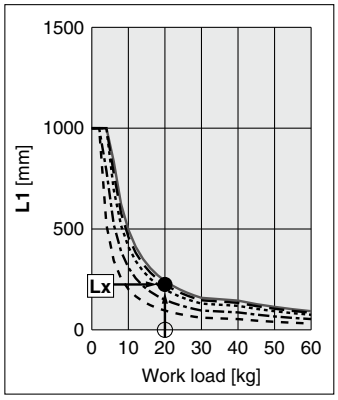

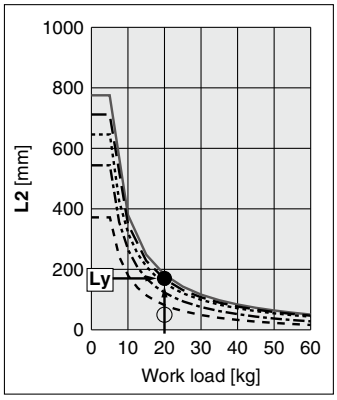

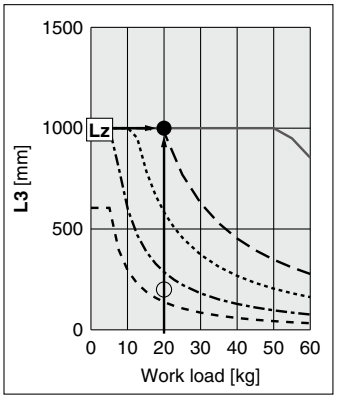

Table Accuracy (Reference Value)

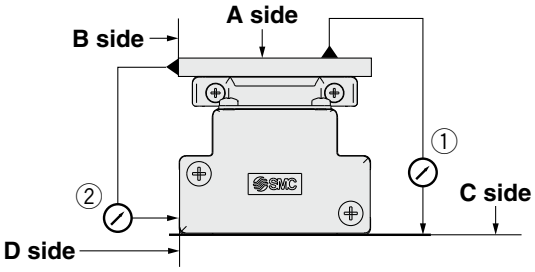

Model	Traveling parallelism [mm] (Every 300 mm)	
	① C side traveling parallelism to A side	② D side traveling parallelism to B side
LEFS25	0.05	0.03
LEFS32	0.05	0.03
LEFS40	0.05	0.03

∗ Traveling parallelism does not include the mounting surface accuracy.

Table Displacement (Reference Value)

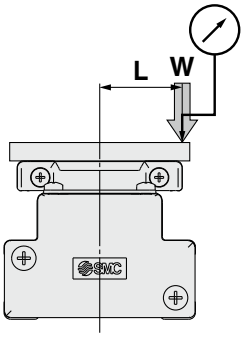

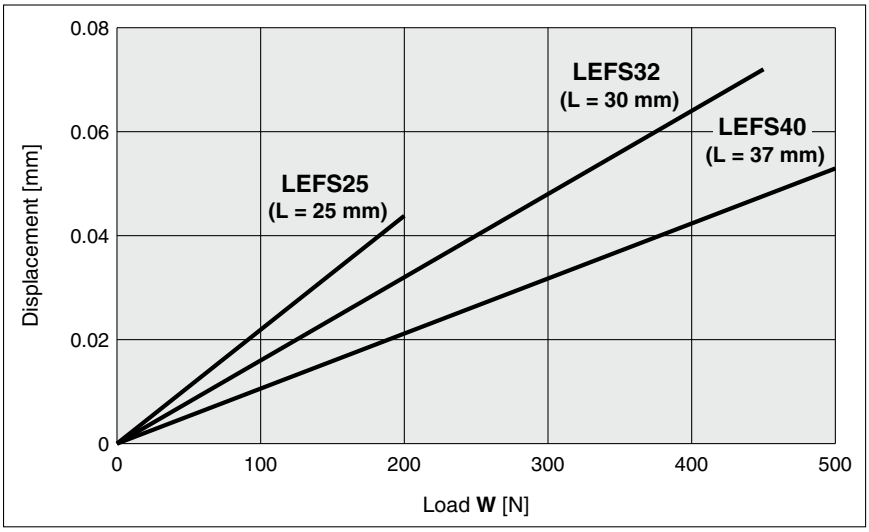

∗ This displacement is measured when a 15 mm aluminum plate is mounted and fixed on the table.
∗ Check the clearance and play of the guide separately.

Overhang Displacement Due to Table Clearance (Initial Reference Value)

Basic Type

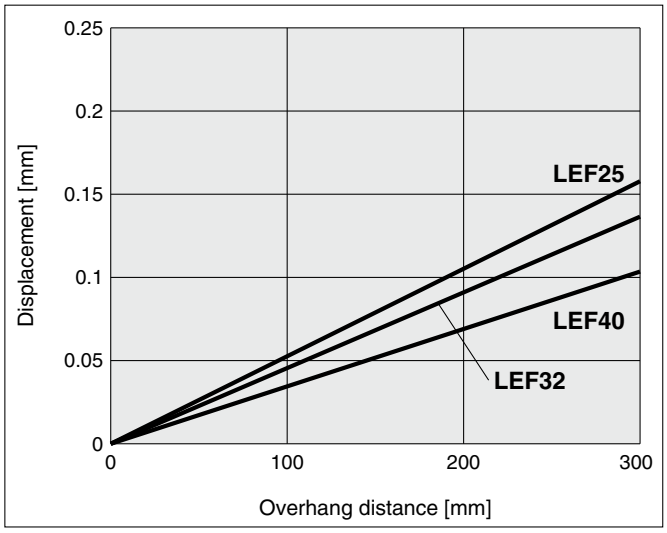

High-Precision Type

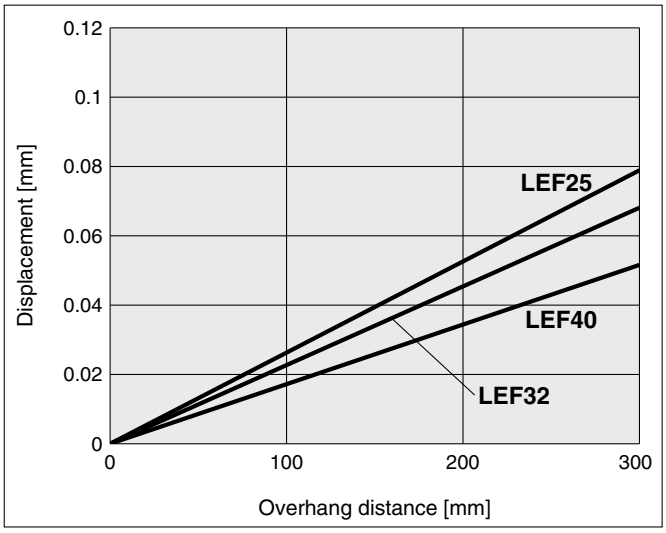

Motorless Type

Electric Actuator/Slider Type Ball Screw Drive

LEFS Series LEFS25, 32, 40

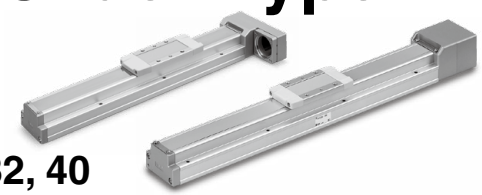

RoHS

How to Order

LEFS H 25 R NZ A – 100 C N K

❶ ❷ ❸ ❹ ❺ ❻ ❼ ❽ ❾

❶ Accuracy

Nil	Basic type
H	High-precision type

❷ Size

25
32
40

❸ Motor mounting position

Nil	In-line
R	Right side parallel
L	Left side parallel

❹ Mounting type

NZ	NV	NM2
NY	NU	NM3
NX	NT	
NW	NM1	

❺ Lead [mm]

Symbol	LEFS25	LEFS32	LEFS40
H	20	24	30
A	12	16	20
B	6	8	10

❻ Stroke [mm]

50	50
to	to
1200	1200

∗ Refer to the applicable stroke table.

❼ Auto switch compatibility

Nil	None
C	With (Includes 1 mounting bracket)

∗ If 2 or more are required, please order them separately. (Part no.: LEF-D-2-1 For details, refer to page 86.)
∗ Order auto switches separately. (For details, refer to pages 87 to 89.)
∗ When "Nil" is selected, the product will not come with a built-in magnet for an auto switch, and so a mounting bracket cannot be secured. Be sure to select an appropriate model initially as the product cannot be changed to have auto switch compatibility after purchase.

❽ Grease application (Seal band part)

Nil	With
N	Without (Roller specification)

❾ Positioning pin hole

Nil	Housing B bottom∗1	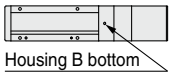
K	Body bottom 2 locations	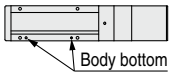

∗1 Refer to the body mounting example on page 91 for the mounting method.

Applicable Stroke Table

●: Standard

Model \ Stroke [mm]	50	100	150	200	250	300	350	400	450	500	550	600	650	700	750	800	850	900	950	1000	1100	1200
LEFS25	●	●	●	●	●	●	●	●	●	●	●	●	●	●	●	●	—	—	—	—	—	—
LEFS32	●	●	●	●	●	●	●	●	●	●	●	●	●	●	●	●	●	●	●	●	—	—
LEFS40	—	—	●	●	●	●	●	●	●	●	●	●	●	●	●	●	●	●	●	●	●	●

∗ Please contact SMC for non-standard strokes as they are produced as special orders.

Compatible Motors and Mounting Types∗5

Applicable motor model		Size/Mounting type														
		25						32/40								
Manufacturer	Series	NZ	NY	NX	NM1	NM2	NM3	NZ	NY	NX	NW	NV	NU	NT	NM1	NM2
Mitsubishi Electric Corporation	MELSERVO JN/J4/J5	●	—	—	—	—	—	●	—	—	—	—	—	—	—	—
YASKAWA Electric Corporation	Σ-V/7/X	●∗4	—	—	—	—	—	●	—	—	—	—	—	—	—	—
SANYO DENKI CO., LTD.	SANMOTION R	●	—	—	—	—	—	●	—	—	—	—	—	—	—	—
OMRON Corporation	OMNUC G5/1S	●	—	—	—	—	—	—	●	—	—	—	—	—	—	—
Panasonic Corporation	MINAS A5/A6	● (MHMF only)	●	—	—	—	—	—	●	—	—	—	—	—	—	—
FANUC CORPORATION	βis (-B)	●	—	—	—	—	—	● (β1 only)	—	—	●	—	—	—	—	—
NIDEC SANKYO CORPORATION	S-FLAG	●	—	—	—	—	—	●	—	—	—	—	—	—	—	—
KEYENCE CORPORATION	SV/SV2	●∗4	—	—	—	—	—	●	—	—	—	—	—	—	—	—
FUJI ELECTRIC CO., LTD.	ALPHA7	●	—	—	—	—	—	●	—	—	—	—	—	—	—	—
MinebeaMitsumi Inc.	Hybrid stepping motors	—	—	—	●∗1	—	●∗3	—	—	—	—	—	—	—	●∗2	—
Shinano Kenshi Co., Ltd.	CSB-BZ	—	—	—	●∗1	—	●∗3	—	—	—	—	—	—	—	—	—
ORIENTAL MOTOR Co., Ltd.	α STEP AR/AZ	—	—	—	—	● (46 only)	—	—	—	—	—	—	—	—	—	●∗2
FASTECH Co., Ltd.	Ezi-SERVO	—	—	—	●	—	—	—	—	—	—	—	—	—	●∗2	—
Rockwell Automation, Inc. (Allen-Bradley)	Kinetix MP/VP/TL	● (TL only)	—	—	—	—	—	—	—	●∗1 (MP/VP only)	—	—	—	● (TL only)	—	—
Beckhoff Automation GmbH	AM 30/31/80/81	●	—	—	—	—	—	—	—	●∗1 (80/81 only)	—	●∗1 (30 only)	●∗2 (31 only)	—	—	—
Siemens AG	SIMOTICS S-1FK7	—	—	●	—	—	—	—	—	●∗1	—	—	—	—	—	—
Delta Electronics, Inc.	ASDA-A2	●	—	—	—	—	—	●	—	—	—	—	—	—	—	—
ANCA Motion	AMD2000	●	—	—	—	—	—	●	—	—	—	—	—	—	—	—

∗1 Motor mounting position: In-line only ∗2 Only size 32 is available when the motor mounting position is right (or left) side parallel. ∗3 Motor mounting position: Right (or left) side parallel only
∗4 For some motors, the connector may protrude from the motor body. Be sure to check for interference with the mounting surface before selecting a motor.
∗5 The compatible motors and mounting types are typical examples. Select the mounting type after referring to the "Motor Mounting, Applicable Motor Dimensions" tables on the following "Dimensions" pages.

Specifications*2

- Values in this specifications table are the allowable values of the actuator body with the standard motor mounted.
- Do not use the actuator so that it exceeds these values.

Model			LEFS25			LEFS32			LEFS40		
Actuator specifications	Stroke [mm]*1		50 to 800			50 to 1000			150 to 1200		
	Work load [kg]	Horizontal	10	20	20	30	40	45	30	50	60
		Vertical	4	8	15	5	10	20	7	15	30
	Speed [mm/s]	Stroke range: Up to 400	1500	900	450	1500	1000	500	1500	1000	500
		401 to 500	1200	720	360	1500	1000	500	1500	1000	500
		501 to 600	900	540	270	1200	800	400	1500	1000	500
		601 to 700	700	420	210	930	620	310	1410	940	470
		701 to 800	550	330	160	750	500	250	1140	760	380
		801 to 900	—	—	—	610	410	200	930	620	310
		901 to 1000	—	—	—	510	340	170	780	520	260
		1001 to 1100	—	—	—	—	—	—	500	440	220
		1101 to 1200	—	—	—	—	—	—	500	380	190
	Pushing return to origin speed [mm/s]		30 or less								
	Positioning repeatability [mm]	Basic type	±0.02								
		High-precision type	±0.01								
	Lost motion*3 [mm]	Basic type	0.1 or less								
		High-precision type	0.05 or less								
	Ball screw specifications	Thread size [mm]	ø10			ø12			ø15		
		Lead [mm]	20	12	6	24	16	8	30	20	10
		Shaft length [mm]	Stroke + 150			Stroke + 185			Stroke + 235		
	Max. acceleration/deceleration [mm/s²]		20000*4								
	Impact/Vibration resistance [m/s²]*6		50/20								
	Actuation type		Ball screw (LEFS□), Ball screw + Belt (LEFS□$^{R}_{L}$)								
	Guide type		Linear guide								
	Static allowable moment*7 [N·m]	Mep (Pitching)	27			46			110		
		Mey (Yawing)	27			46			110		
		Mer (Rolling)	52			101			207		
	Operating temperature range [°C]		5 to 40								
	Operating humidity range [%RH]		90 or less (No condensation)								
	Enclosure		IP30 (Excludes motor mounting part)								
Other specifications*5	Actuation unit weight [kg]		0.2			0.3			0.55		
	Other inertia [kg·cm²]		0.02 (LEFS25) 0.02 (LEFS25$^{R}_{L}$)			0.08 (LEFS32) 0.06 (LEFS32$^{R}_{L}$)			0.08 (LEFS40) 0.17 (LEFS40$^{R}_{L}$)		
	Friction coefficient		0.05								
	Mechanical efficiency		0.8								
Reference motor specifications*8	Motor type		AC servo motor (100 V/200 V)								
	Rated output capacity [W]		100			200			400		
	Rated torque [N·m]		0.32			0.64			1.3		

*1 Please contact SMC for non-standard strokes as they are produced as special orders.
*2 Do not allow collisions at either end of the table traveling distance at a speed exceeding "pushing return to origin speed."
Additionally, when running the positioning operation, do not set within 2 mm of both ends.
*3 A reference value for correcting errors in reciprocal operation
*4 Maximum acceleration/deceleration changes according to the work load.
Refer to the "Work Load–Acceleration/Deceleration Graph (Guide)" for ball screw drive on pages 39 to 41.
*5 Each value is only to be used as a guide to select a motor of the appropriate capacity.
*6 Impact resistance: No malfunction occurred when the actuator was tested with a drop tester in both an axial direction and a perpendicular direction to the lead screw. (The test was performed with the actuator in the initial state.)
Vibration resistance: No malfunction occurred in a test ranging between 45 to 2000 Hz. The test was performed in both an axial direction and a perpendicular direction to the lead screw. (The test was performed with the actuator in the initial state.)
*7 The static allowable moment is the amount of static moment which can be applied to the actuator when it is stopped.
If the product is exposed to impact or repeated load, be sure to take adequate safety measures when using the product.
*8 For other specifications, refer to the specifications of the motor that is to be installed.

Weight

Model	LEFS25															
Stroke [mm]	50	100	150	200	250	300	350	400	450	500	550	600	650	700	750	800
Product weight [kg]	1.50	1.70	1.80	2.00	2.10	2.25	2.40	2.55	2.70	2.80	2.90	3.10	3.35	3.50	3.65	3.80

Model	LEFS32																			
Stroke [mm]	50	100	150	200	250	300	350	400	450	500	550	600	650	700	750	800	850	900	950	1000
Product weight [kg]	2.40	2.60	2.80	3.00	3.20	3.40	3.60	3.80	4.00	4.20	4.40	4.60	4.80	5.00	5.20	5.40	5.60	5.80	6.00	6.20

Model	LEFS40																			
Stroke [mm]	150	200	250	300	350	400	450	500	550	600	650	700	750	800	850	900	950	1000	1100	1200
Product weight [kg]	4.60	4.80	5.20	5.35	5.70	5.95	6.30	6.50	6.80	6.95	7.40	7.60	8.00	8.15	8.50	8.75	9.10	9.30	9.76	10.32

Refer to the "Motor Mounting" on page 59 for details about motor mounting and included parts.

Dimensions: Ball Screw Drive

LEFS25

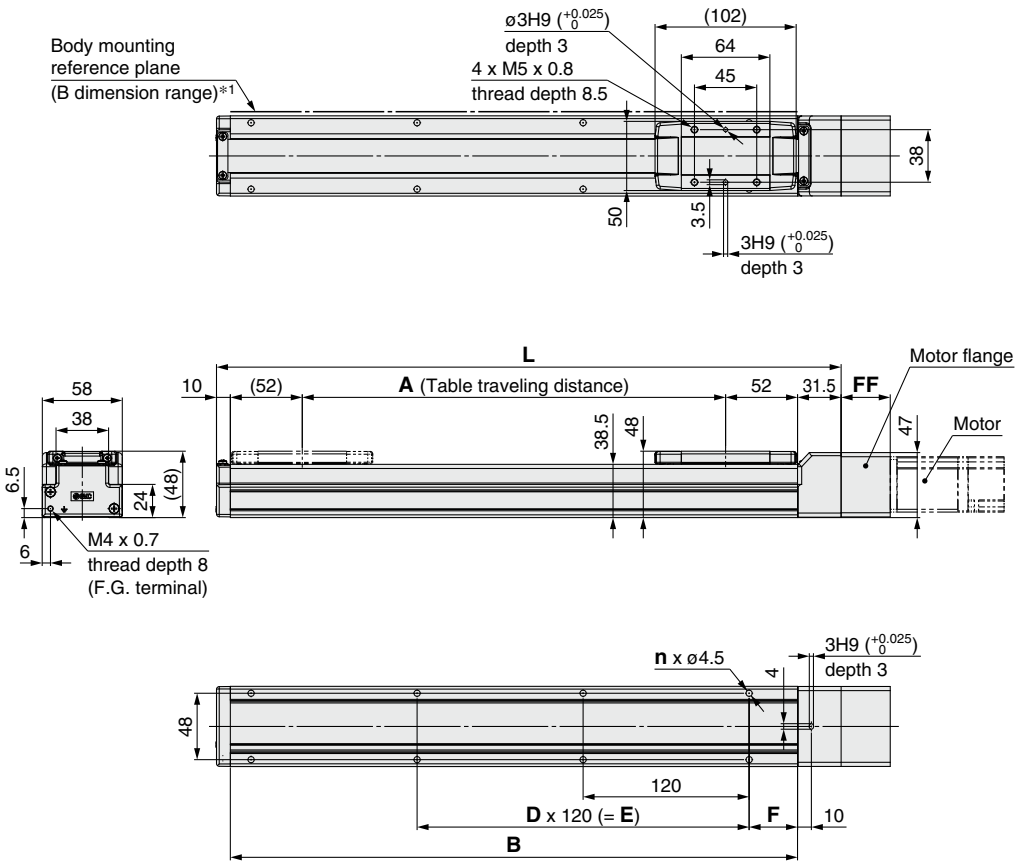

Mounting type: NZ, NY, NX

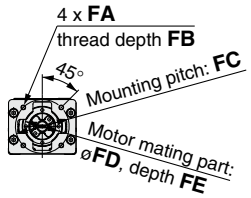

Mounting type: NM1, NM2

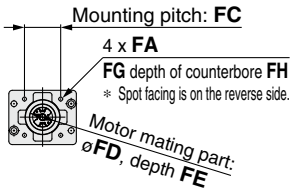

Applicable motor dimensions

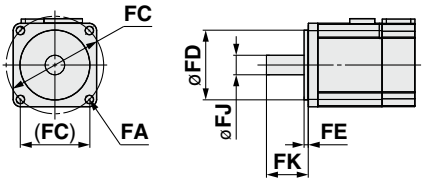

*1 When mounting the actuator using the body mounting reference plane, set the height of the opposite surface or pin to be 3 mm or more. (Recommended height: 5 mm)

Dimensions

[mm]

Stroke	L	A	B	n	D	E	F
50	201.5	56	160	4	—	—	20
100	251.5	106	210	4	—	—	35
150	301.5	156	260	4	—	—	35
200	351.5	206	310	6	2	240	35
250	401.5	256	360	6	2	240	35
300	451.5	306	410	8	3	360	35
350	501.5	356	460	8	3	360	35
400	551.5	406	510	8	3	360	35
450	601.5	456	560	10	4	480	35
500	651.5	506	610	10	4	480	35
550	701.5	556	660	12	5	600	35
600	751.5	606	710	12	5	600	35
650	801.5	656	760	12	5	600	35
700	851.5	706	810	14	6	720	35
750	901.5	756	860	14	6	720	35
800	951.5	806	910	16	7	840	35

Motor Mounting, Applicable Motor Dimensions

[mm]

Mounting type	FA		FB	FC	FD	FE (Max.)	FF	FG	FH	FJ	FK
	Mounting type	Applicable motor									
NZ	M4 x 0.7	ø4.5	8	ø46	30	3.5	35.5	—	—	8	25 ±1
NY	M3 x 0.5	ø3.4	8	ø45	30	3.5	35.5	—	—	8	25 ±1
NX	M4 x 0.7	ø4.5	8	ø46	30	3.5	35.5	—	—	8	18 ±1
NM1	ø3.4	M3	—	□31	22*1	2.5*1	24	6.5	13.5	5*2	18 to 25
NM2	ø3.4	M3	—	□31	22*1	2.5*1	33.1	6.5	22.6	6	20 ±1

*1 Dimensions after mounting a ring spacer (Refer to page 59.)
*2 Shaft type: D-cut shaft

Refer to the "Motor Mounting" on page 59 for details about motor mounting and included parts.

Dimensions: Ball Screw Drive

LEFS25

Positioning pin hole*1 (Option): Body bottom

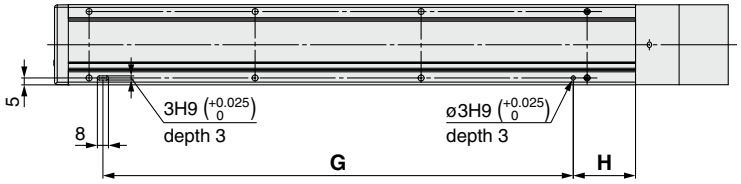

*1 When using the body bottom positioning pin holes, do not simultaneously use the housing B bottom pin hole.

With auto switch (Option)

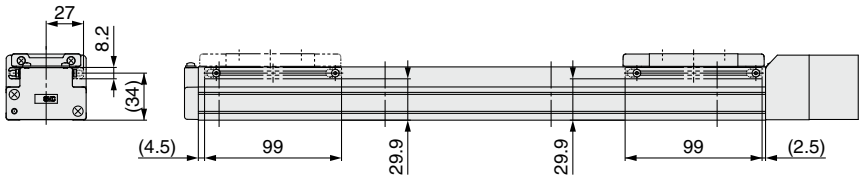

* For strokes of 99 mm or less, only 2 auto switch mounting brackets can be installed on the motor side.

Dimensions [mm]

Stroke	G	H
50	100	30
100	100	45
150	100	45
200	220	45
250	220	45
300	340	45
350	340	45
400	340	45
450	460	45
500	460	45
550	580	45
600	580	45
650	580	45
700	700	45
750	700	45
800	820	45

Refer to the "Motor Mounting" on page 59 for details about motor mounting and included parts.

Dimensions: Ball Screw Drive

LEFS32

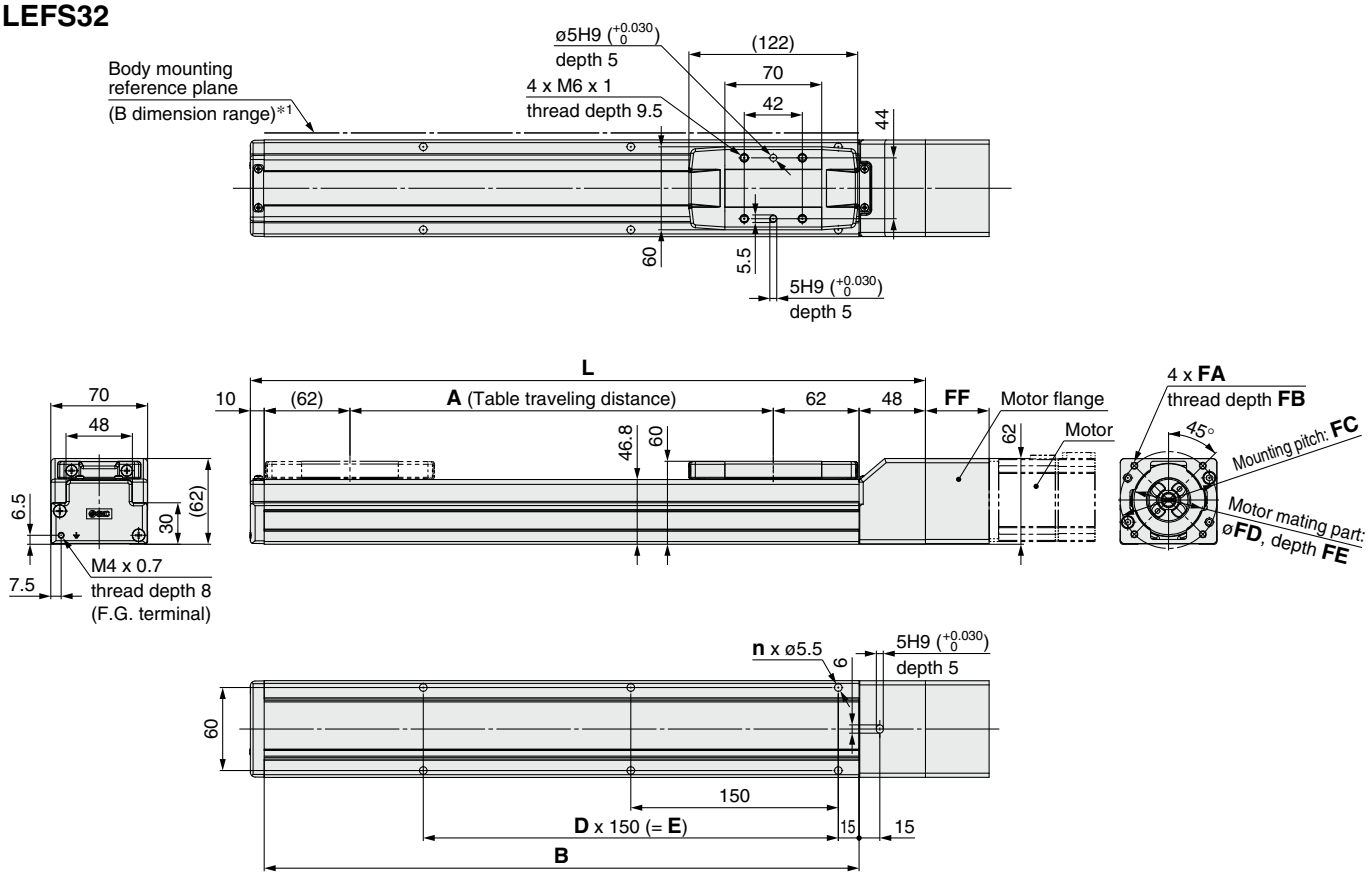

Applicable motor dimensions

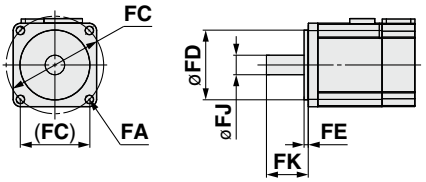

*1 When mounting the actuator using the body mounting reference plane, set the height of the opposite surface or pin to be 3 mm or more. (Recommended height: 5 mm)

Dimensions [mm]

Stroke	L	A	B	n	D	E
50	238	56	180	4	—	—
100	288	106	230	4	—	—
150	338	156	280	4	—	—
200	388	206	330	6	2	300
250	438	256	380	6	2	300
300	488	306	430	6	2	300
350	538	356	480	8	3	450
400	588	406	530	8	3	450
450	638	456	580	8	3	450
500	688	506	630	10	4	600
550	738	556	680	10	4	600
600	788	606	730	10	4	600
650	838	656	780	12	5	750
700	888	706	830	12	5	750
750	938	756	880	12	5	750
800	988	806	930	14	6	900
850	1038	856	980	14	6	900
900	1088	906	1030	14	6	900
950	1138	956	1080	16	7	1050
1000	1188	1006	1130	16	7	1050

Motor Mounting, Applicable Motor Dimensions [mm]

Mounting type	FA		FB	FC	FD	FE (Max.)	FF	FJ	FK
	Mounting type	Applicable motor							
NZ	M5 x 0.8	ø5.8	9	ø70	50	5	46	14	30 ±1
NY	M4 x 0.7	ø4.5	8	ø70	50	5	46	11	30 ±1
NX	M5 x 0.8	ø5.8	9	ø63	40*1	4.5*1	49.7	9	20 ±1
NW	M5 x 0.8	ø5.8	9	ø70	50	5	47.5	9	25 ±1
NV	M4 x 0.7	ø4.5	8	ø63	40*1	4.5*1	49.7	9	20 ±1
NU	M5 x 0.8	ø5.8	9	ø70	50	5	47.5	11	23 ±1
NT	M5 x 0.8	ø5.8	9	ø70	50	5	46	12	30 ±1
NM1	M4 x 0.7	ø4.5	8	□47.14	38.1*1	4.5*1	21	6.35*2	20 ±1
NM2	M4 x 0.7	ø4.5	8	□50	36*1	4.5*1	40.1	10	24 ±1

*1 Dimensions after mounting a ring spacer (Refer to page 59.)
*2 Shaft type: D-cut shaft

Refer to the "Motor Mounting" on page 59 for details about motor mounting and included parts.

Dimensions: Ball Screw Drive

LEFS32

Positioning pin hole*1 (Option): Body bottom

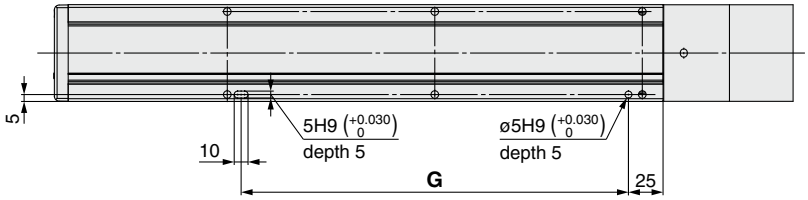

*1 When using the body bottom positioning pin holes, do not simultaneously use the housing B bottom pin hole.

With auto switch (Option)

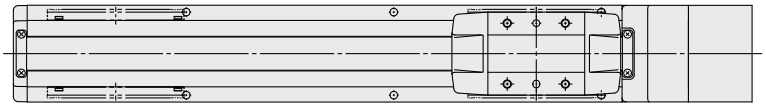

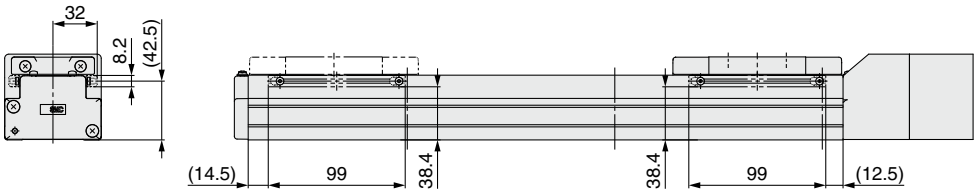

* For strokes of 99 mm or less, only 2 auto switch mounting brackets can be installed on the motor side.

Dimensions [mm]

Stroke	G
50	130
100	130
150	130
200	280
250	280
300	280
350	430
400	430
450	430
500	580
550	580
600	580
650	730
700	730
750	730
800	880
850	880
900	880
950	1030
1000	1030

Refer to the "Motor Mounting" on page 59 for details about motor mounting and included parts.

Dimensions: Ball Screw Drive

LEFS40

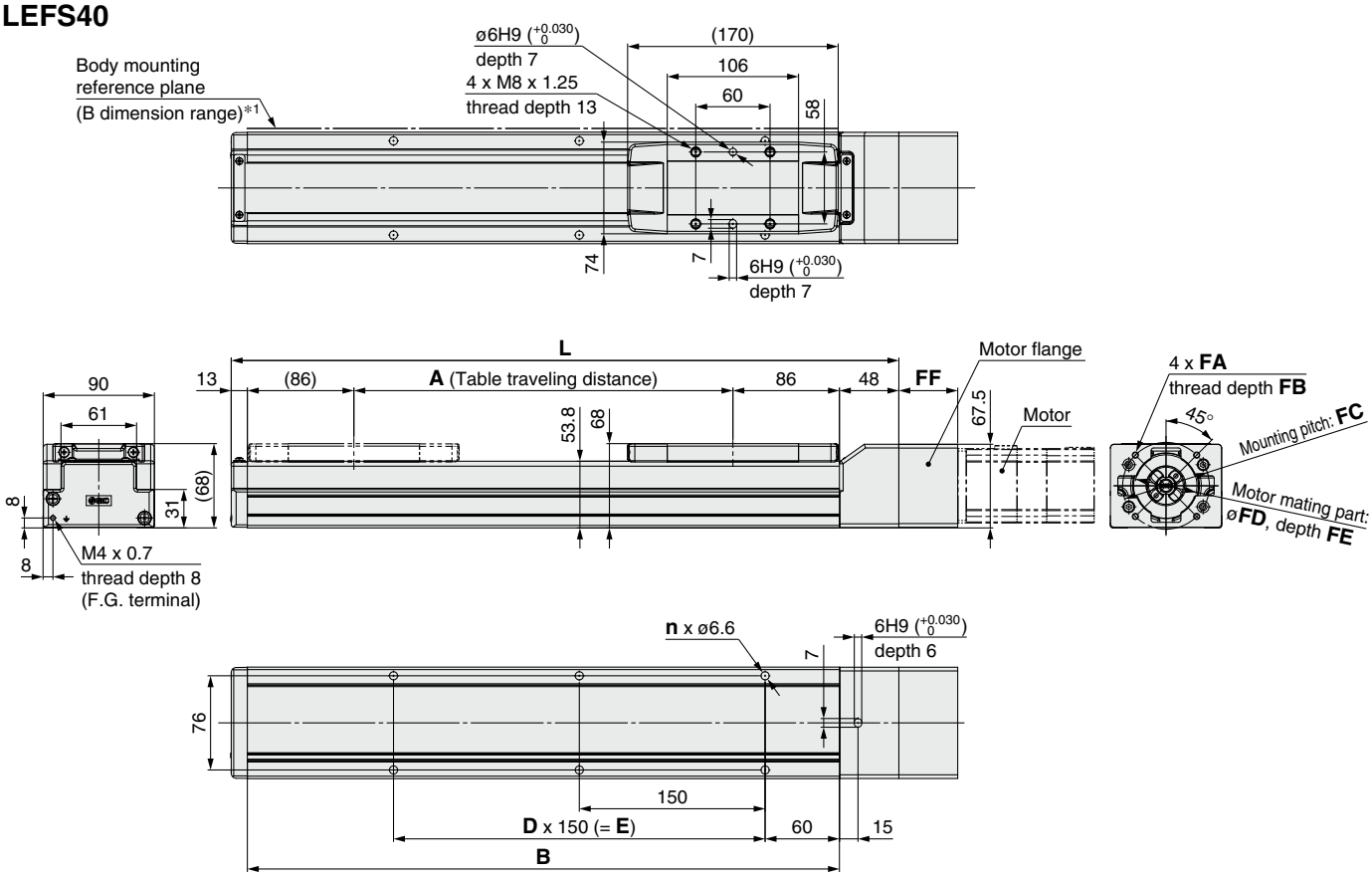

*1 When mounting the actuator using the body mounting reference plane, set the height of the opposite surface or pin to be 3 mm or more. (Recommended height: 5 mm)

Applicable motor dimensions

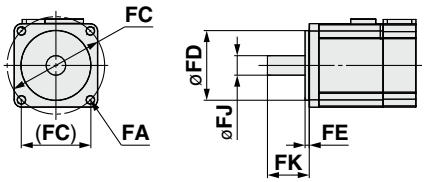

Dimensions

[mm]

Stroke	L	A	B	n	D	E
150	389	156	328	4	—	150
200	439	206	378	6	2	300
250	489	256	428	6	2	300
300	539	306	478	6	2	300
350	589	356	528	8	3	450
400	639	406	578	8	3	450
450	689	456	628	8	3	450
500	739	506	678	10	4	600
550	789	556	728	10	4	600
600	839	606	778	10	4	600
650	889	656	828	12	5	750
700	939	706	878	12	5	750
750	989	756	928	12	5	750
800	1039	806	978	14	6	900
850	1089	856	1028	14	6	900
900	1139	906	1078	14	6	900
950	1189	956	1128	16	7	1050
1000	1239	1006	1178	16	7	1050
1100	1339	1106	1278	18	8	1200
1200	1439	1206	1378	18	8	1200

Motor Mounting, Applicable Motor Dimensions

[mm]

Mounting type	FA		FB	FC	FD	FE (Max.)	FF	FJ	FK
	Mounting type	Applicable motor							
NZ	M5 x 0.8	ø5.8	9	ø70	50	5	47.5	14	30 ±1
NY	M4 x 0.7	ø4.5	8	ø70	50	5	47.5	14	30 ±1
NX	M5 x 0.8	ø5.8	9	ø63	40*1	4.5*1	51	9	20 ±1
NW	M5 x 0.8	ø5.8	9	ø70	50	5	48.8	9	25 ±1
NV	M4 x 0.7	ø4.5	8	ø63	40*1	4.5*1	51	9	20 ±1
NU	M5 x 0.8	ø5.8	9	ø70	50	5	48.8	11	23 ±1
NT	M5 x 0.8	ø5.8	9	ø70	50	5	47.5	12	30 ±1
NM1	M4 x 0.7	ø4.5	8	□47.14	38.1*1	4.5*1	22	6.35*2	20 ±1
NM2	M4 x 0.7	ø4.5	8	□50	36*1	4.5*1	41.4	10	24 ±1

*1 Dimensions after mounting a ring spacer (Refer to page 59.)
*2 Shaft type: D-cut shaft

Refer to the "Motor Mounting" on page 59 for details about motor mounting and included parts.

Dimensions: Ball Screw Drive

LEFS40

Positioning pin hole*1 (Option): Body bottom

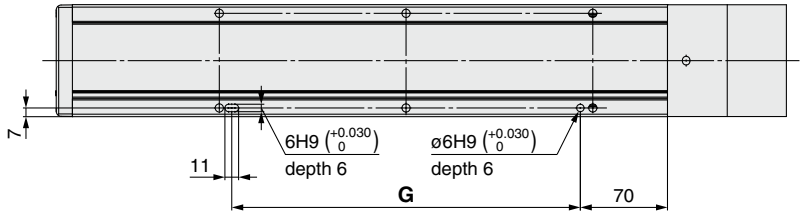

*1 When using the body bottom positioning pin holes, do not simultaneously use the housing B bottom pin hole.

With auto switch (Option)

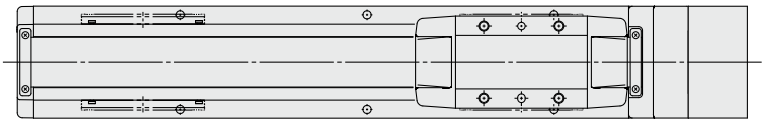

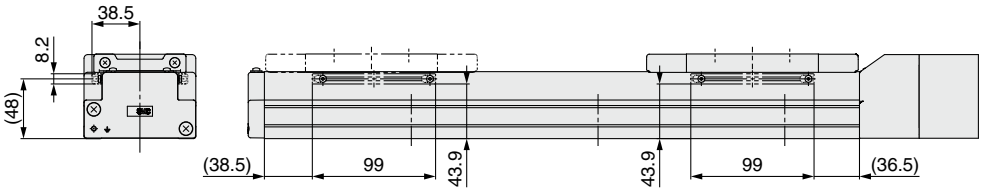

Dimensions [mm]

Stroke	G
150	130
200	280
250	280
300	280
350	430
400	430
450	430
500	580
550	580
600	580
650	730
700	730
750	730
800	880
850	880
900	880
950	1030
1000	1030
1100	1180
1200	1180

Dimensions: Ball Screw Drive

Refer to the "Motor Mounting" on page 60 for details about motor mounting and included parts.

LEFS25R

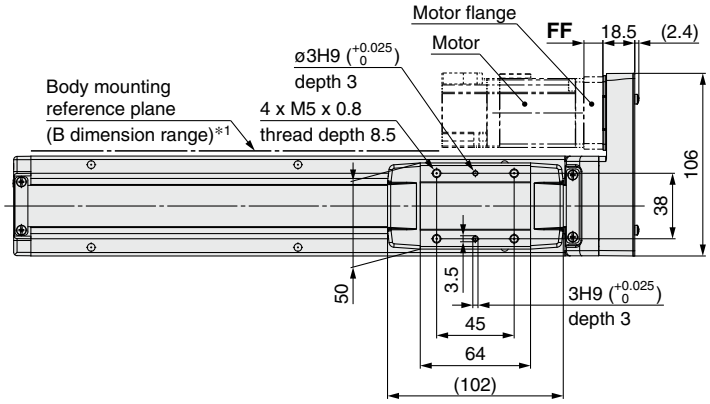

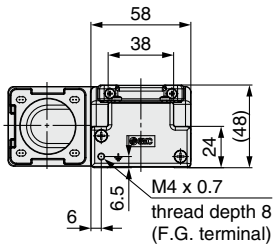

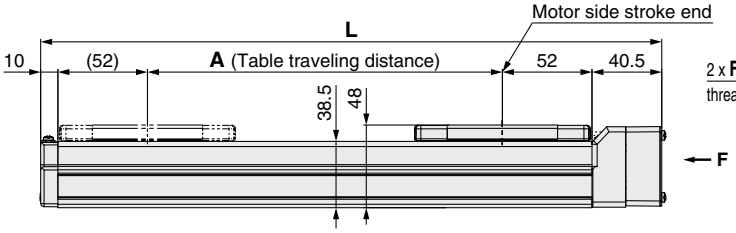

Mounting type: NZ, NY, NX

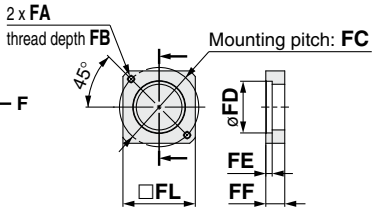

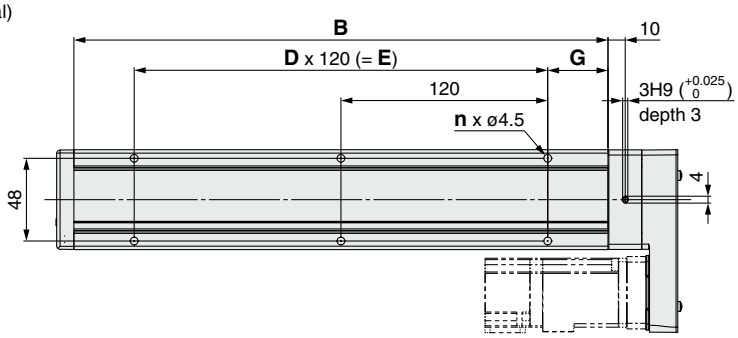

Mounting type: NM1, NM2, NM3

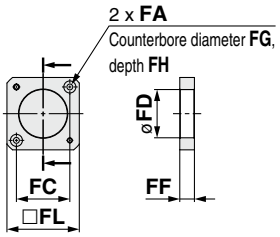

*1 When mounting the actuator using the body mounting reference plane, set the height of the opposite surface or pin to be 3 mm or more. (Recommended height: 5 mm)

Applicable motor dimensions

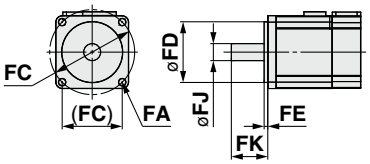

Dimensions

[mm]

Stroke	L	A	B	n	D	E	G
50	210.5	56	160	4	—	—	20
100	260.5	106	210	4	—	—	35
150	310.5	156	260	4	—	—	35
200	360.5	206	310	6	2	240	35
250	410.5	256	360	6	2	240	35
300	460.5	306	410	8	3	360	35
350	510.5	356	460	8	3	360	35
400	560.5	406	510	8	3	360	35
450	610.5	456	560	10	4	480	35
500	660.5	506	610	10	4	480	35
550	710.5	556	660	12	5	600	35
600	760.5	606	710	12	5	600	35
650	810.5	656	760	12	5	600	35
700	860.5	706	810	14	6	720	35
750	910.5	756	860	14	6	720	35
800	960.5	806	910	16	7	840	35

Motor Mounting, Applicable Motor Dimensions

[mm]

Mounting type	FA		FB	FC	FD	FE (Max.)	FF	FG	FH	FJ	FK	FL
	Mounting type	Applicable motor										
NZ	M4 x 0.7	ø4.5	7.5	ø46	30	3.7	11	—	—	8	25 ±1	42
NY	M3 x 0.5	ø3.4	5.5	ø45	30	5	11	—	—	8	25 ±1	38
NX	M4 x 0.7	ø4.5	7	ø46	30	3.7	8	—	—	8	18 ±1	42
NM1	ø3.4	M3	—	□31	28	—	8.5	7	3.5	5*1	24 ±1	42
NM2	ø3.4	M3	—	□31	28	—	8.5	7	3.5	6	20 ±1	42
NM3	ø3.4	M3	—	□31	28	—	5.5	7	3.5	5*1	20 ±1	42

*1 Shaft type: D-cut shaft

Refer to the "Motor Mounting" on page 60 for details about motor mounting and included parts.

Dimensions: Ball Screw Drive

LEFS25R

Positioning pin hole*1 (Option): Body bottom

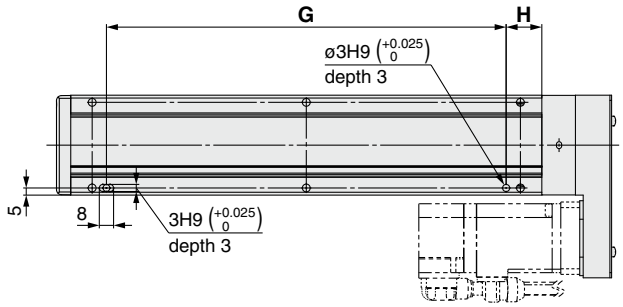

*1 When using the body bottom positioning pin holes, do not simultaneously use the housing B bottom pin hole.

With auto switch (Option)

LEFS25R

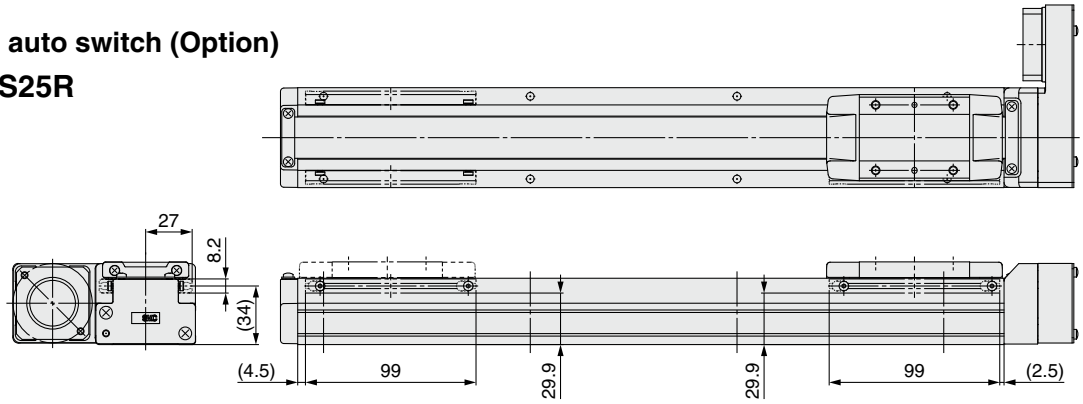

LEFS25L

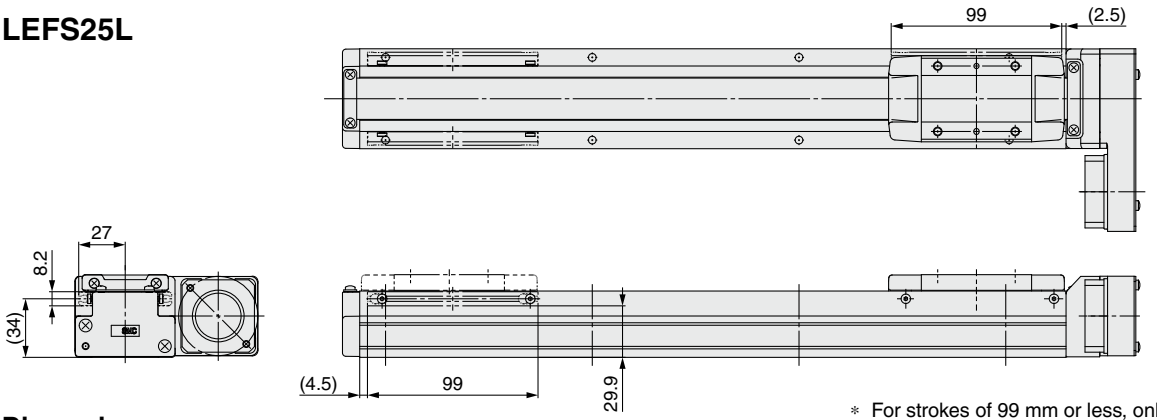

* For strokes of 99 mm or less, only 1 auto switch mounting bracket can be installed on the motor side.

Dimensions [mm]

Stroke	G	H
50	100	30
100	100	45
150	100	45
200	220	45
250	220	45
300	340	45
350	340	45
400	340	45
450	460	45
500	460	45
550	580	45
600	580	45
650	580	45
700	700	45
750	700	45
800	820	45

Refer to the "Motor Mounting" on page 60 for details about motor mounting and included parts.

Dimensions: Ball Screw Drive

LEFS32R

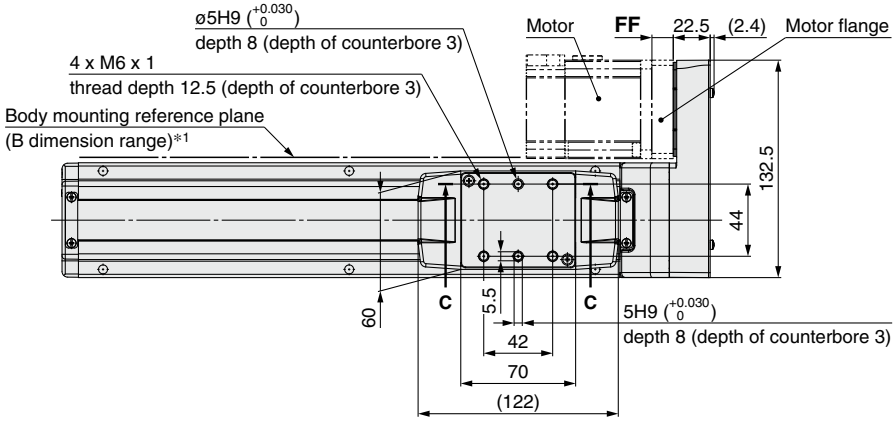

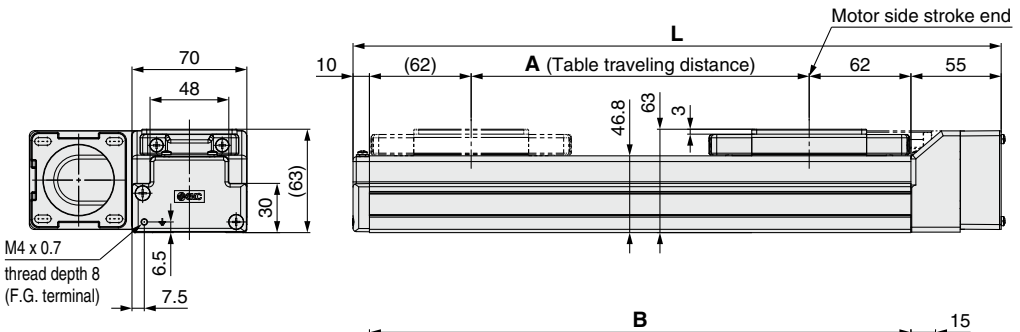

Mounting type: NZ, NY, NW, NU, NT

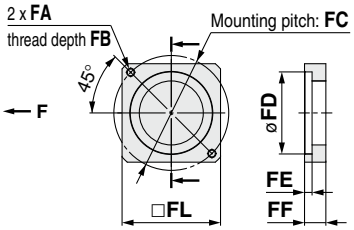

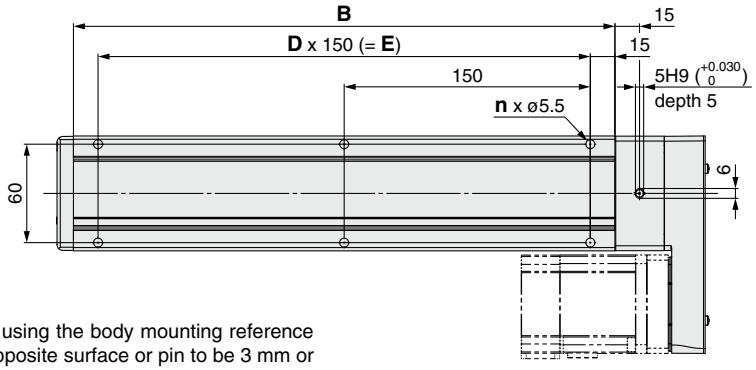

Mounting type: NM1, NM2

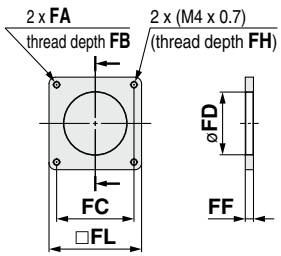

*1 When mounting the actuator using the body mounting reference plane, set the height of the opposite surface or pin to be 3 mm or more. (Recommended height: 5 mm)

Applicable motor dimensions

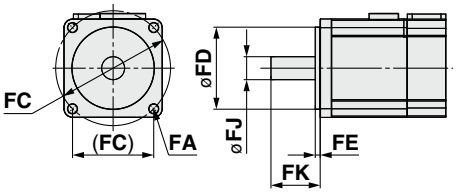

Stroke	L	A	B	n	D	E
50	245	56	180	4	—	—
100	295	106	230	4	—	—
150	345	156	280	4	—	—
200	395	206	330	6	2	300
250	445	256	380	6	2	300
300	495	306	430	6	2	300
350	545	356	480	8	3	450
400	595	406	530	8	3	450
450	645	456	580	8	3	450
500	695	506	630	10	4	600
550	745	556	680	10	4	600
600	795	606	730	10	4	600
650	845	656	780	12	5	750
700	895	706	830	12	5	750
750	945	756	880	12	5	750
800	995	806	930	14	6	900
850	1045	856	980	14	6	900
900	1095	906	1030	14	6	900
950	1145	956	1080	16	7	1050
1000	1195	1006	1130	16	7	1050

Motor Mounting, Applicable Motor Dimensions [mm]

Mounting type	FA		FB	FC	FD	FE (Max.)	FF	FJ	FK	FL	FM
	Mounting type	Applicable motor									
NZ	M5 x 0.8	ø5.8	8.5	ø70	50	4.6	13	14	30 ±1	60	—
NY	M4 x 0.7	ø4.5	8	ø70	50	4.6	13	11	30 ±1	60	—
NW	M5 x 0.8	ø5.8	8.5	ø70	50	4.6	13	9	25 ±1	60	—
NU	M5 x 0.8	ø5.8	8.5	ø70	50	4.6	10.6	11	23 ±1	60	—
NT	M5 x 0.8	ø5.8	8.5	ø70	50	4.6	17	12	30 ±1	60	—
NM1	M4 x 0.7	ø4.5	5	□47.14	38.2	—	5	6.35*1	20 ±1	56.4	5
NM2	M4 x 0.7	ø4.5	8	□50	38.2	—	11.5	10	24 ±1	60	7

*1 Shaft type: D-cut shaft

Refer to the "Motor Mounting" on page 60 for details about motor mounting and included parts.

Dimensions: Ball Screw Drive

LEFS32R

Positioning pin hole*1 (Option): Body bottom

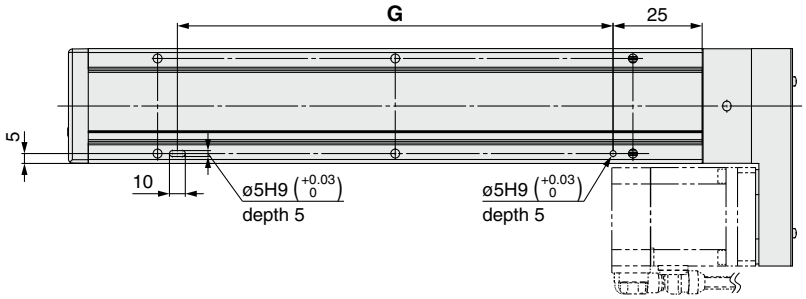

*1 When using the body bottom positioning pin holes, do not simultaneously use the housing B bottom pin hole.

With auto switch (Option)

LEFS32R

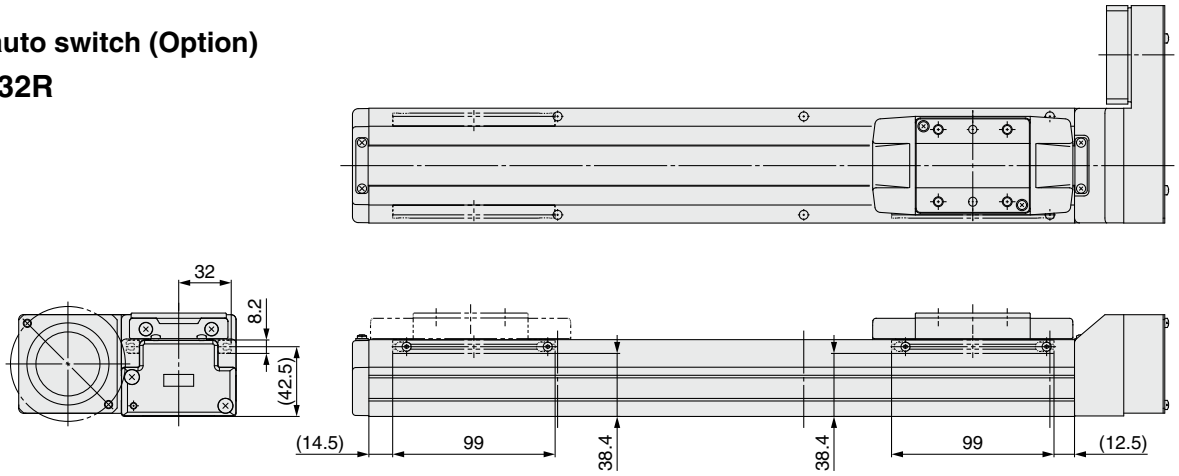

LEFS32L

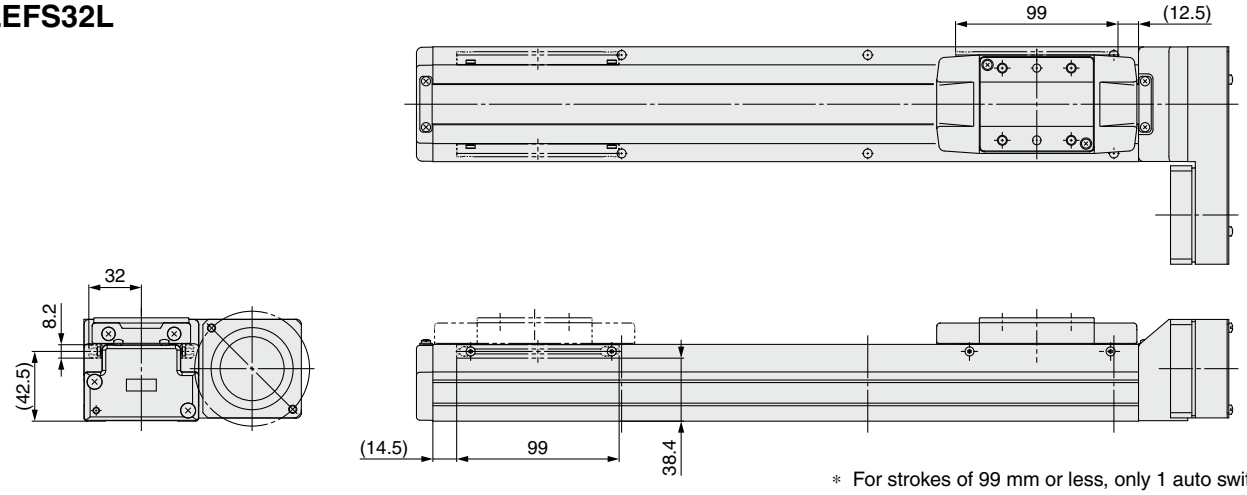

* For strokes of 99 mm or less, only 1 auto switch mounting bracket can be installed on the motor side.

Dimensions [mm]

Stroke	G
50	130
100	130
150	130
200	280
250	280
300	280
350	430
400	430
450	430
500	580

Dimensions [mm]

Stroke	G
550	580
600	580
650	730
700	730
750	730
800	880
850	880
900	880
950	1030
1000	1030

Dimensions: Ball Screw Drive

Refer to the "Motor Mounting" on page 60 for details about motor mounting and included parts.

LEFS40R

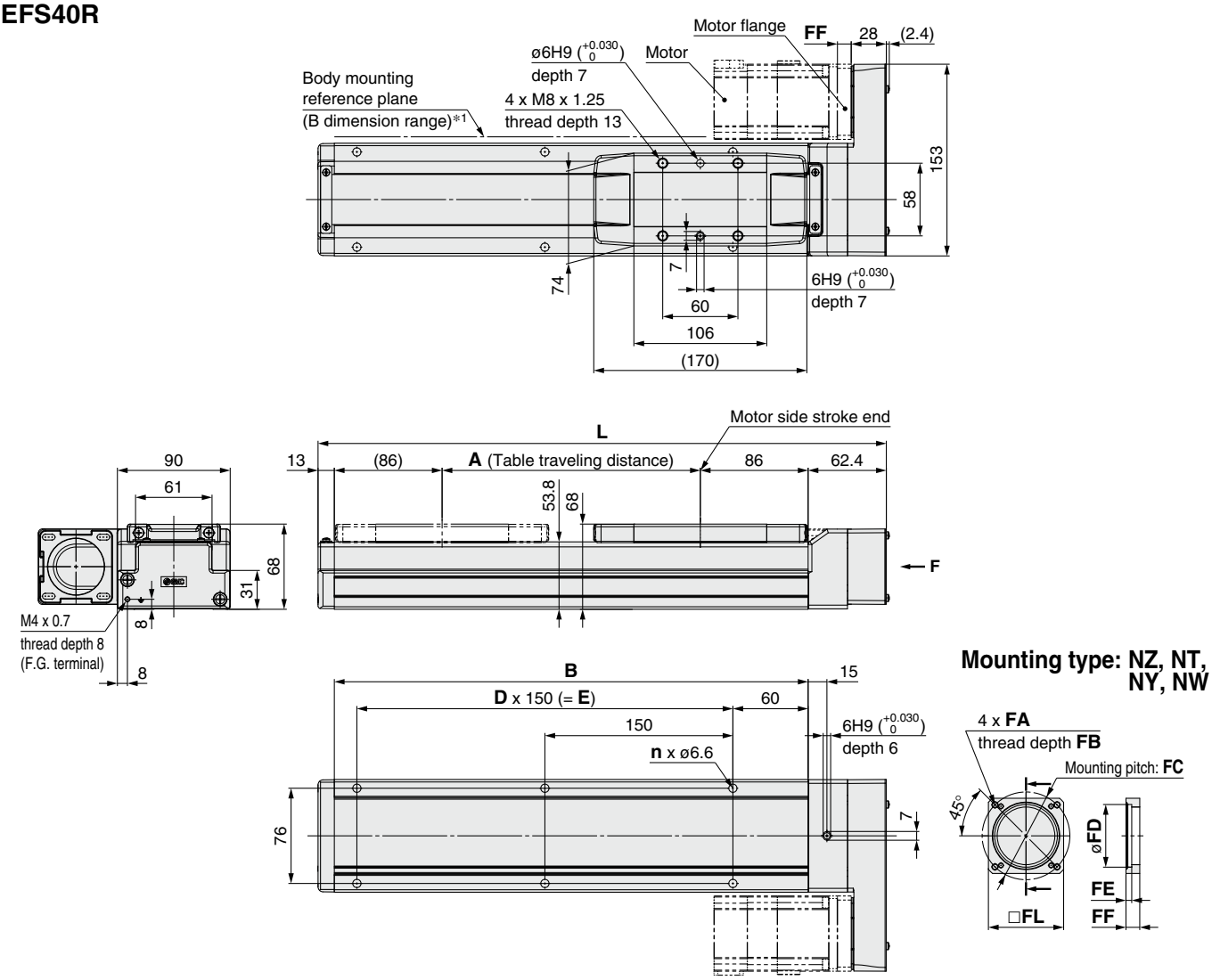

Applicable motor dimensions

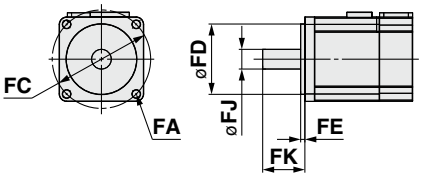

Dimensions

[mm]

Stroke	L	A	B	n	D	E
150	403.4	156	328	4	—	150
200	453.4	206	378	6	2	300
250	503.4	256	428	6	2	300
300	553.4	306	478	6	2	300
350	603.4	356	528	8	3	450
400	653.4	406	578	8	3	450
450	703.4	456	628	8	3	450
500	753.4	506	678	10	4	600
550	803.4	556	728	10	4	600
600	853.4	606	778	10	4	600
650	903.4	656	828	12	5	750
700	953.4	706	878	12	5	750
750	1003.4	756	928	12	5	750
800	1053.4	806	978	14	6	900
850	1103.4	856	1028	14	6	900
900	1153.4	906	1078	14	6	900
950	1203.4	956	1128	16	7	1050
1000	1253.4	1006	1178	16	7	1050
1100	1353.4	1106	1278	18	8	1200
1200	1453.4	1206	1378	18	8	1200

*1 When mounting the actuator using the body mounting reference plane, set the height of the opposite surface or pin to be 3 mm or more. (Recommended height: 5 mm)

Motor Mounting, Applicable Motor Dimensions

[mm]

Mounting type	FA		FB	FC	FD	FE (Max.)	FF	FJ	FK	FL
	Mounting type	Applicable motor								
NZ	M5 x 0.8	ø5.8	8.5	ø70	50	4.6	11	14	30 ±1	60
NY	M4 x 0.7	ø4.5	8	ø70	50	4.6	11	14	30 ±1	60
NW	M5 x 0.8	ø5.8	8.5	ø70	50	4.6	11	9	25 ±1	60
NT	M5 x 0.8	ø5.8	8.5	ø70	50	4.6	14.5	12	30 ±1	60

Refer to the "Motor Mounting" on page 60 for details about motor mounting and included parts.

Dimensions: Ball Screw Drive

LEFS40R

Positioning pin hole*1 (Option): Body bottom

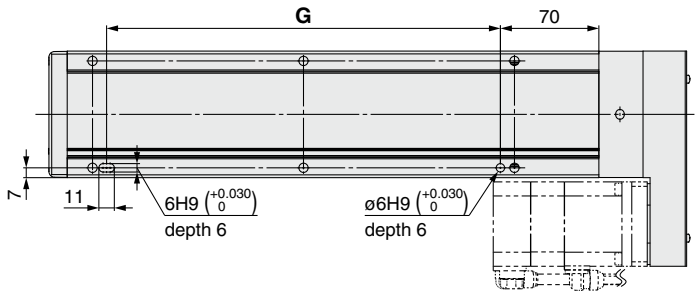

*1 When using the body bottom positioning pin holes, do not simultaneously use the housing B bottom pin hole.

With auto switch (Option)

LEFS40R

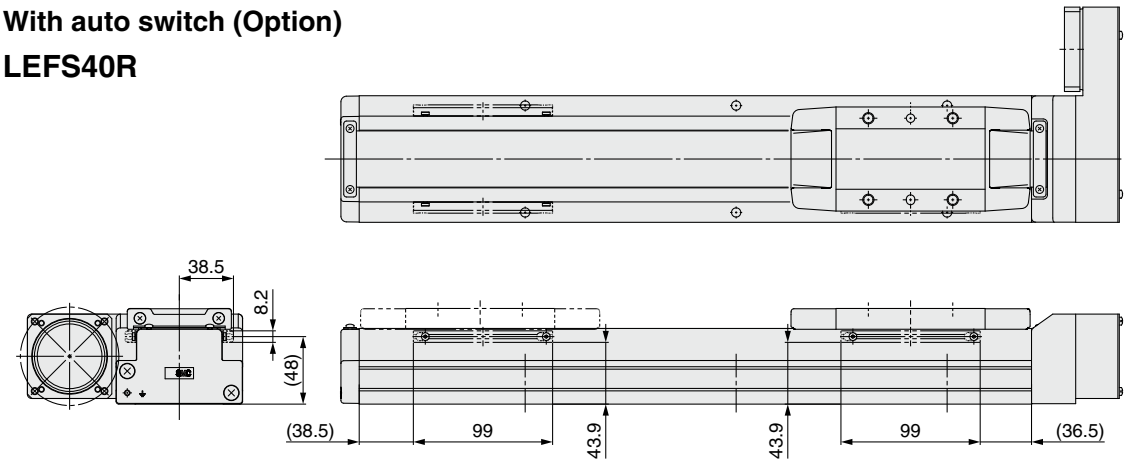

LEFS40L

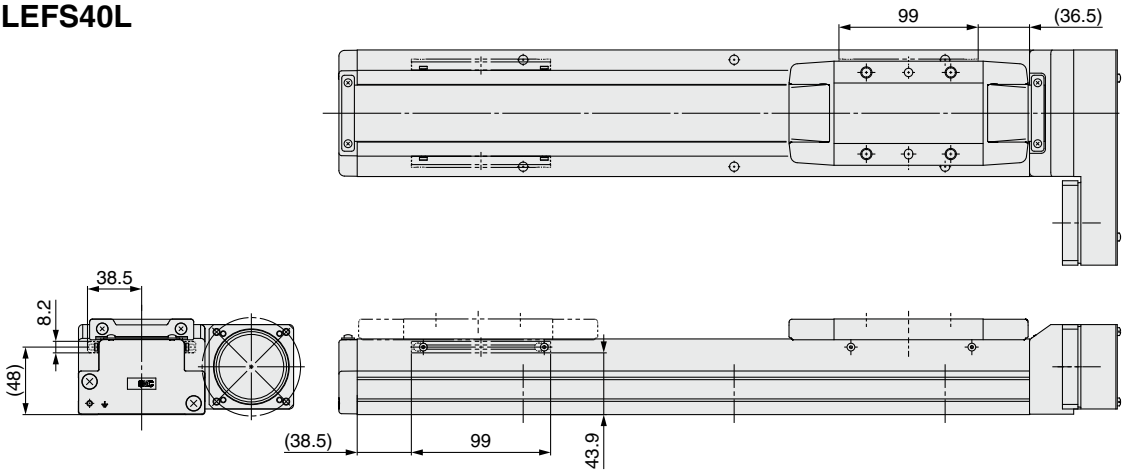

Dimensions [mm]

Stroke	G
150	130
200	280
250	280
300	280
350	430
400	430
450	430
500	580
550	580
600	580

Dimensions [mm]

Stroke	G
650	730
700	730
750	730
800	880
850	880
900	880
950	1030
1000	1030
1100	1180
1200	1180

- When mounting a hub/pulley, remove all oil content, dust, dirt, etc., adhered to the shaft and the inside of the hub/pulley beforehand.
- This product does not include the motor and motor mounting screws. (Provided by the customer)
- Prepare a motor with a round shaft end.
  For the "NM1" or "NM3," prepare a D-cut shaft.
- Take measures to prevent the loosening of the motor mounting screws and hexagon socket head set screws.

Motor Mounting: In-line

Mounting type: NZ, NY, NX, NW, NV, NU, NT, NM2

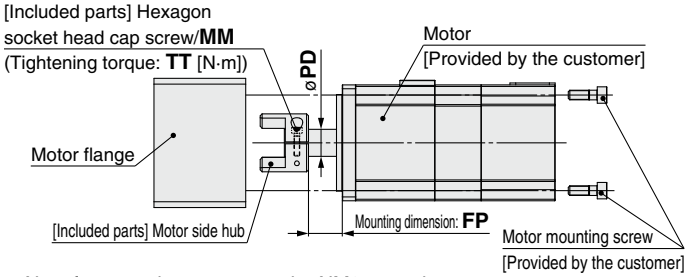

∗ Note for mounting a motor to the NM2 mounting type
Motor mounting screws for the LEFS25 are fixed starting from the motor flange side. (Opposite of the drawing)

Mounting type: NM1

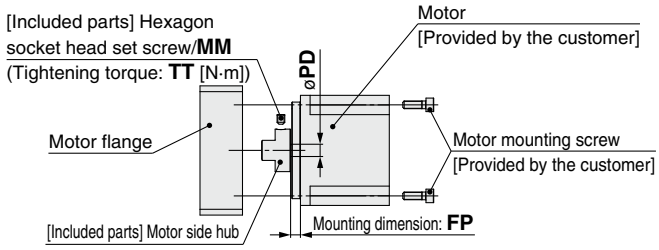

∗ Note for mounting a hub to the NM1 mounting type
When mounting the hub to the motor, make sure to position the set screw vertical to the D-cut surface of the motor shaft. (Refer to the figure shown below.)
∗ Motor mounting screws for the LEFS25 are fixed starting from the motor flange side. (Opposite of the drawing)

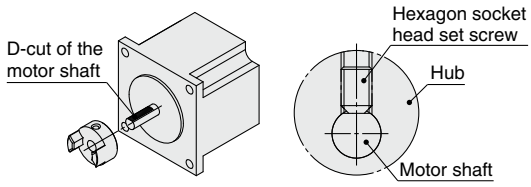

Size: 25 Hub Mounting Dimensions [mm]

Mounting type	MM	TT	PD	FP
NZ	M2.5 x 10	1.0	8	12.4
NY	M2.5 x 10	1.0	8	12.4
NX	M2.5 x 10	1.0	8	6.9
NM1	M3 x 4	0.63	5	11.9
NM2	M2.5 x 10	1.0	6	10

Size: 32 Hub Mounting Dimensions [mm]

Mounting type	MM	TT	PD	FP
NZ	M3 x 12	1.5	14	17.5
NY	M4 x 12	2.5	11	17.5
NX	M4 x 12	2.5	9	5.2
NW	M4 x 12	2.5	9	13
NV	M4 x 12	2.5	9	5.2
NU	M4 x 12	2.5	11	13
NT	M3 x 12	1.5	12	17.5
NM1	M4 x 5	1.5	6.35	5.4
NM2	M4 x 12	2.5	10	12

Size: 40 Hub Mounting Dimensions [mm]

Mounting type	MM	TT	PD	FP
NZ	M3 x 12	1.5	14	17.5
NY	M3 x 12	1.5	14	17.5
NX	M4 x 12	2.5	9	5.2
NW	M4 x 12	2.5	9	13
NV	M4 x 12	2.5	9	5.2
NU	M4 x 12	2.5	11	13
NT	M3 x 12	1.5	12	17.5
NM1	M4 x 5	1.5	6.35	5.1
NM2	M4 x 12	2.5	10	12

Motor Mounting Diagram

Mounting type: NZ, NY, NW, NU, NT

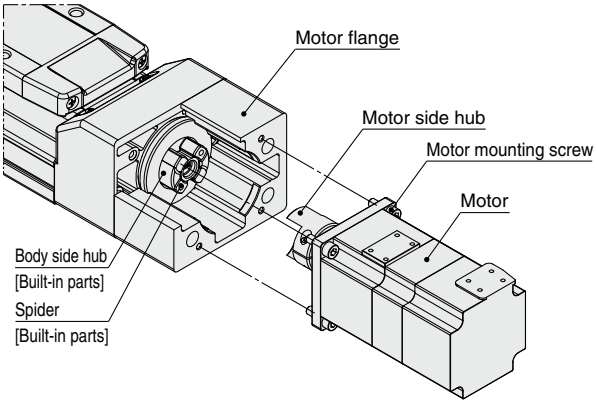

Mounting procedure
1) Secure the motor hub to the motor (provided by the customer) with the MM hexagon socket head cap screw.
2) Check the motor hub position, and then insert it. (Refer to the mounting diagram.)
3) Secure the motor to the motor flange with the motor mounting screws (provided by the customer).

Mounting type: NX, NV, NM1, NM2

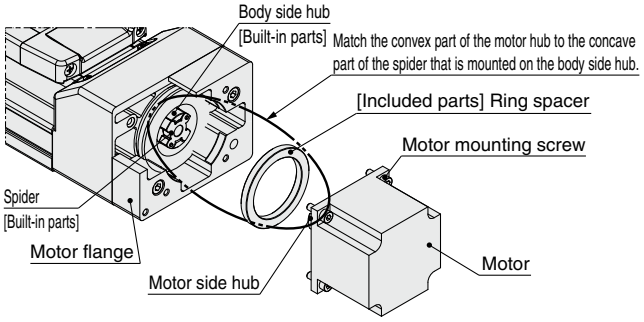

Mounting procedure
1) Secure the motor hub to the motor (provided by the customer) with the MM hexagon socket head cap screw (Mounting type: NX, NV, NM2) or MM hexagon socket head set screw (Mounting type: NM1).
2) Check the motor hub position, and then insert it. (Refer to the mounting diagram.)
3) Mount the ring spacer to the motor.
4) Secure the motor to the motor flange with the motor mounting screws (provided by the customer).
∗ For the LEFS25
4) Remove the motor flange, which has been temporarily mounted, from the housing B, and secure the motor to the motor flange using the motor mounting screws (that are to be prepared by the customer).
5) Tighten the motor flange to the housing B using motor flange mounting screws (included parts). (Tightening torque: 1.5 [N·m])

Included Parts List

Size: 25

Description	Quantity				
	Mounting type				
	NZ	NY	NX	NM1	NM2
Motor side hub	1	1	1	1	1
Hexagon socket head cap screw/set screw (to secure the hub)∗1	1	1	1	1	1
Hexagon socket head cap screw M4 x 18 (to secure the motor flange)	—	—	—	2	2
Ring spacer	—	—	—	1	1

∗1 For screw sizes, refer to the hub mounting dimensions.

Size: 32, 40

Description	Quantity								
	Mounting type								
	NZ	NY	NX	NW	NV	NU	NT	NM1	NM2
Motor side hub	1	1	1	1	1	1	1	1	1
Hexagon socket head cap screw/set screw (to secure the hub)∗1	1	1	1	1	1	1	1	1	1
Ring spacer	—	—	1	—	1	—	—	1	1

∗1 For screw sizes, refer to the hub mounting dimensions.

Motor Mounting: Motor Parallel

Mounting type: NZ, NY, NX, NW, NU, NT, NM2

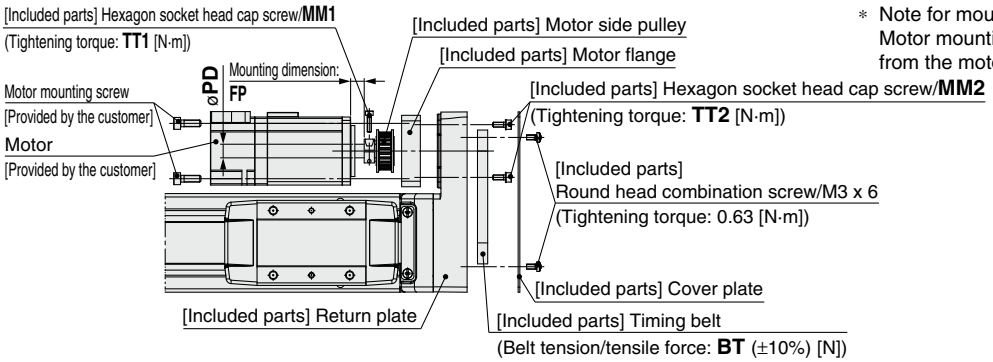

∗ Note for mounting a motor to the NM2 mounting type Motor mounting screws for the LEFS25 are fixed starting from the motor flange side. (Opposite of the drawing)

Mounting type: NM1, NM3

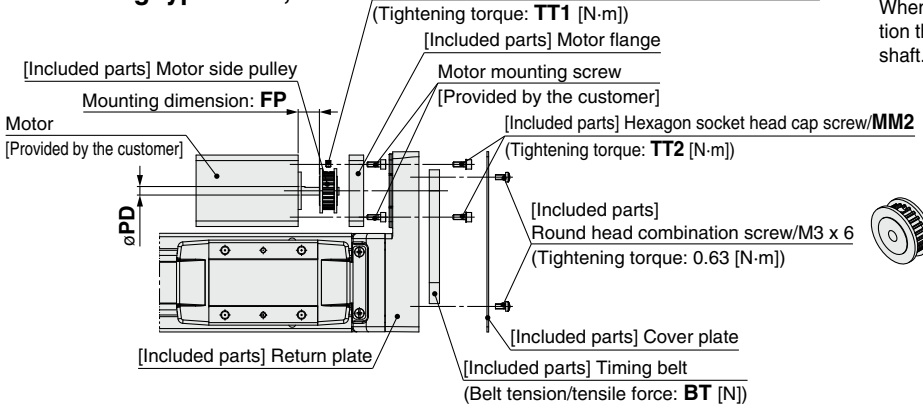

∗ Note for mounting a pulley to the NM1 and NM3 mounting type When mounting the pulley to the motor, make sure to position the set screw vertical to the D-cut surface of the motor shaft. (Refer to the figure shown below.)

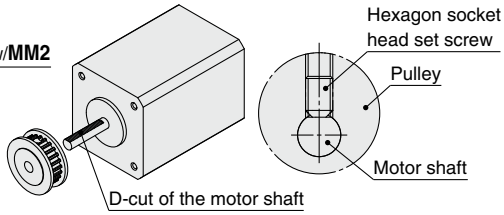

Motor Mounting Diagram

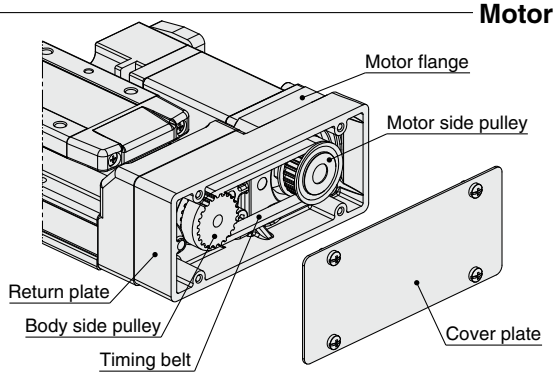

Mounting procedure

1) Secure the motor side pulley to the motor (provided by the customer) with the MM1 hexagon socket head cap screw. For mounting type "NM1/NM3", secure them with the MM1 hexagon socket head set screw.
2) Secure the motor to the motor flange with the motor mounting screws (provided by the customer).
3) Put the timing belt on the motor side pulley and body side pulley, and then secure it temporarily with the hexagon socket head cap screws (2 x MM2). (Refer to the left diagram.)
4) Apply the belt tension/tensile force: BT and tighten the timing belt with the hexagon socket head cap screws (2 x MM2).
5) Secure the return plate with the round head combination screws (4 x M3 x 6).

Size: 25 Pulley Mounting Dimensions [mm]

Mounting type	MM1	TT1	MM2	TT2	PD	FP	BT
NZ/NY	M2.5 x 10	1.0	M3 x 8	0.63	8	8	19.6
NX	M2.5 x 10	1.0	M3 x 8	0.63	8	5	19.6
NM1	M3 x 5	0.63	M3 x 8	0.63	5	12.5	19.6
NM2	M2.5 x 10	1.0	M3 x 8	0.63	6	5.5	19.6
NM3	M3 x 5	0.63	M3 x 8	0.63	5	9.5	19.6

Size: 32 Pulley Mounting Dimensions [mm]

Mounting type	MM1	TT1	MM2	TT2	PD	FP	BT
NZ	M3 x 12	1.5	M4 x 12	1.5	14	6.6	49
NY	M3 x 12	1.5	M4 x 12	1.5	11	6.6	49
NW	M4 x 12	2.5	M4 x 12	1.5	9	6.6	49
NU	M3 x 12	1.5	M4 x 12	1.5	11	4.2	49
NT	M3 x 12	1.5	M4 x 12	1.5	12	10.6	49
NM1	M3 x 4	0.63	M4 x 12	1.5	6.35	10.6	49
NM2	M3 x 12	1.5	M4 x 12	1.5	10	5.1	49

Size: 40 Pulley Mounting Dimensions [mm]

Mounting type	MM1	TT1	MM2	TT2	PD	FP	BT
NZ/NY	M4 x 12	2.5	M4 x 12	1.5	14	4.5	98.1
NW	M4 x 12	2.5	M4 x 12	1.5	9	4.5	98.1
NT	M4 x 12	2.5	M4 x 12	1.5	12	8	98.1

Included Parts List

Size: 25

Description	Quantity
Motor flange	1
Motor side pulley	1
Cover plate	1
Timing belt	1
Hexagon socket head cap screw/set screw (to secure the pulley)∗1	1
Hexagon socket head cap screw∗1 (to secure the motor flange)	2
Round head combination screw M3 x 6	4

∗1 For screw sizes, refer to the pulley mounting dimensions.

Size: 32, 40

Description	Quantity	
	32	40
Motor flange	1	1
Motor side pulley	1	1
Cover plate	1	1
Timing belt	1	1
Hexagon socket head cap screw/set screw (to secure the pulley)∗1	1	1
Hexagon socket head cap screw∗1 (to secure the motor flange)	2	4
Round head combination screw M3 x 6	4	4

∗1 For screw sizes, refer to the pulley mounting dimensions.

LEFS Series
Motor Mounting Parts

Motor Flange Option

A motor can be added to the motorless specification after purchase. The applicable mounting types are shown below. (Except NM1 and NM3)
Use the following part numbers to select a compatible motor flange option and place an order.

How to Order

LEF S – MF 25 □ – NZ

Ball screw drive ●

❶ ❷ ❸

❶ Size

25	For LEF□25
32	For LEF□32
40	For LEF□40

❷ Motor mounting position

Nil	In-line
P	(Right side/Left side) parallel

❸ Mounting type

NZ	NV
NY	NU
NX	NT
NW	NM2

∗ Select only NZ, NY, NX or NM2 for the LEFS-MF25.

Compatible Motors and Mounting Types∗5

Applicable motor model		Size/Mounting type														
Manufacturer	Series	25						32/40								
		NZ	NY	NX	NM1	NM2	NM3	NZ	NY	NX	NW	NV	NU	NT	NM1	NM2
Mitsubishi Electric Corporation	MELSERVO JN/J4/J5	●	—	—	—	—	—	●	—	—	—	—	—	—	—	—
YASKAWA Electric Corporation	Σ-V/7/X	●∗4	—	—	—	—	—	●	—	—	—	—	—	—	—	—
SANYO DENKI CO., LTD.	SANMOTION R	●	—	—	—	—	—	●	—	—	—	—	—	—	—	—
OMRON Corporation	OMNUC G5/1S	●	—	—	—	—	—	—	●	—	—	—	—	—	—	—
Panasonic Corporation	MINAS A5/A6	● (MHMF only)	●	—	—	—	—	—	●	—	—	—	—	—	—	—
FANUC CORPORATION	βis (-B)	●	—	—	—	—	—	● (β1 only)	—	—	●	—	—	—	—	—
NIDEC SANKYO CORPORATION	S-FLAG	●	—	—	—	—	—	●	—	—	—	—	—	—	—	—
KEYENCE CORPORATION	SV/SV2	●∗4	—	—	—	—	—	●	—	—	—	—	—	—	—	—
FUJI ELECTRIC CO., LTD.	ALPHA7	●	—	—	—	—	—	●	—	—	—	—	—	—	—	—
MinebeaMitsumi Inc.	Hybrid stepping motors	—	—	—	●∗1	—	●∗3	—	—	—	—	—	—	—	●∗2	—
Shinano Kenshi Co., Ltd.	CSB-BZ	—	—	—	●∗1	—	●∗3	—	—	—	—	—	—	—	—	—
ORIENTAL MOTOR Co., Ltd.	α STEP AR/AZ	—	—	—	—	● (46 only)	—	—	—	—	—	—	—	—	—	●∗2
FASTECH Co.,Ltd.	Ezi-SERVO	—	—	—	●	—	—	—	—	—	—	—	—	—	●∗2	—
Rockwell Automation, Inc. (Allen-Bradley)	Kinetix MP/VP/TL	● (TL only)	—	—	—	—	—	—	—	●∗1 (MP/VP only)	—	—	—	● (TL only)	—	—
Beckhoff Automation GmbH	AM 30/31/80/81	●	—	—	—	—	—	—	—	●∗1 (80/81 only)	—	●∗1 (30 only)	●∗2 (31 only)	—	—	—
Siemens AG	SIMOTICS S-1FK7	—	—	●	—	—	—	—	—	●∗1	—	—	—	—	—	—
Delta Electronics, Inc.	ASDA-A2	●	—	—	—	—	—	●	—	—	—	—	—	—	—	—
ANCA Motion	AMD2000	●	—	—	—	—	—	●	—	—	—	—	—	—	—	—

∗ When the LEF□□□$^{NM1}_{NM3}$□-□ is purchased, it is not possible to change to other mounting types.

∗1 Motor mounting position: In-line only
∗2 Only size 32 is available when the motor mounting position is right (or left) side parallel.
∗3 Motor mounting position: Right (or left) side parallel only
∗4 For some motors, the connector may protrude from the motor body. Be sure to check for interference with the mounting surface before selecting a motor.
∗5 The compatible motors and mounting types are typical examples. Select the mounting type after referring to the "Motor Mounting, Applicable Motor Dimensions" tables on the following actuator body "Dimensions" pages.

Dimensions: Motor Flange Option

Motor mounting position: In-line

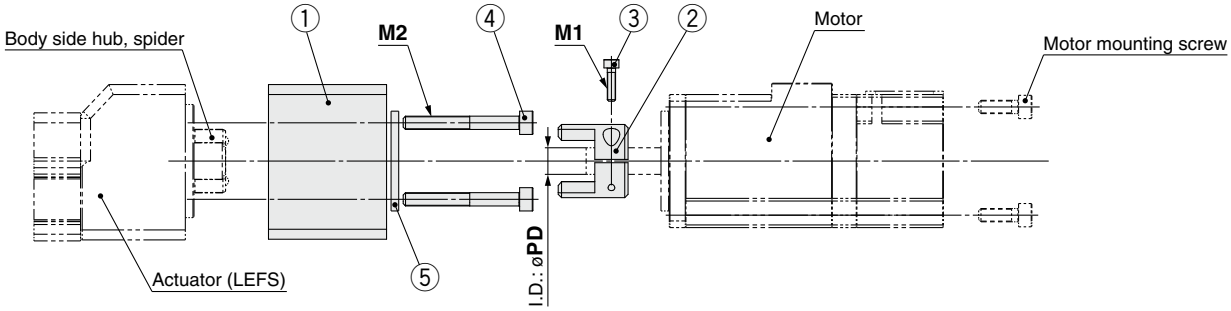

Component Parts

No.	Description	Quantity
1	**Motor flange**	1
2	**Hub (Motor side)**	1
3	**Hexagon socket head cap screw (to secure the hub)**	1
4	**Hexagon socket head cap screw (to mount the motor flange)**	2
5	**Ring spacer (Only for mounting types "NM2" in size 25 and "NX," "NV," and "NM2" in sizes 32 and 40)**	1

Motor flange details

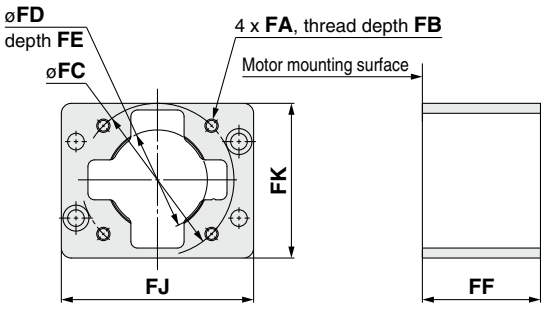

For NM2

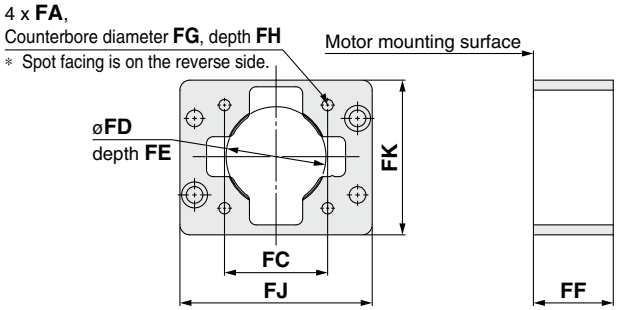

Dimensions

[mm]

Size	Mounting type	FA	FB	FC	FD	FE	FF	FG	FH	FJ	FK	M1	M2	PD
25	**NZ/NX**	M4 x 0.7	8	ø46	30	3.5	35.5	—	—	57.8	46.5	M2.5 x 10	M4 x 35	8
	NY	M3 x 0.5	8	ø45	30	3.5	35.5	—	—	57.8	46.5	M2.5 x 10	M4 x 35	8
	NM2	ø3.4	—	□31	22∗1	2.5∗1	33.1	6.5	22.6	57.8	46.5	M2.5 x 10	M4 x 18	6
32	**NZ**	M5 x 0.8	9	ø70	50	5	46	—	—	69.8	61.4	M3 x 12	M5 x 40	14
	NY	M4 x 0.7	8	ø70	50	5	46	—	—	69.8	61.4	M4 x 12	M5 x 40	11
	NX	M5 x 0.8	9	ø63	40∗1	5	49.7	—	—	69.8	61.4	M4 x 12	M5 x 40	9
	NW	M5 x 0.8	9	ø70	50	5	47.5	—	—	69.8	61.4	M4 x 12	M5 x 40	9
	NV	M4 x 0.7	8	ø63	40∗1	5	49.7	—	—	69.8	61.4	M4 x 12	M5 x 40	9
	NU	M5 x 0.8	9	ø70	50	5	47.5	—	—	69.8	61.4	M4 x 12	M5 x 40	11
	NT	M5 x 0.8	9	ø70	50	5	46	—	—	69.8	61.4	M3 x 12	M5 x 40	12
	NM2	M4 x 0.7	8	□50	36∗1	4.5∗1	40.1	—	—	69.8	61.4	M4 x 12	M5 x 25	10
40	**NZ**	M5 x 0.8	9	ø70	50	5	47.5	—	—	89.8	66.9	M3 x 12	M5 x 40	14
	NY	M4 x 0.7	8	ø70	50	5	47.5	—	—	89.8	66.9	M3 x 12	M5 x 40	14
	NX	M5 x 0.8	9	ø63	40∗1	5	51	—	—	89.8	66.9	M4 x 12	M5 x 40	9
	NW	M5 x 0.8	9	ø70	50	5	48.8	—	—	89.8	66.9	M4 x 12	M5 x 40	9
	NV	M4 x 0.7	8	ø63	40∗1	5	51	—	—	89.8	66.9	M4 x 12	M5 x 40	9
	NU	M5 x 0.8	9	ø70	50	5	48.8	—	—	89.8	66.9	M4 x 12	M5 x 40	11
	NT	M5 x 0.8	9	ø70	50	5	47.5	—	—	89.8	66.9	M3 x 12	M5 x 40	12
	NM2	M4 x 0.7	8	□50	36∗1	4.5∗1	41.4	—	—	89.8	66.9	M4 x 12	M5 x 25	10

∗1 Dimensions after mounting a ring spacer

Dimensions: Motor Flange Option

Motor mounting position: Motor parallel

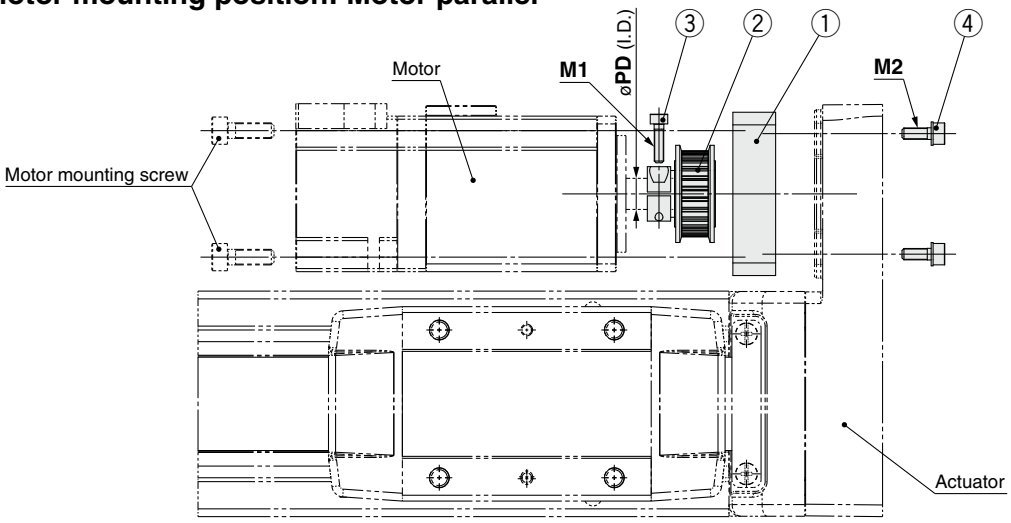

Component Parts

No.	Description	Quantity Size 25, 32	Quantity Size 40
1	**Motor flange**	1	1
2	**Motor pulley**	1	1
3	**Hexagon socket head cap screw (to secure the pulley)**	1	1
4	**Hexagon socket head cap screw (to mount the motor flange)**	2	4

Motor flange details

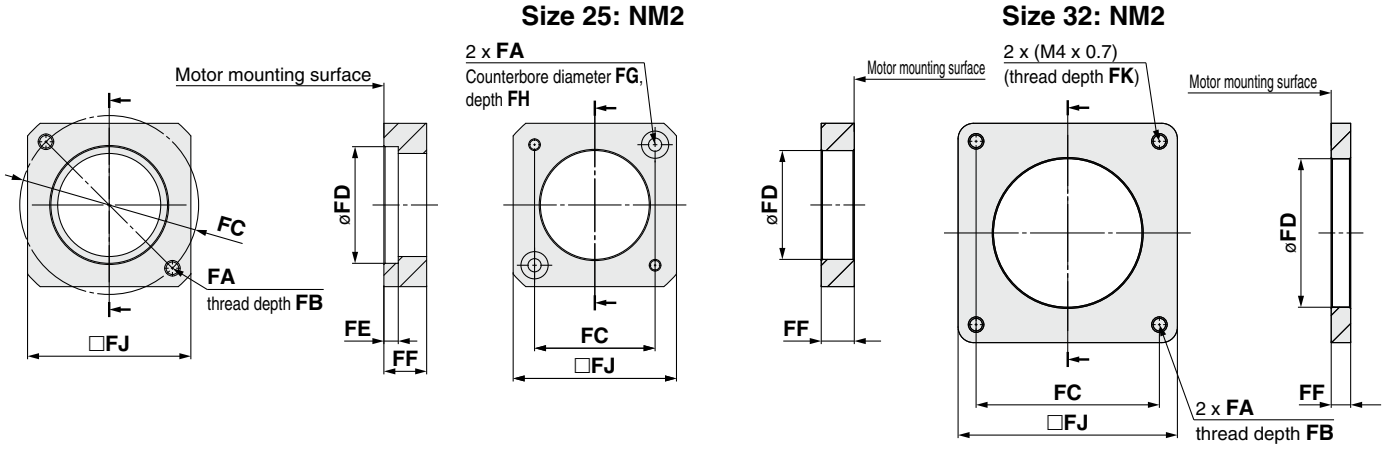

Dimensions

[mm]

Size	Mounting type	FA	FB	FC	FD	FE	FF	FG	FH	FJ	FK	M1	M2	PD
25	**NZ**	2 x M4 x 0.7	7.5	ø46	30	3.7	11	—	—	42	—	M2.5 x 10	M3 x 8	8
	NY	2 x M3 x 0.5	5.5	ø45	30	5	11	—	—	38	—	M2.5 x 10	M3 x 8	8
	NX	2 x M4 x 0.7	7	ø46	30	3.7	8	—	—	42	—	M2.5 x 10	M3 x 8	8
	NM2	ø3.4	—	□31	28	—	8.5	7	3.5	42	—	M2.5 x 10	M3 x 8	6
32	**NZ**	2 x M5 x 0.8	8.5	ø70	50	4.6	13	—	—	60	—	M3 x 12	M4 x 12	14
	NY	2 x M4 x 0.7	8	ø70	50	4.6	13	—	—	60	—	M3 x 12	M4 x 12	11
	NW	2 x M5 x 0.8	8.5	ø70	50	4.6	13	—	—	60	—	M4 x 12	M4 x 12	9
	NU	2 x M5 x 0.8	8.5	ø70	50	4.6	10.6	—	—	60	—	M3 x 12	M4 x 12	11
	NT	2 x M5 x 0.8	8.5	ø70	50	4.6	17	—	—	60	—	M3 x 12	M4 x 12	12
	NM2	M4 x 0.7	8	□50	38.2	—	11.5	—	—	60	7	M3 x 12	M4 x 12	10
40	**NZ**	4 x M5 x 0.8	8.5	ø70	50	4.6	11	—	—	60	—	M4 x 12	M4 x 12	14
	NY	4 x M4 x 0.7	8	ø70	50	4.6	11	—	—	60	—	M4 x 12	M4 x 12	14
	NW	4 x M5 x 0.8	8.5	ø70	50	4.6	11	—	—	60	—	M4 x 12	M4 x 12	9
	NT	4 x M5 x 0.8	8.5	ø70	50	4.6	14.5	—	—	60	—	M4 x 12	M4 x 12	12

Model Selection

LEFB Series ▶p. 69

Selection Procedure

Step 1 Check the work load–speed. → **Step 2** Check the cycle time. → **Step 3** Check the allowable moment.

Selection Example

The model selection method shown below corresponds to SMC's standard motor. For use in combination with a motor from a different manufacturer, check the available product information of the motor to be used.

Operating conditions

- Workpiece mass: 20 [kg]
- Speed: 1500 [mm/s]
- Acceleration/Deceleration: 3000 [mm/s²]
- Stroke: 2000 [mm]
- Mounting position: Horizontal upward
- Workpiece mounting condition:

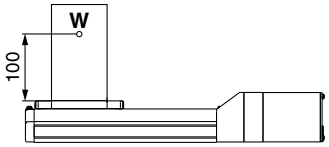

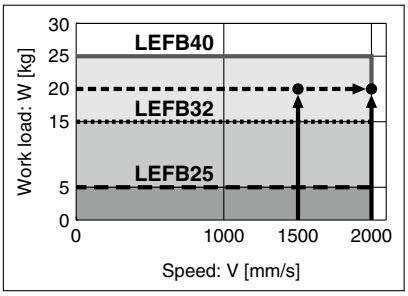

<Speed–Work Load Graph> (LEFB40)

Step 1 Check the work load–speed. <Speed–Work Load Graph>

Select a model based on the workpiece mass and speed which are within the range of the actuator body specifications while referencing the speed–work load graph (guide) on page 65.

Selection example) The **LEFB40□S-2000** can be temporarily selected as a possible candidate based on the graph shown on the right side.

∗ Refer to the selection method of motor manufacturers for regeneration resistance.

Step 2 Check the cycle time.

Calculate **the cycle time** using the following calculation method.

Cycle time:

T can be found from the following equation.

$$T = T1 + T2 + T3 + T4 \text{ [s]}$$

- T1: Acceleration time and T3: Deceleration time can be found by the following equation.

$$T1 = V/a1 \text{ [s]} \qquad T3 = V/a2 \text{ [s]}$$

- T2: Constant speed time can be found from the following equation.

$$T2 = \frac{L - 0.5 \cdot V \cdot (T1 + T3)}{V} \text{ [s]}$$

- T4: Settling time varies depending on the motor type and load. The value below is recommended.

$$T4 = 0.05 \text{ [s]}$$

Calculation example)
T1 to T4 can be calculated as follows.

$T1 = V/a1 = 1500/3000 = 0.5$ [s],

$T3 = V/a2 = 1500/3000 = 0.5$ [s]

$$T2 = \frac{L - 0.5 \cdot V \cdot (T1 + T3)}{V} = \frac{2000 - 0.5 \cdot 1500 \cdot (0.5 + 0.5)}{1500} = 0.83 \text{ [s]}$$

$T4 = 0.05$ [s]

The cycle time can be found as follows.

$T = T1 + T2 + T3 + T4$

$= 0.5 + 0.83 + 0.5 + 0.05$

$= \mathbf{1.88}$ **[s]**

∗ The conditions for the settling time vary depending on the motor or driver to be used.

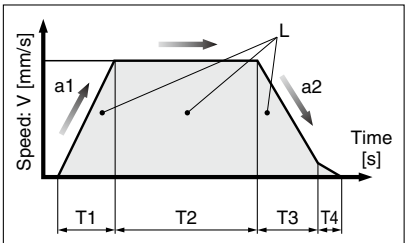

L : Stroke [mm] ··· (Operating condition)
V : Speed [mm/s] ··· (Operating condition)
a1: Acceleration [mm/s²] ··· (Operating condition)
a2: Deceleration [mm/s²] ··· (Operating condition)

T1: Acceleration time [s]
Time until reaching the set speed
T2: Constant speed time [s]
Time while the actuator is operating at a constant speed
T3: Deceleration time [s]
Time from the beginning of the constant speed operation to stop
T4: Settling time [s]
Time until positioning is completed

Step 3 Check the allowable moment. <Static allowable moment> (page 38) <Dynamic allowable moment> (page 66)

Confirm the moment that applies to the actuator is within the allowable range for both static and dynamic conditions.

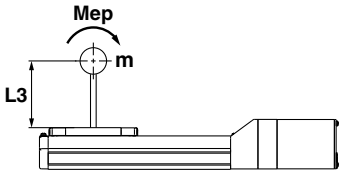

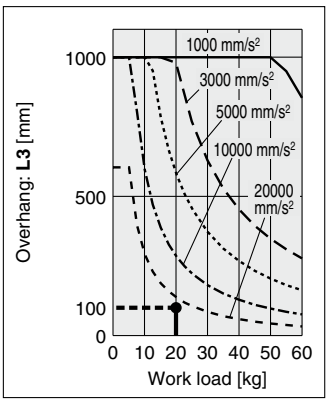

Based on the above calculation result, the LEFB40□S-2000 should be selected.

∗ The values shown below are allowable values of the actuator body.
Do not use the actuator so that it exceeds these specification ranges.

Speed–Work Load Graph (Guide)

LEFB□/Belt Drive

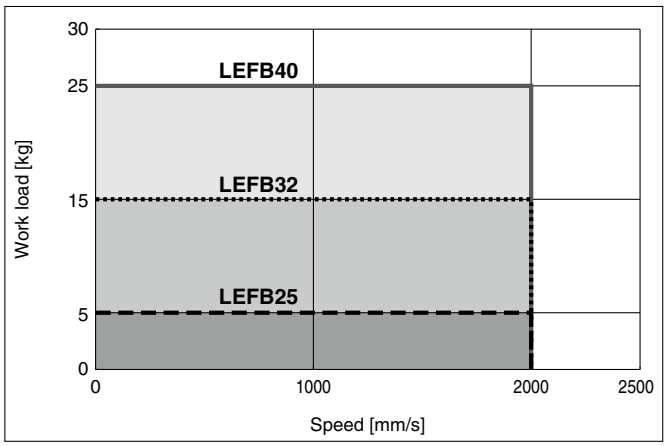

Cycle Time Graph (Guide)

LEFB□/Belt Drive

LEFB25/32/40

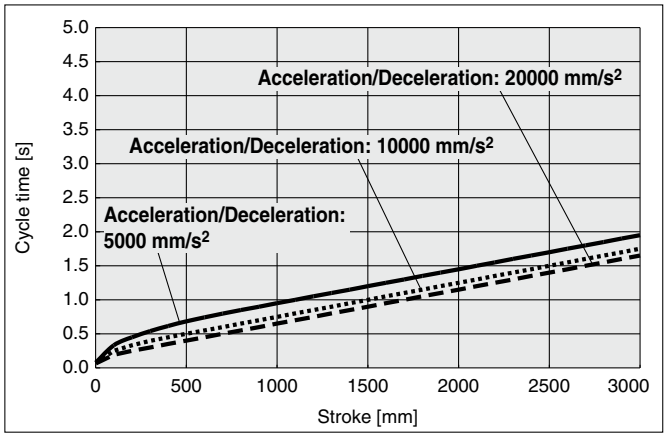

∗ Cycle time is for when maximum speed.
∗ Maximum stroke: LEFB25: 2000 mm
LEFB32: 2500 mm
LEFB40: 3000 mm

Work Load–Acceleration/Deceleration Graph (Guide)

LEFB□/Belt Drive

LEFB25□ (Duty ratio)

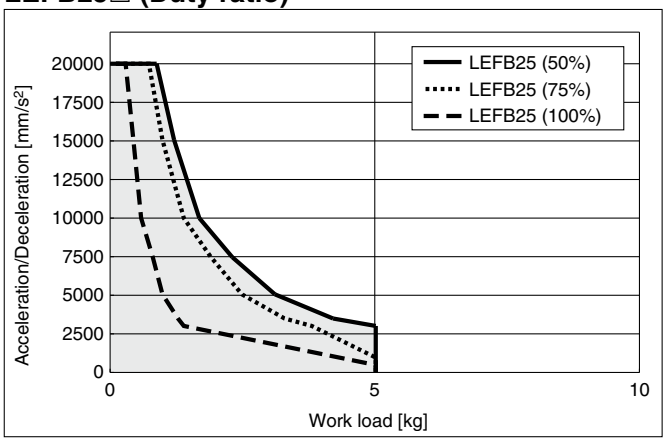

LEFB32□ (Duty ratio)

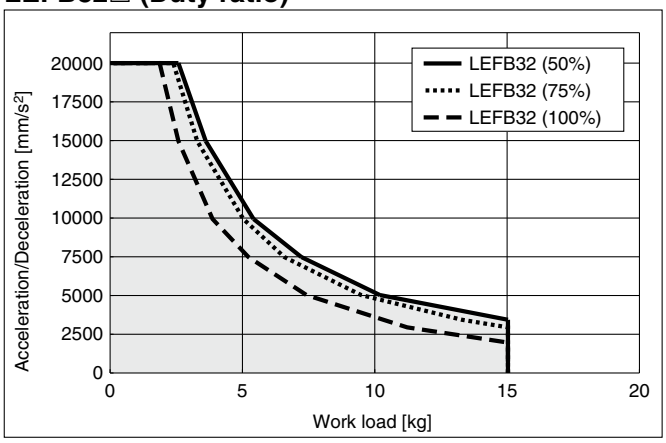

LEFB40□ (Duty ratio)

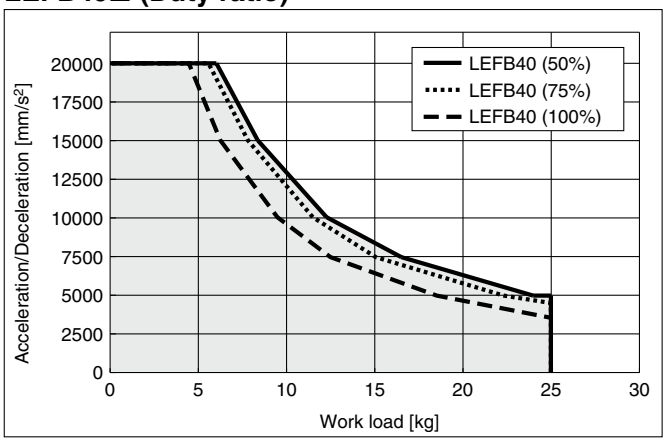

These graphs are examples of when the standard motor is mounted.
Determine the duty ratio after taking into account the load factor of the motor or driver to be used.

Dynamic Allowable Moment

∗ These graphs show the amount of allowable overhang (guide unit) when the center of gravity of the work-piece overhangs in one direction. When selecting the overhang, refer to the "Calculation of Guide Load Factor" or the Electric Actuator Model Selection Software for confirmation: https://www.smcworld.com

Acceleration/Deceleration ——— 1000 mm/s² — — — 3000 mm/s² ····· 5000 mm/s² —·—·— 10000 mm/s² - - - - 20000 mm/s²

Orientation	Load overhanging direction **m** : Work load [kg] **Me**: Allowable moment [N·m] **L** : Overhang to the work load center of gravity [mm]		Model		
			LEFB25□	**LEFB32□**	**LEFB40□**
Horizontal/Bottom	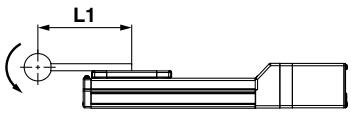	X	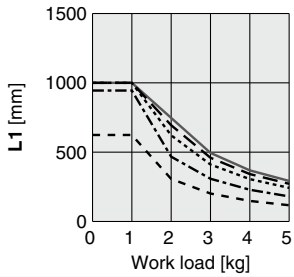	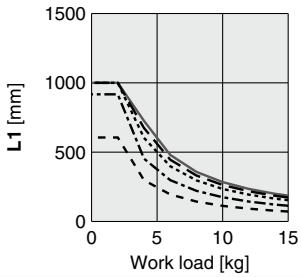	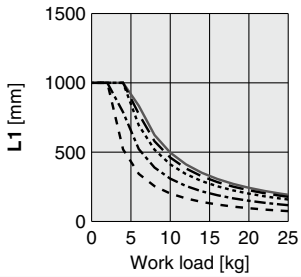
	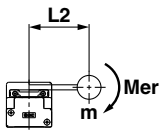	Y	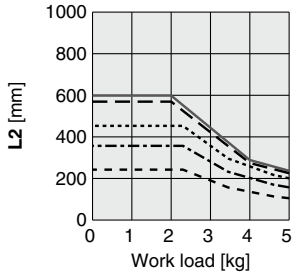	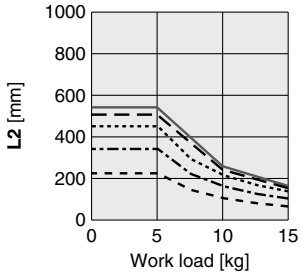	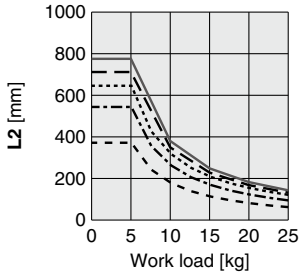
	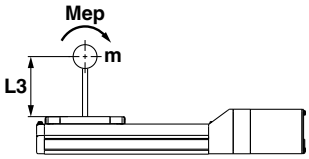	Z	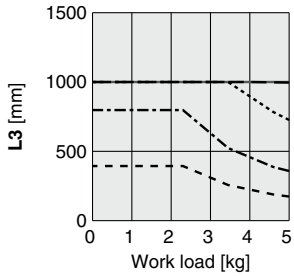	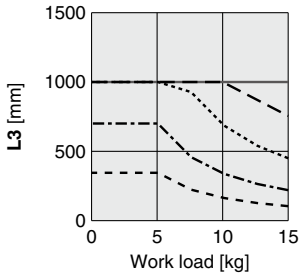	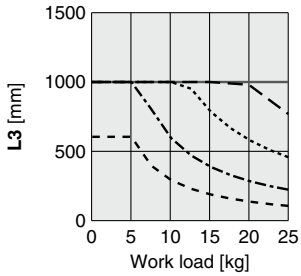
Wall	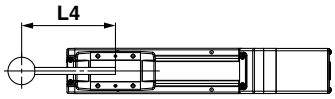	X	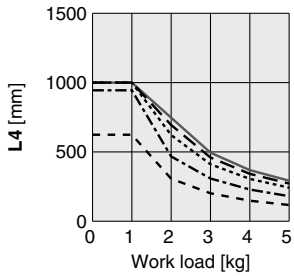	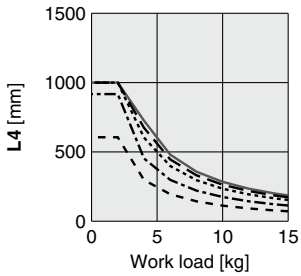	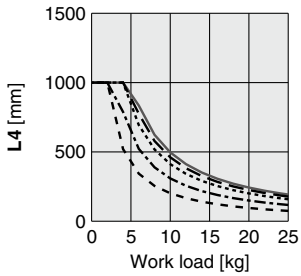
	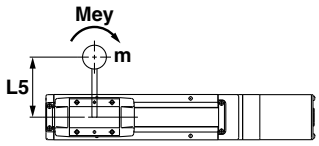	Y	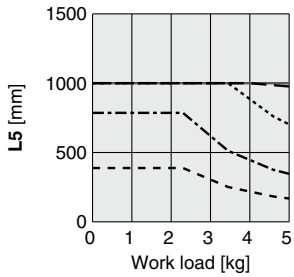	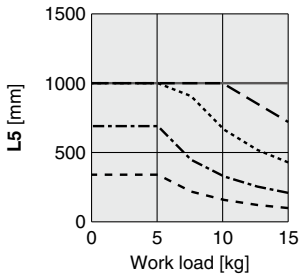	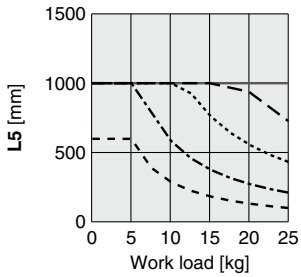
	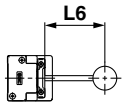	Z	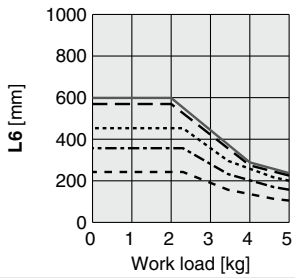	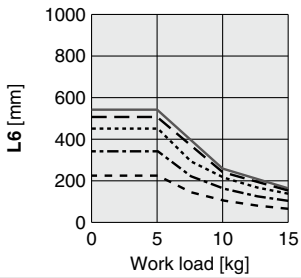	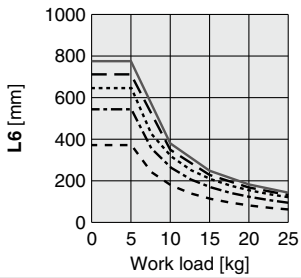

Calculation of Guide Load Factor

1. Decide operating conditions.
   Model: LEFB
   Size: 25/32/40
   Mounting orientation: Horizontal/Bottom/Wall
   Acceleration [mm/s²]: **a**
   Work load [kg]: **m**
   Work load center position [mm]: **Xc/Yc/Zc**
2. Select the target graph while referencing the model, size, and mounting orientation.
3. Based on the acceleration and work load, find the overhang [mm]: **Lx/Ly/Lz** from the graph.
4. Calculate the load factor for each direction.
   $\alpha x = Xc/Lx$, $\alpha y = Yc/Ly$, $\alpha z = Zc/Lz$
5. Confirm the total of αx, αy, and αz is 1 or less.
   $\alpha x + \alpha y + \alpha z \leq 1$
   When 1 is exceeded, consider a reduction of acceleration and work load, or a change of the work load center position and series.

Mounting Orientation

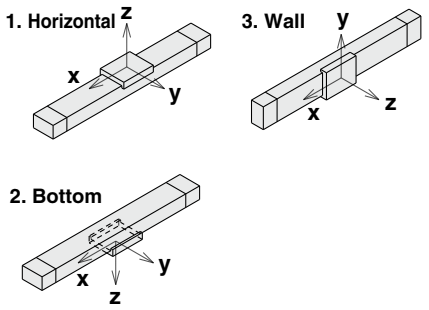

Example

1. Operating conditions
   Model: LEFB40
   Size: 40
   Mounting orientation: Horizontal
   Acceleration [mm/s²]: 3000
   Work load [kg]: 20
   Work load center position [mm]: **Xc = 0**, **Yc = 50**, **Zc = 200**
2. Select the graphs for horizontal of the LEFB40□ on page 66.
3. **Lx = 250 mm**, **Ly = 180 mm**, **Lz = 1000 mm**
4. The load factor for each direction can be found as follows.
   $\alpha x = 0/250 = 0$
   $\alpha y = 50/180 = 0.27$
   $\alpha z = 200/1000 = 0.2$
5. $\alpha x + \alpha y + \alpha z = 0.47 \leq 1$

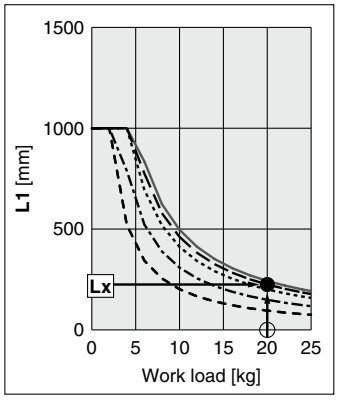

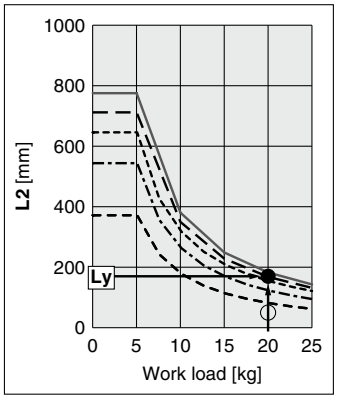

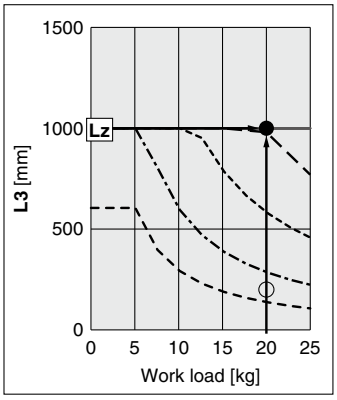

Table Accuracy (Reference Value)

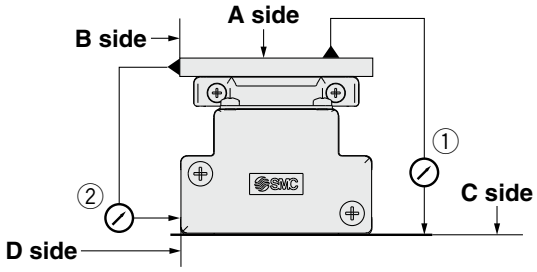

Model	Traveling parallelism [mm] (Every 300 mm)	
	① C side traveling parallelism to A side	② D side traveling parallelism to B side
LEFB25	0.05	0.03
LEFB32	0.05	0.03
LEFB40	0.05	0.03

∗ Traveling parallelism does not include the mounting surface accuracy.

Table Displacement (Reference Value)

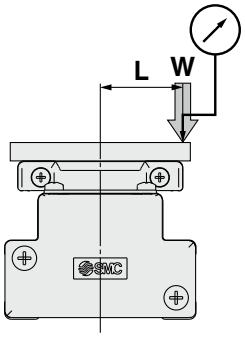

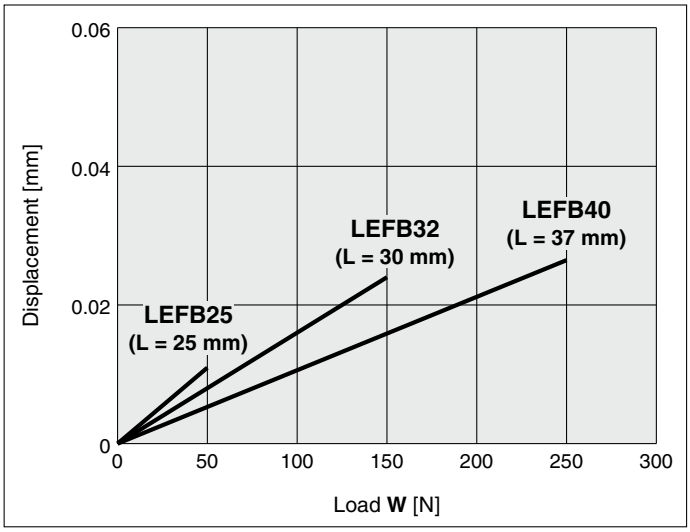

∗ This displacement is measured when a 15 mm aluminum plate is mounted and fixed on the table.
∗ Check the clearance and play of the guide separately.

Overhang Displacement Due to Table Clearance (Initial Reference Value)

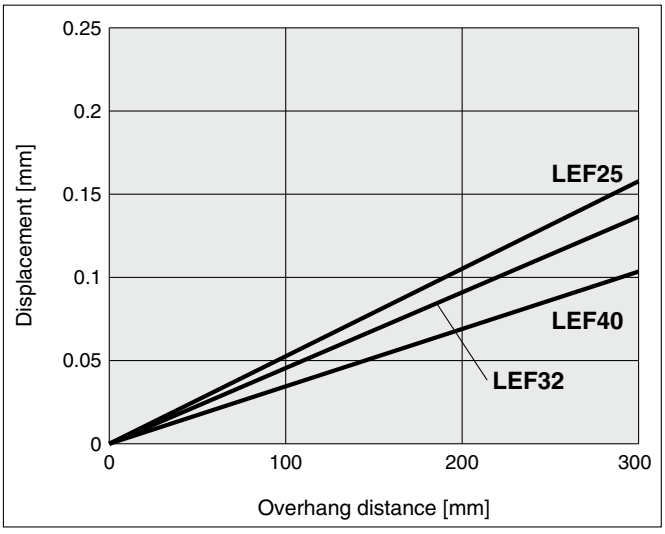

Motorless Type

Electric Actuator/Slider Type Belt Drive

LEFB Series LEFB25, 32, 40

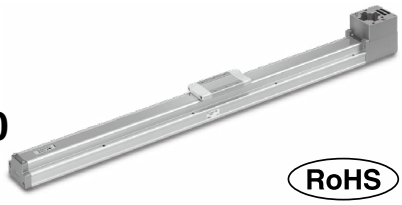

RoHS

How to Order

LEFB 25 ❐ NZ S – 300 C K

❶ ❷ ❸ ❹ ❺ ❻ ❼

❶ Size

25
32
40

❺ Stroke [mm]

300	300
to	to
3000	3000

∗ Refer to the applicable stroke table.

❷ Motor mounting position

Nil	Top mounting
U	Bottom mounting

❻ Auto switch compatibility

Nil	None
C	With (Includes 1 mounting bracket)

∗ If 2 or more are required, please order them separately. (Part no.: LEF-D-2-1 For details, refer to page 86.)

∗ Order auto switches separately. (For details, refer to pages 87 to 89.)

∗ When "Nil" is selected, the product will not come with a built-in magnet for an auto switch, and so a mounting bracket cannot be secured. Be sure to select an appropriate model initially as the product cannot be changed to have auto switch compatibility after purchase.

❸ Mounting type

NZ	NW	NT
NY	NV	NM1
NX	NU	NM2

❹ Equivalent lead [mm]

S	54

❼ Positioning pin hole

Nil	Housing B bottom∗1	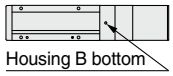 Housing B bottom
K	Body bottom 2 locations	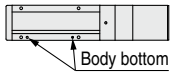 Body bottom

∗1 Refer to the body mounting example on page 91 for the mounting method.

Applicable Stroke Table

●: Standard/○: Produced upon receipt of order

	300	400	500	600	700	800	900	1000	1100	1200	1300	1400	1500	1600	1700	1800	1900	2000	2500	3000
LEFB25	●	●	●	●	●	●	●	●	○	●	○	○	●	○	○	○	○	●	—	—
LEFB32	●	●	●	●	●	●	●	●	○	●	○	○	●	○	○	○	○	●	●	—
LEFB40	●	●	●	●	●	●	●	●	○	●	○	○	●	○	○	○	○	●	●	●

∗ Please contact SMC as all non-standard and non-made-to-order strokes are produced as special orders.

Compatible Motors and Mounting Types∗1

Applicable motor model		Size/Mounting type													
Manufacturer	Series	25					32/40								
		NZ	NY	NX	NM1	NM2	NZ	NY	NX	NW	NV	NU	NT	NM1	NM2
Mitsubishi Electric Corporation	MELSERVO JN/J4/J5	●	—	—	—	—	●	—	—	—	—	—	—	—	—
YASKAWA Electric Corporation	Σ-V/7/X	●	—	—	—	—	●	—	—	—	—	—	—	—	—
SANYO DENKI CO., LTD.	SANMOTION R	●	—	—	—	—	●	—	—	—	—	—	—	—	—
OMRON Corporation	OMNUC G5/1S	●	—	—	—	—	—	●	—	—	—	—	—	—	—
Panasonic Corporation	MINAS A5/A6	● (MHMF only)	●	—	—	—	—	●	—	—	—	—	—	—	—
FANUC CORPORATION	βis (-B)	●	—	—	—	—	● (β1 only)	—	—	●	—	—	—	—	—
NIDEC SANKYO CORPORATION	S-FLAG	●	—	—	—	—	●	—	—	—	—	—	—	—	—
KEYENCE CORPORATION	SV/SV2	●	—	—	—	—	●	—	—	—	—	—	—	—	—
FUJI ELECTRIC CO., LTD.	ALPHA7	●	—	—	—	—	●	—	—	—	—	—	—	—	—
MinebeaMitsumi Inc.	Hybrid stepping motors	—	—	—	●	—	—	—	—	—	—	—	—	●	—
Shinano Kenshi Co., Ltd.	CSB-BZ	—	—	—	●	—	—	—	—	—	—	—	—	—	—
ORIENTAL MOTOR Co., Ltd.	α STEP AR/AZ	—	—	—	—	● (46 only)	—	—	—	—	—	—	—	—	●
FASTECH Co., Ltd.	Ezi-SERVO	—	—	—	●	—	—	—	—	—	—	—	—	●	—
Rockwell Automation, Inc. (Allen-Bradley)	Kinetix MP/VP/TL	● (TL only)	—	—	—	—	—	—	● (MP/VP only)	—	—	—	● (TL only)	—	—
Beckhoff Automation GmbH	AM 30/31/80/81	●	—	—	—	—	—	—	● (80/81 only)	—	● (30 only)	● (31 only)	—	—	—
Siemens AG	SIMOTICS S-1FK7	—	—	●	—	—	—	—	●	—	—	—	—	—	—
Delta Electronics, Inc.	ASDA-A2	●	—	—	—	—	●	—	—	—	—	—	—	—	—
ANCA Motion	AMD2000	●	—	—	—	—	●	—	—	—	—	—	—	—	—

∗1 The compatible motors and mounting types are typical examples. Select the mounting type after referring to the "Motor Mounting, Applicable Motor Dimensions" tables on the following "Dimensions" pages.

Specifications*2

- Values in this specifications table are the allowable values of the actuator body with the standard motor mounted.
- Do not use the actuator so that it exceeds these values.

Model			LEFB25	LEFB32	LEFB40
Actuator specifications	Stroke [mm]*1		300, 400, 500 600, 700, 800 900, 1000, (1100) 1200, (1300, 1400) 1500, (1600, 1700) (1800, 1900), 2000	300, 400, 500 600, 700, 800 900, 1000, (1100) 1200, (1300, 1400) 1500, (1600, 1700) (1800, 1900), 2000 2500	300, 400, 500 600, 700, 800 900, 1000, (1100) 1200, (1300, 1400) 1500, (1600, 1700) (1800, 1900), 2000 2500, 3000
	Work load [kg]	Horizontal	5	15	25
	Speed [mm/s]		2000		
	Pushing return to origin speed [mm/s]		30 or less		
	Positioning repeatability [mm]		±0.06		
	Lost motion [mm]*3		0.1 or less		
	Equivalent lead [mm]		54		
	Max. acceleration/deceleration [mm/s²]		20000*4		
	Impact/Vibration resistance [m/s²]		50/20		
	Actuation type		Belt		
	Guide type		Linear guide		
	Static allowable moment*5 [N·m]	Mep (Pitching)	27	46	110
		Mey (Yawing)	27	46	110
		Mer (Rolling)	52	101	207
	Operating temperature range [°C]		5 to 40		
	Operating humidity range [%RH]		90 or less (No condensation)		
	Enclosure		IP30		
Other specifications *6	Actuation unit weight [kg]		0.2	0.3	0.55
	Other inertia [kg·cm²]		0.1	0.2	0.25
	Friction coefficient		0.05		
	Mechanical efficiency		0.8		
Reference motor specifications *7	Motor type		AC servo motor (100 V/200 V)		
	Rated output capacity [W]		100	200	400
	Rated torque [N·m]		0.32	0.64	1.3

*1 Please contact SMC as all non-standard and non-made-to-order strokes are produced as special orders.
*2 Do not allow collisions at either end of the table traveling distance at a speed exceeding "pushing return to origin speed."
Additionally, when running the positioning operation, do not set within 3 mm of both ends.
*3 A reference value for correcting errors in reciprocal operation
*4 Maximum acceleration/deceleration changes according to the work load.
Refer to the "Work Load–Acceleration/Deceleration Graph (Guide)" for belt drive on page 65.
*5 The static allowable moment is the amount of static moment which can be applied to the actuator when it is stopped.
If the product is exposed to impact or repeated load, be sure to take adequate safety measures when using the product.
*6 Each value is only to be used as a guide to select a motor of the appropriate capacity.
*7 For other specifications, refer to the specifications of the motor that is to be installed.

Weight

Model	LEFB25																	
Stroke [mm]	300	400	500	600	700	800	900	1000	1100	1200	1300	1400	1500	1600	1700	1800	1900	2000
Product weight [kg]	2.5	2.75	3	3.25	3.5	3.75	4	4.25	4.5	4.75	5	5.25	5.5	5.75	6	6.25	6.5	6.75

Model	LEFB32																		
Stroke [mm]	300	400	500	600	700	800	900	1000	1100	1200	1300	1400	1500	1600	1700	1800	1900	2000	2500
Product weight [kg]	4.00	4.35	4.70	5.05	5.40	5.75	6.10	6.45	6.80	7.15	7.50	7.85	8.20	8.55	8.90	9.25	9.60	9.95	11.70

Model	LEFB40																			
Stroke [mm]	300	400	500	600	700	800	900	1000	1100	1200	1300	1400	1500	1600	1700	1800	1900	2000	2500	3000
Product weight [kg]	5.72	6.17	6.62	7.07	7.52	7.97	8.42	8.87	9.32	9.77	10.22	10.67	11.12	11.57	12.02	12.47	12.92	13.32	15.62	17.87

Refer to the "Motor Mounting" on page 83 for details about motor mounting and included parts.

Dimensions: Belt Drive

LEFB25/Motor top mounting type

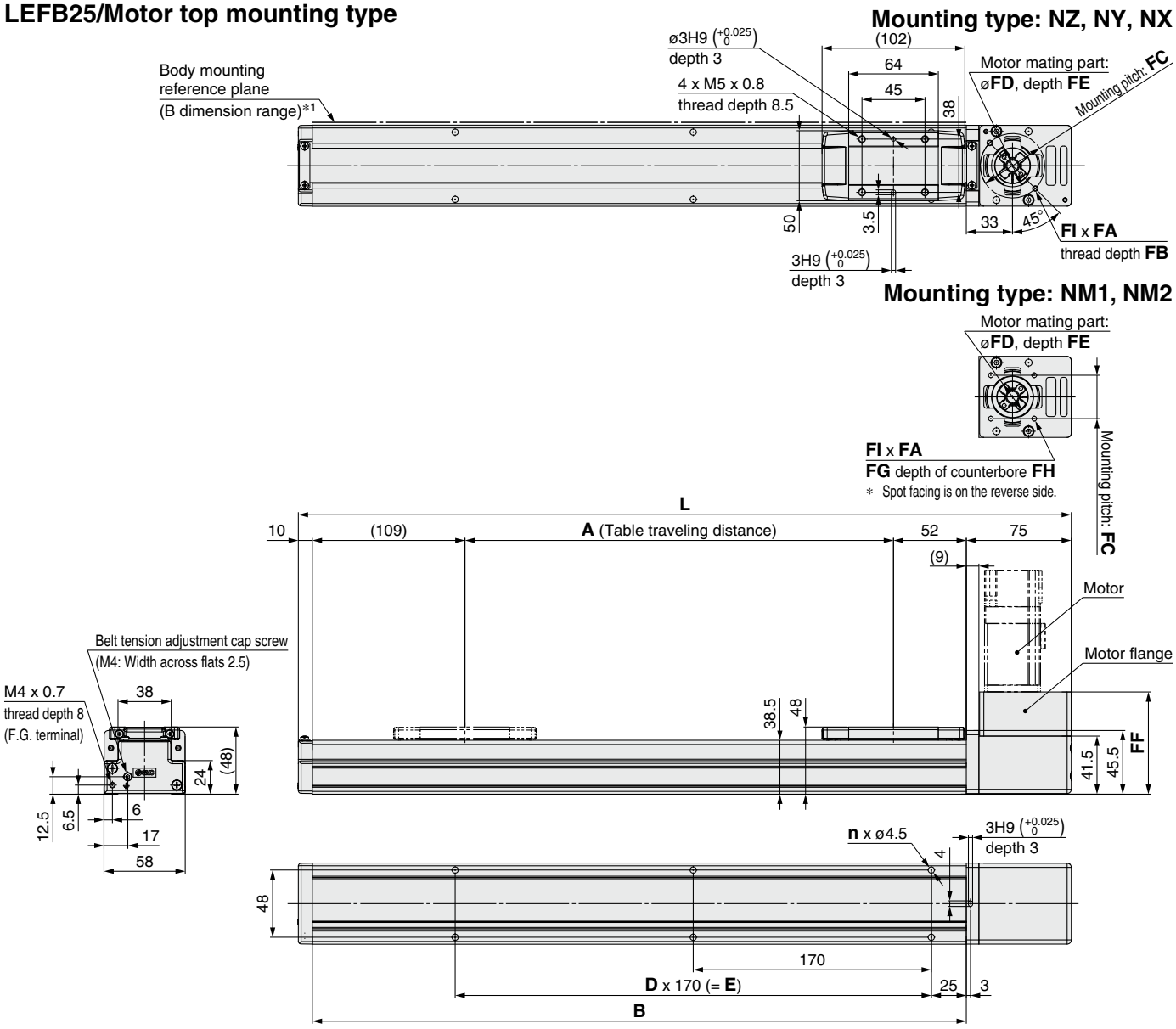

Applicable motor dimensions

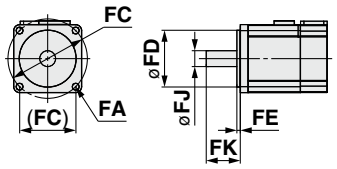

Dimensions

[mm]

Stroke	L	A	B	n	D	E
300	552	306	467	6	2	340
400	652	406	567	8	3	510
500	752	506	667	8	3	510
600	852	606	767	10	4	680
700	952	706	867	10	4	680
800	1052	806	967	12	5	850
900	1152	906	1067	14	6	1020
1000	1252	1006	1167	14	6	1020
1100	1352	1106	1267	16	7	1190
1200	1452	1206	1367	16	7	1190
1300	1552	1306	1467	18	8	1360
1400	1652	1406	1567	20	9	1530
1500	1752	1506	1667	20	9	1530
1600	1852	1606	1767	22	10	1700
1700	1952	1706	1867	22	10	1700
1800	2052	1806	1967	24	11	1870
1900	2152	1906	2067	24	11	1870
2000	2252	2006	2167	26	12	2040

*1 When mounting the actuator using the body mounting reference plane, set the height of the opposite surface or pin to be 3 mm or more. (Recommended height: 5 mm)

Motor Mounting, Applicable Motor Dimensions

[mm]

Mounting type	FA		FB	FC	FD	FE (Max.)	FF	FG	FH	FI	FJ	FK
	Mounting type	Applicable motor										
NZ	M4 x 0.7	ø4.5	8	ø46	30	3.5	73	—	—	2	8	25 ±1
NY	M3 x 0.5	ø3.4	8	ø45	30	3.5	73	—	—	4	8	25 ±1
NX	M4 x 0.7	ø4.5	8	ø46	30	3.5	73	—	—	2	8	18 ±1
NM1	ø3.4	M3	—	□31	22*1	2.5*1	73	6	21	4	5*2	18 to 25
NM2	ø3.4	M3	—	□31	22*1	2.5*1	73	6	21	4	6	20 ±1

*1 Dimensions after mounting a ring spacer (Refer to page 83.)
*2 Shaft type: D-cut shaft

Refer to the "Motor Mounting" on page 83 for details about motor mounting and included parts.

Dimensions: Belt Drive

LEFB25/Motor top mounting type

Positioning pin hole*1 (Option): Body bottom

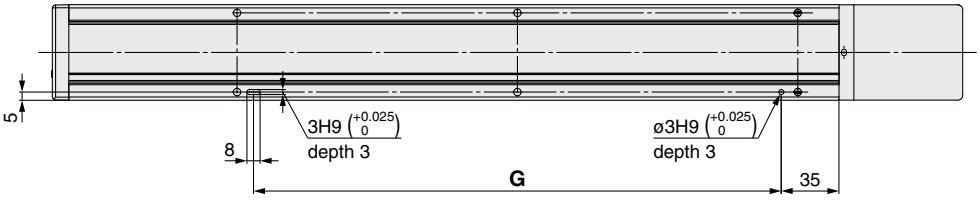

*1 When using the body bottom positioning pin holes, do not simultaneously use the housing B bottom pin hole.

With auto switch (Option)

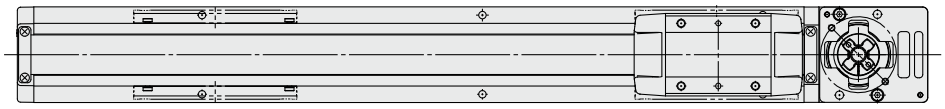

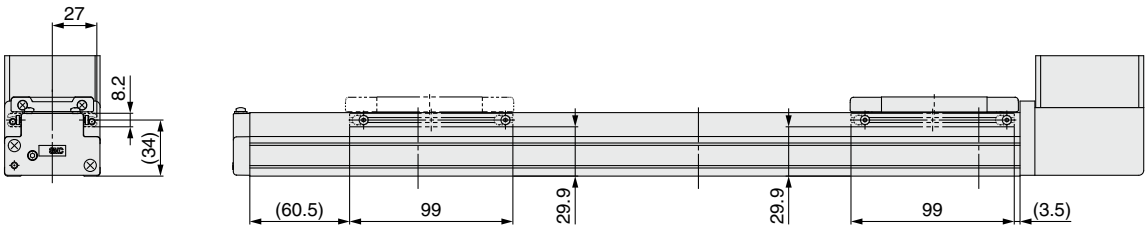

Dimensions [mm]

Stroke	G
300	320
400	490
500	490
600	660
700	660
800	830
900	1000
1000	1000
1100	1170
1200	1170
1300	1340
1400	1510
1500	1510
1600	1680
1700	1680
1800	1850
1900	1850
2000	2020

Refer to the "Motor Mounting" on page 83 for details about motor mounting and included parts.

Dimensions: Belt Drive

LEFB25U/Motor bottom mounting type

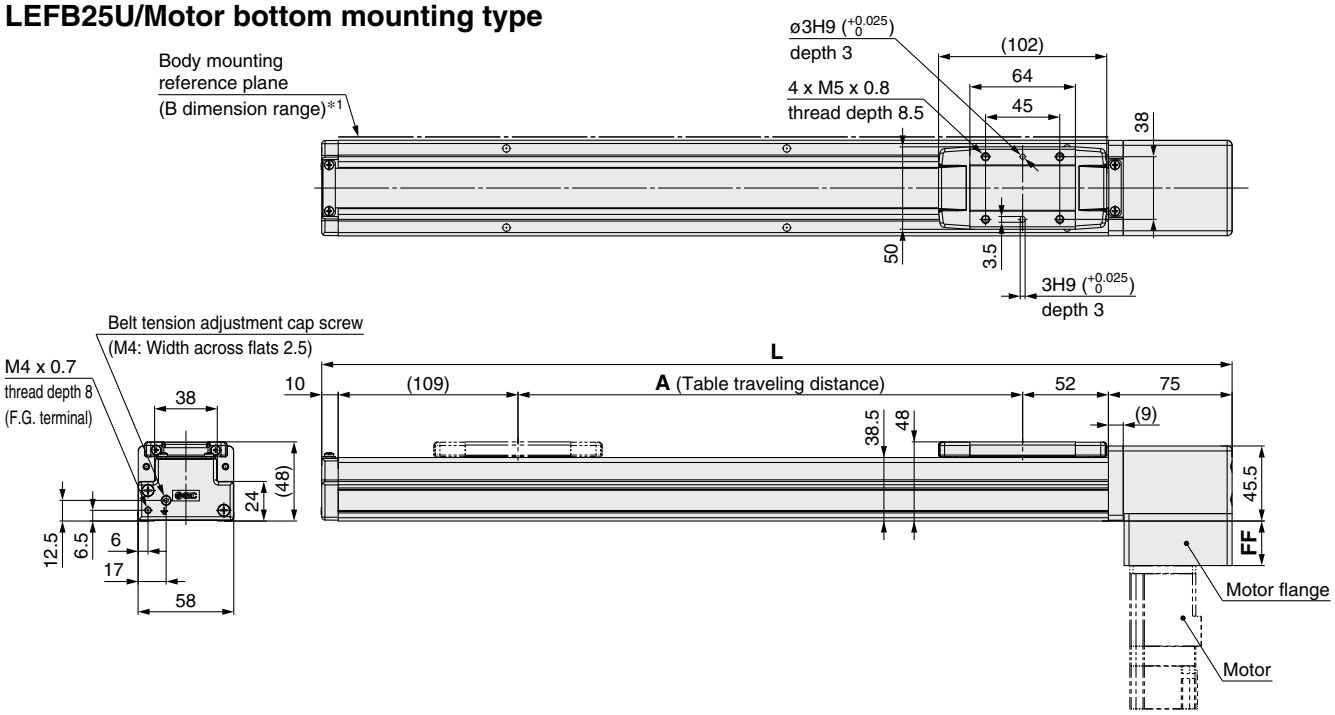

Mounting type: NZ, NY, NX

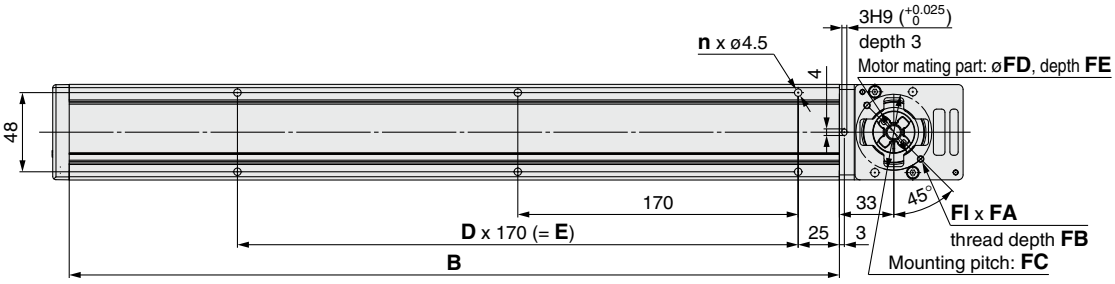

Mounting type: NM1, NM2

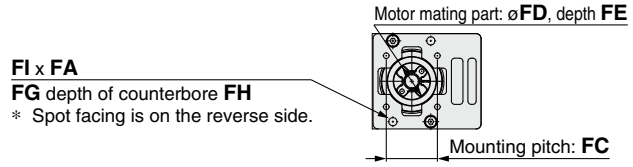

*1 When mounting the actuator using the body mounting reference plane, set the height of the opposite surface or pin to be 3 mm or more. (Recommended height: 5 mm)

Applicable motor dimensions

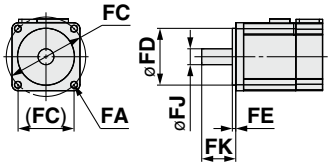

Dimensions

[mm]

Stroke	L	A	B	n	D	E
300	552	306	467	6	2	340
400	652	406	567	8	3	510
500	752	506	667	8	3	510
600	852	606	767	10	4	680
700	952	706	867	10	4	680
800	1052	806	967	12	5	850
900	1152	906	1067	14	6	1020
1000	1252	1006	1167	14	6	1020
1100	1352	1106	1267	16	7	1190
1200	1452	1206	1367	16	7	1190
1300	1552	1306	1467	18	8	1360
1400	1652	1406	1567	20	9	1530
1500	1752	1506	1667	20	9	1530
1600	1852	1606	1767	22	10	1700
1700	1952	1706	1867	22	10	1700
1800	2052	1806	1967	24	11	1870
1900	2152	1906	2067	24	11	1870
2000	2252	2006	2167	26	12	2040

Motor Mounting, Applicable Motor Dimensions

[mm]

Mounting type	FA		FB	FC	FD	FE (Max.)	FF	FG	FH	FI	FJ	FK
	Mounting type	Applicable motor										
NZ	M4 x 0.7	ø4.5	8	ø46	30	3.5	27	—	—	2	8	25 ±1
NY	M3 x 0.5	ø3.4	8	ø45	30	3.5	27	—	—	4	8	25 ±1
NX	M4 x 0.7	ø4.5	8	ø46	30	3.5	27	—	—	2	8	18 ±1
NM1	ø3.4	M3	—	□31	22*1	2.5*1	27	6	21	4	5*2	18 to 25
NM2	ø3.4	M3	—	□31	22*1	2.5*1	27	6	21	4	6	20 ±1

*1 Dimensions after mounting a ring spacer (Refer to page 83.)
*2 Shaft type: D-cut shaft

Refer to the "Motor Mounting" on page 83 for details about motor mounting and included parts.

Dimensions: Belt Drive

LEFB25U/Motor bottom mounting type

Positioning pin hole*1 (Option): Body bottom

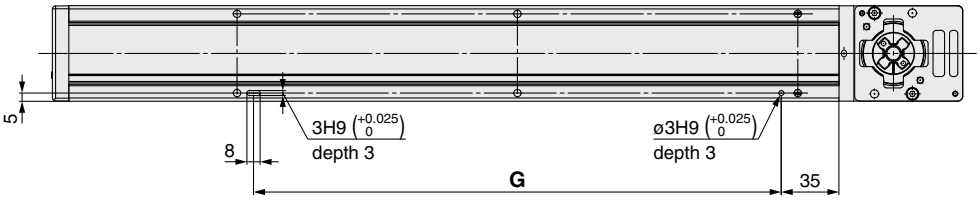

*1 When using the body bottom positioning pin holes, do not simultaneously use the housing B bottom pin hole.

With auto switch (Option)

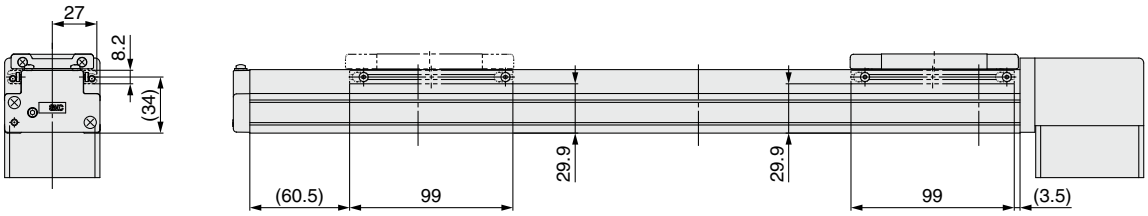

Dimensions [mm]

Stroke	G
300	320
400	490
500	490
600	660
700	660
800	830
900	1000
1000	1000
1100	1170
1200	1170
1300	1340
1400	1510
1500	1510
1600	1680
1700	1680
1800	1850
1900	1850
2000	2020

Dimensions: Belt Drive

Refer to the "Motor Mounting" on page 83 for details about motor mounting and included parts.

LEFB32/Motor top mounting type

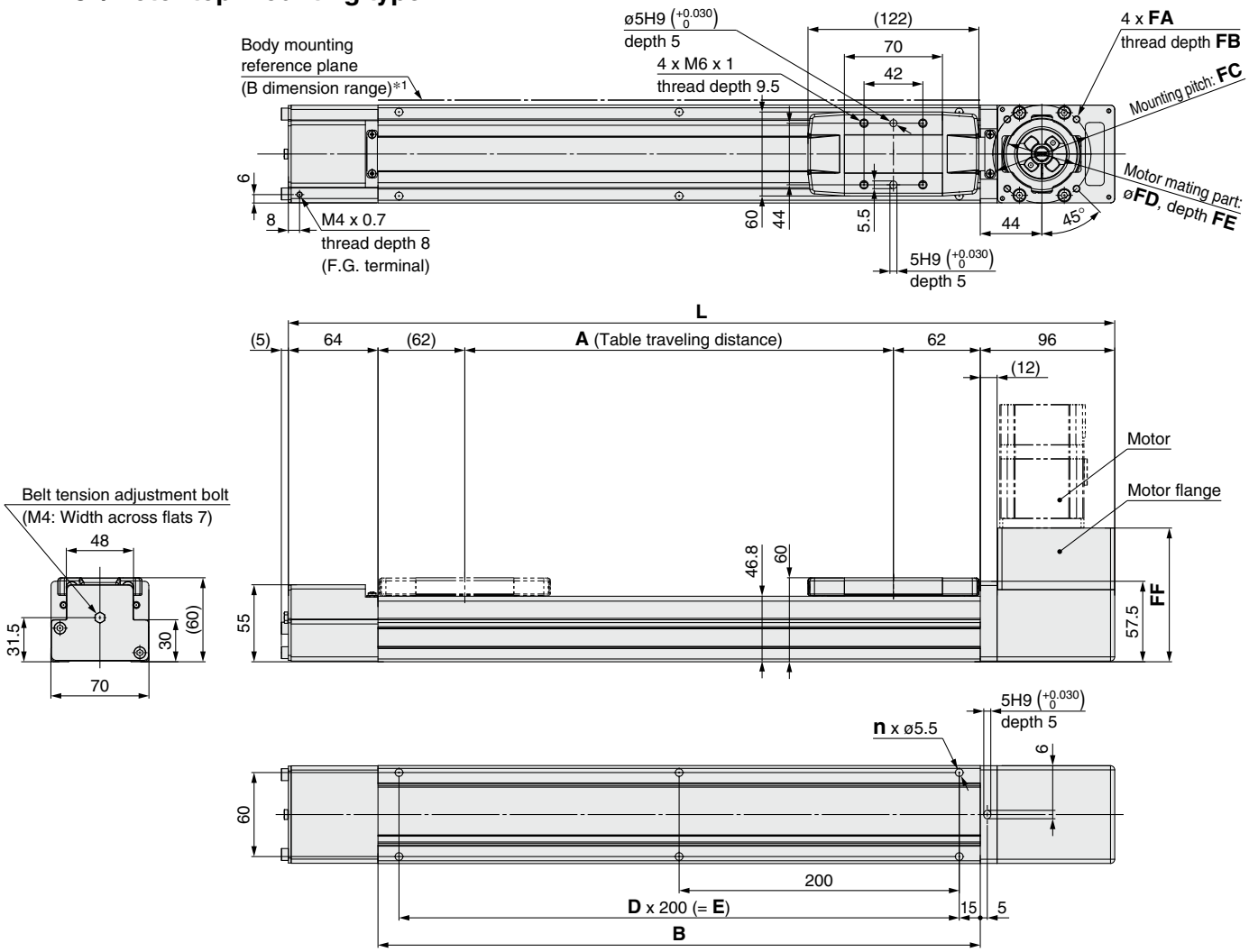

*1 When mounting the actuator using the body mounting reference plane, set the height of the opposite surface or pin to be 3 mm or more. (Recommended height: 5 mm)

Applicable motor dimensions

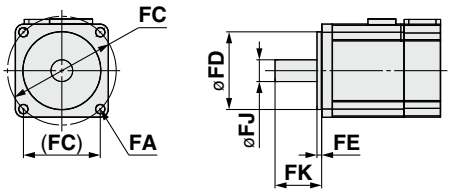

Dimensions

[mm]

Stroke	L	A	B	n	D	E
300	590	306	430	6	2	400
400	690	406	530	6	2	400
500	790	506	630	8	3	600
600	890	606	730	8	3	600
700	990	706	830	10	4	800
800	1090	806	930	10	4	800
900	1190	906	1030	12	5	1000
1000	1290	1006	1130	12	5	1000
1100	1390	1106	1230	14	6	1200
1200	1490	1206	1330	14	6	1200
1300	1590	1306	1430	16	7	1400
1400	1690	1406	1530	16	7	1400
1500	1790	1506	1630	18	8	1600
1600	1890	1606	1730	18	8	1600
1700	1990	1706	1830	20	9	1800
1800	2090	1806	1930	20	9	1800
1900	2190	1906	2030	22	10	2000
2000	2290	2006	2130	22	10	2000
2500	2790	2506	2630	28	13	2600

Motor Mounting, Applicable Motor Dimensions

[mm]

Mounting type	FA		FB	FC	FD	FE (Max.)	FF	FJ	FK
	Mounting type	Applicable motor							
NZ	M5 x 0.8	ø5.8	9	ø70	50	4	95.5	14	30 ±1
NY	M4 x 0.7	ø4.5	8	ø70	50	4	95.5	11	30 ±1
NX	M5 x 0.8	ø5.8	9	ø63	40*1	4.5*1	99.2	9	20 ±1
NW	M5 x 0.8	ø5.8	9	ø70	50	5	96.5	9	25 ±1
NV	M4 x 0.7	ø4.5	8	ø63	40*1	4.5*1	99.2	9	20 ±1
NU	M5 x 0.8	ø5.8	9	ø70	50	5	96.5	11	23 ±1
NT	M5 x 0.8	ø5.8	9	ø70	50	4	95.5	12	30 ±1
NM1	M4 x 0.7	ø4.5	8	□47.14	38.1*1	4.5*1	82.5	6.35*2	20 ±1
NM2	M4 x 0.7	ø4.5	8	□50	36*1	4.5*1	90.0	10	24 ±1

*1 Dimensions after mounting a ring spacer (Refer to page 83.)
*2 Shaft type: D-cut shaft

Refer to the "Motor Mounting" on page 83 for details about motor mounting and included parts.

Dimensions: Belt Drive

LEFB32/Motor top mounting type

Positioning pin hole*1 (Option): Body bottom

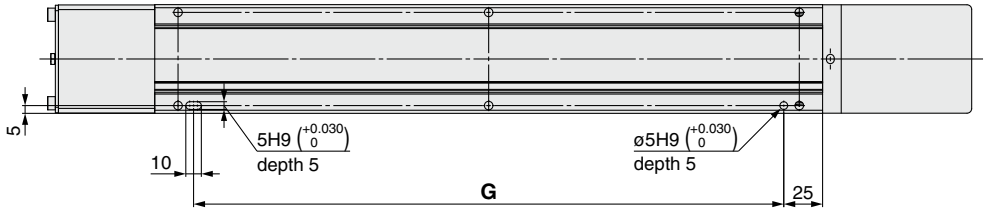

*1 When using the body bottom positioning pin holes, do not simultaneously use the housing B bottom pin hole.

With auto switch (Option)

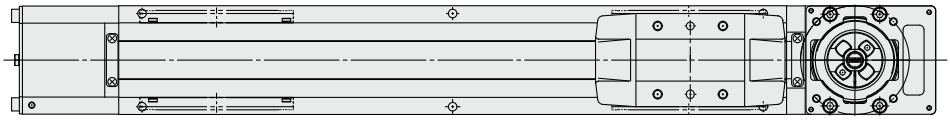

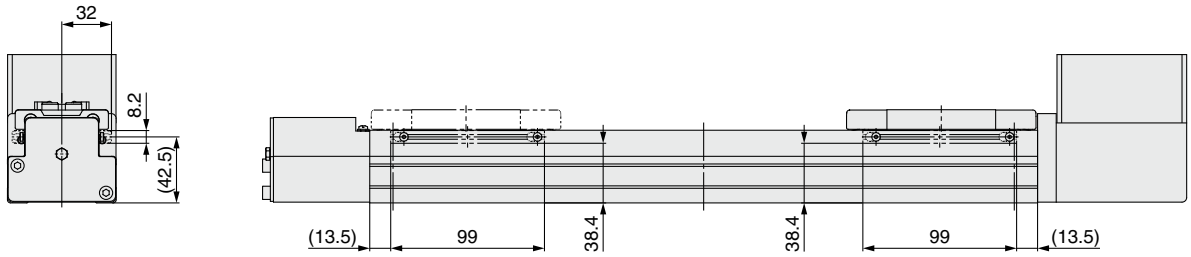

Dimensions [mm]

Stroke	G
300	380
400	380
500	580
600	580
700	780
800	780
900	980
1000	980
1100	1180
1200	1180
1300	1380
1400	1380
1500	1580
1600	1580
1700	1780
1800	1780
1900	1980
2000	1980
2500	2580

Refer to the "Motor Mounting" on page 83 for details about motor mounting and included parts.

Dimensions: Belt Drive

LEFB32U/Motor bottom mounting type

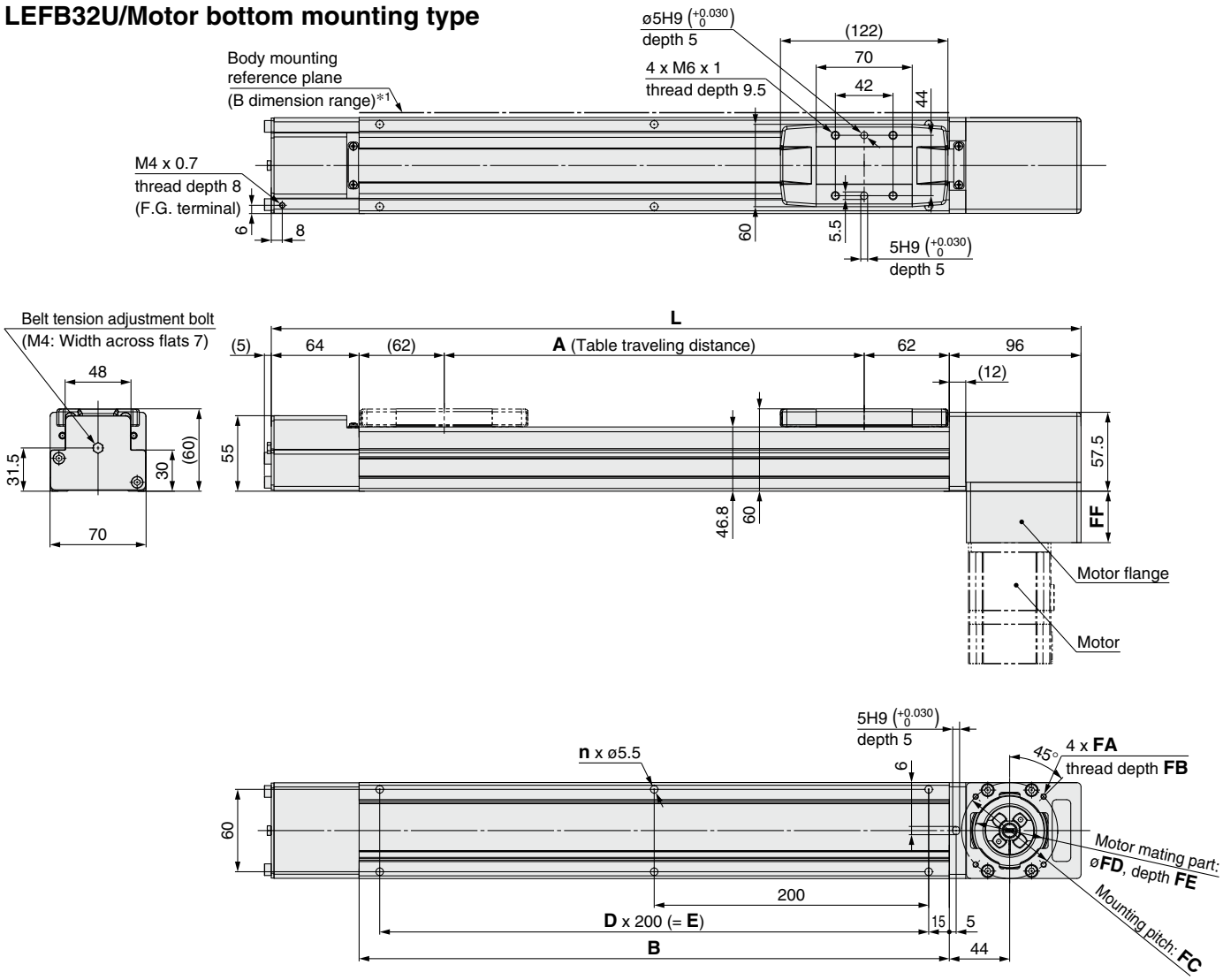

*1 When mounting the actuator using the body mounting reference plane, set the height of the opposite surface or pin to be 3 mm or more. (Recommended height: 5 mm)

Applicable motor dimensions

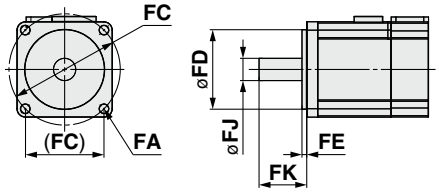

Dimensions

[mm]

Stroke	L	A	B	n	D	E
300	590	306	430	6	2	400
400	690	406	530	6	2	400
500	790	506	630	8	3	600
600	890	606	730	8	3	600
700	990	706	830	10	4	800
800	1090	806	930	10	4	800
900	1190	906	1030	12	5	1000
1000	1290	1006	1130	12	5	1000
1100	1390	1106	1230	14	6	1200
1200	1490	1206	1330	14	6	1200
1300	1590	1306	1430	16	7	1400
1400	1690	1406	1530	16	7	1400
1500	1790	1506	1630	18	8	1600
1600	1890	1606	1730	18	8	1600
1700	1990	1706	1830	20	9	1800
1800	2090	1806	1930	20	9	1800
1900	2190	1906	2030	22	10	2000
2000	2290	2006	2130	22	10	2000
2500	2790	2506	2630	28	13	2600

Motor Mounting, Applicable Motor Dimensions

[mm]

Mounting type	FA		FB	FC	FD	FE (Max.)	FF	FJ	FK
	Mounting type	Applicable motor							
NZ	M5 x 0.8	ø5.8	9	ø70	50	4	37.5	14	30 ±1
NY	M4 x 0.7	ø4.5	8	ø70	50	4	37.5	11	30 ±1
NX	M5 x 0.8	ø5.8	9	ø63	40*1	4.5*1	41.2	9	20 ±1
NW	M5 x 0.8	ø5.8	9	ø70	50	5	38.5	9	25 ±1
NV	M4 x 0.7	ø4.5	8	ø63	40*1	4.5*1	41.2	9	20 ±1
NU	M5 x 0.8	ø5.8	9	ø70	50	5	38.5	11	23 ±1
NT	M5 x 0.8	ø5.8	9	ø70	50	4	37.5	12	30 ±1
NM1	M4 x 0.7	ø4.5	8	□47.14	38.1*1	4.5*1	24.5	6.35*2	20 ±1
NM2	M4 x 0.7	ø4.5	8	□50	36*1	4.5*1	32.0	10	24 ±1

*1 Dimensions after mounting a ring spacer (Refer to page 83.)
*2 Shaft type: D-cut shaft

Refer to the "Motor Mounting" on page 83 for details about motor mounting and included parts.

Dimensions: Belt Drive

LEFB32U/Motor bottom mounting type

Positioning pin hole*1 (Option): Body bottom

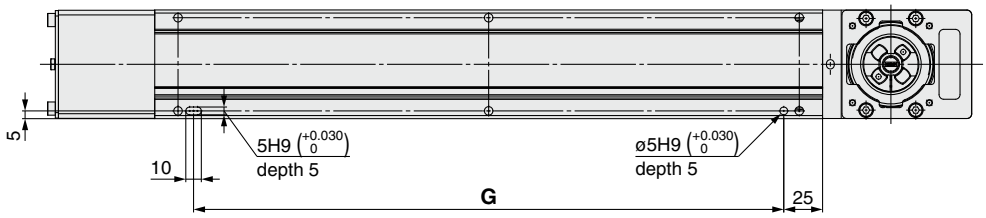

*1 When using the body bottom positioning pin holes, do not simultaneously use the housing B bottom pin hole.

With auto switch (Option)

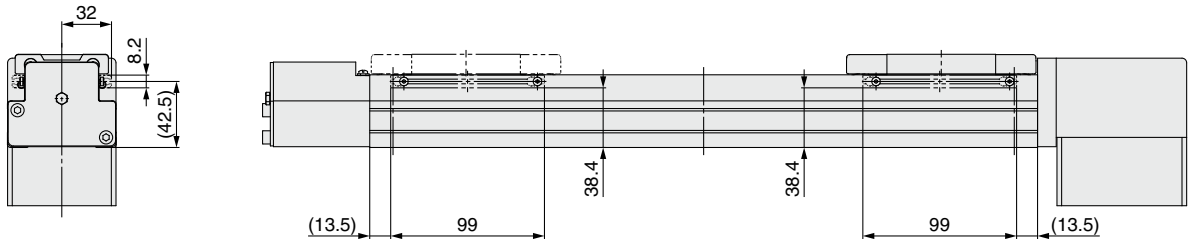

Dimensions [mm]

Stroke	G
300	380
400	380
500	580
600	580
700	780
800	780
900	980
1000	980
1100	1180
1200	1180
1300	1380
1400	1380
1500	1580
1600	1580
1700	1780
1800	1780
1900	1980
2000	1980
2500	2580

Refer to the "Motor Mounting" on page 83 for details about motor mounting and included parts.

Dimensions: Belt Drive

LEFB40/Motor top mounting type

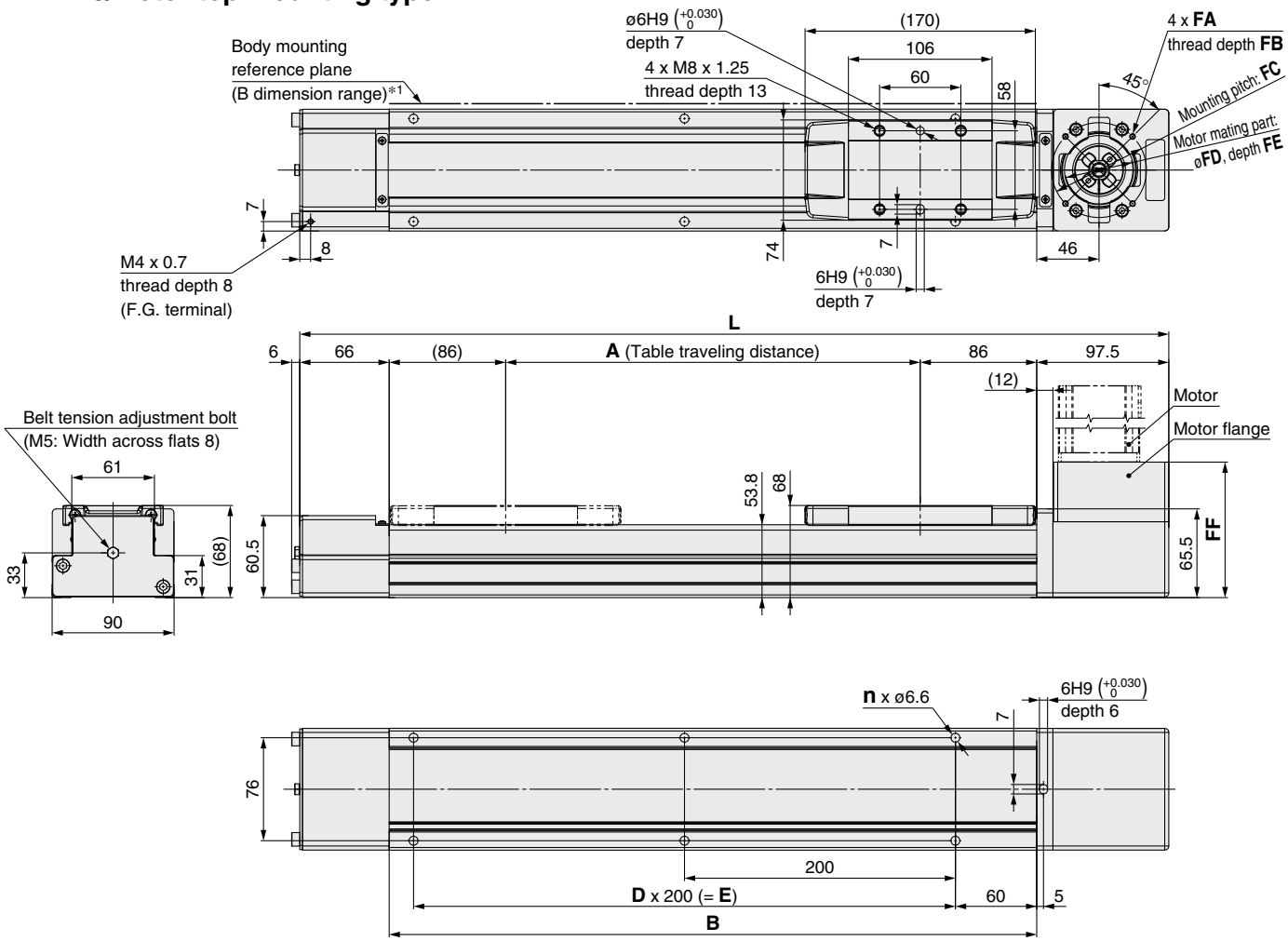

*1 When mounting the actuator using the body mounting reference plane, set the height of the opposite surface or pin to be 3 mm or more. (Recommended height: 5 mm)

Applicable motor dimensions

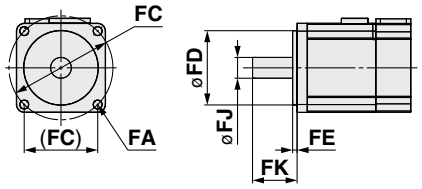

Dimensions

[mm]

Stroke	L	A	B	n	D	E
300	641.5	306	478	6	2	400
400	741.5	406	578	6	2	400
500	841.5	506	678	8	3	600
600	941.5	606	778	8	3	600
700	1041.5	706	878	10	4	800
800	1141.5	806	978	10	4	800
900	1241.5	906	1078	12	5	1000
1000	1341.5	1006	1178	12	5	1000
1100	1441.5	1106	1278	14	6	1200
1200	1541.5	1206	1378	14	6	1200
1300	1641.5	1306	1478	16	7	1400
1400	1741.5	1406	1578	16	7	1400
1500	1841.5	1506	1678	18	8	1600
1600	1941.5	1606	1778	18	8	1600
1700	2041.5	1706	1878	20	9	1800
1800	2141.5	1806	1978	20	9	1800
1900	2241.5	1906	2078	22	10	2000
2000	2341.5	2006	2178	22	10	2000
2500	2841.5	2506	2678	28	13	2600
3000	3341.5	3006	3178	32	15	3000

Motor Mounting, Applicable Motor Dimensions

[mm]

Mounting type	FA		FB	FC	FD	FE (Max.)	FF	FJ	FK
	Mounting type	Applicable motor							
NZ	M5 x 0.8	ø5.8	9	ø70	50	4	100	14	30 ±1
NY	M4 x 0.7	ø4.5	8	ø70	50	4	100	14	30 ±1
NX	M5 x 0.8	ø5.8	9	ø63	40*1	4.5*1	103.2	9	20 ±1
NW	M5 x 0.8	ø5.8	9	ø70	50	5	101	9	25 ±1
NV	M4 x 0.7	ø4.5	8	ø63	40*1	4.5*1	103.2	9	20 ±1
NU	M5 x 0.8	ø5.8	9	ø70	50	5	101	11	23 ±1
NT	M5 x 0.8	ø5.8	9	ø70	50	4	100	12	30 ±1
NM1	M4 x 0.7	ø4.5	8	□47.14	38.1*1	4.5*1	87	6.35*2	20 ±1
NM2	M4 x 0.7	ø4.5	8	□50	36*1	4.5*1	94.0	10	24 ±1

*1 Dimensions after mounting a ring spacer (Refer to page 83.)
*2 Shaft type: D-cut shaft

Refer to the "Motor Mounting" on page 83 for details about motor mounting and included parts.

Dimensions: Belt Drive

LEFB40/Motor top mounting type

Positioning pin hole*1 (Option): Body bottom

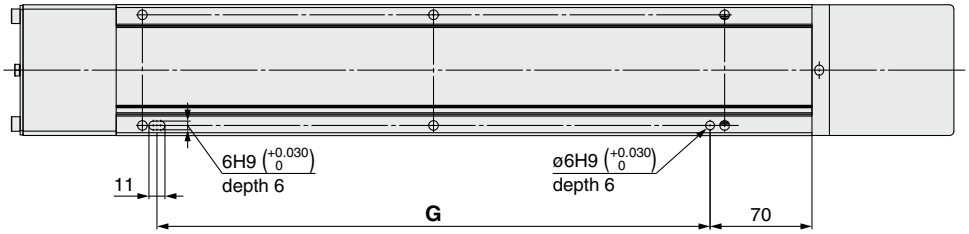

*1 When using the body bottom positioning pin holes, do not simultaneously use the housing B bottom pin hole.

With auto switch (Option)

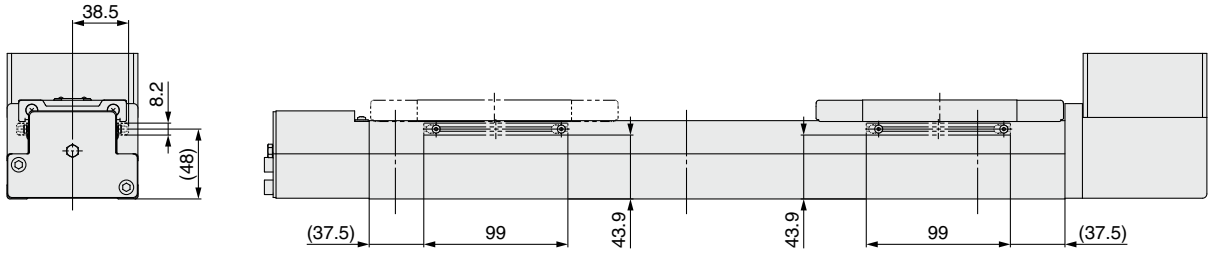

Dimensions [mm]

Stroke	G
300	380
400	380
500	580
600	580
700	780
800	780
900	980
1000	980
1100	1180
1200	1180
1300	1380
1400	1380
1500	1580
1600	1580
1700	1780
1800	1780
1900	1980
2000	1980
2500	2580
3000	2980

Refer to the "Motor Mounting" on page 83 for details about motor mounting and included parts.

Dimensions: Belt Drive

LEFB40U/Motor bottom mounting type

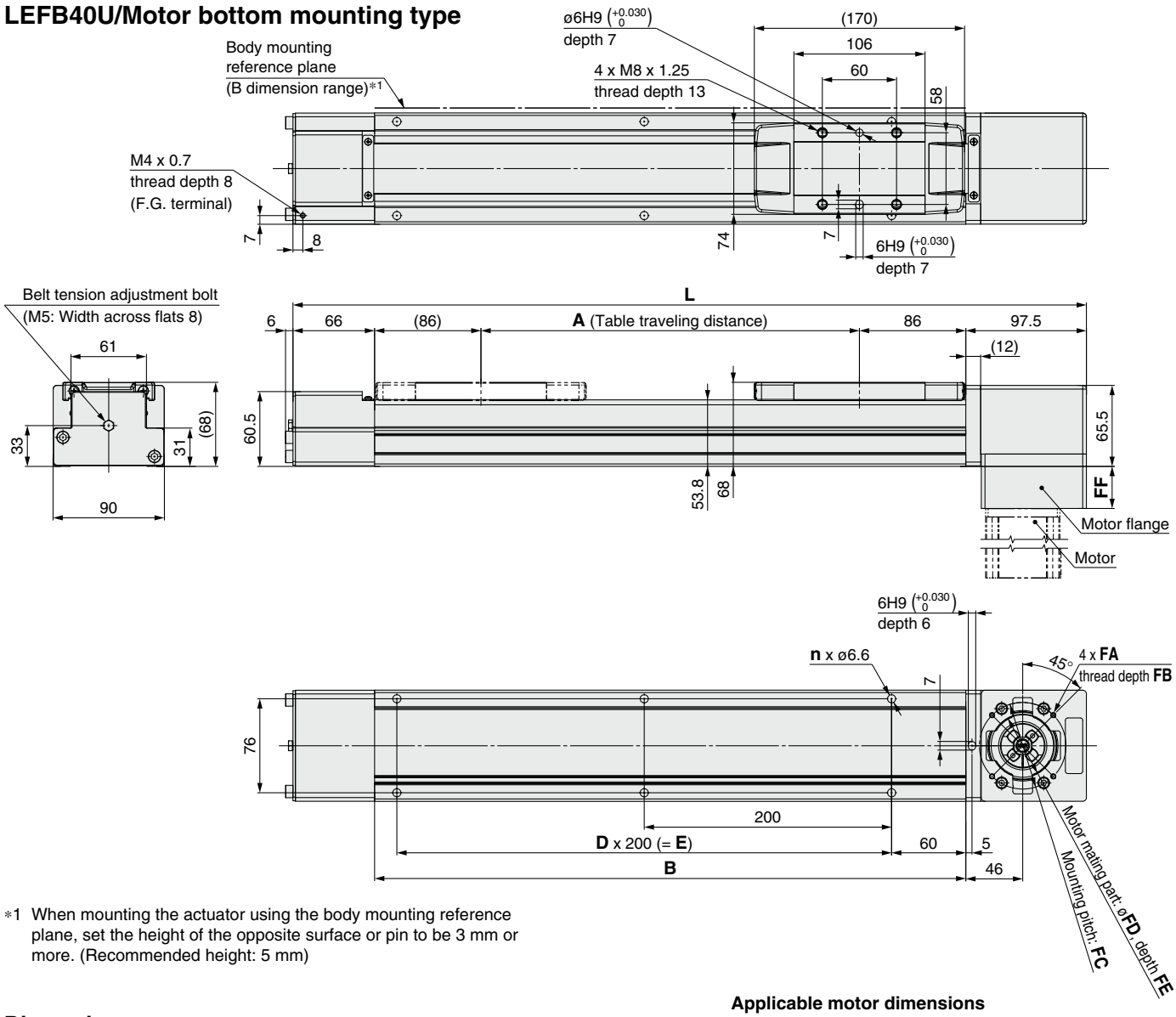

*1 When mounting the actuator using the body mounting reference plane, set the height of the opposite surface or pin to be 3 mm or more. (Recommended height: 5 mm)

Dimensions

[mm]

Stroke	L	A	B	n	D	E
300	641.5	306	478	6	2	400
400	741.5	406	578	6	2	400
500	841.5	506	678	8	3	600
600	941.5	606	778	8	3	600
700	1041.5	706	878	10	4	800
800	1141.5	806	978	10	4	800
900	1241.5	906	1078	12	5	1000
1000	1341.5	1006	1178	12	5	1000
1100	1441.5	1106	1278	14	6	1200
1200	1541.5	1206	1378	14	6	1200
1300	1641.5	1306	1478	16	7	1400
1400	1741.5	1406	1578	16	7	1400
1500	1841.5	1506	1678	18	8	1600
1600	1941.5	1606	1778	18	8	1600
1700	2041.5	1706	1878	20	9	1800
1800	2141.5	1806	1978	20	9	1800
1900	2241.5	1906	2078	22	10	2000
2000	2341.5	2006	2178	22	10	2000
2500	2841.5	2506	2678	28	13	2600
3000	3341.5	3006	3178	32	15	3000

Applicable motor dimensions

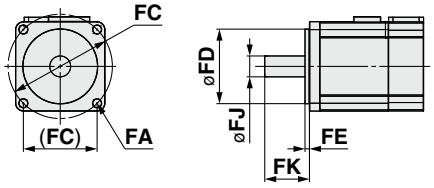

Motor Mounting, Applicable Motor Dimensions

[mm]

Mounting type	FA		FB	FC	FD	FE (Max.)	FF	FJ	FK
	Mounting type	Applicable motor							
NZ	M5 x 0.8	ø5.8	9	ø70	50	4	34	14	30 ±1
NY	M4 x 0.7	ø4.5	8	ø70	50	4	34	14	30 ±1
NX	M5 x 0.8	ø5.8	9	ø63	40*1	4.5*1	37.2	9	20 ±1
NW	M5 x 0.8	ø5.8	9	ø70	50	5	35	9	25 ±1
NV	M4 x 0.7	ø4.5	8	ø63	40*1	4.5*1	37.2	9	20 ±1
NU	M5 x 0.8	ø5.8	9	ø70	50	5	35	11	23 ±1
NT	M5 x 0.8	ø5.8	9	ø70	50	4	34	12	30 ±1
NM1	M4 x 0.7	ø4.5	8	□47.14	38.1*1	4.5*1	21	6.35*2	20 ±1
NM2	M4 x 0.7	ø4.5	8	□50	36*1	4.5*1	28.0	10	24 ±1

*1 Dimensions after mounting a ring spacer (Refer to page 83.)
*2 Shaft type: D-cut shaft

Refer to the "Motor Mounting" on page 83 for details about motor mounting and included parts.

Dimensions: Belt Drive

LEFB40U/Motor bottom mounting type

Positioning pin hole *1 (Option): Body bottom

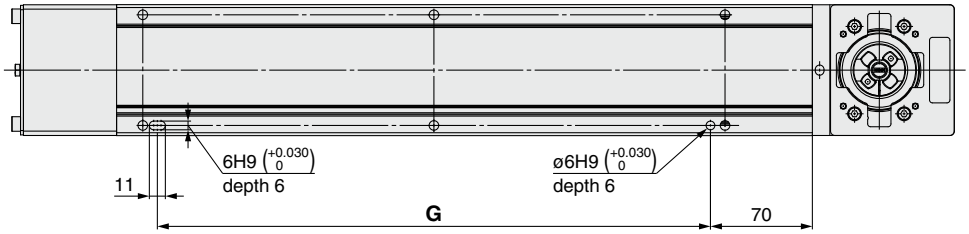

*1 When using the body bottom positioning pin holes, do not simultaneously use the housing B bottom pin hole.

With auto switch (Option)

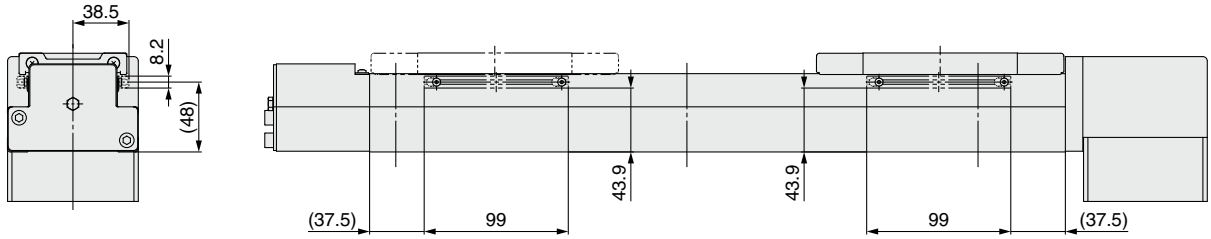

Dimensions [mm]

Stroke	G
300	380
400	380
500	580
600	580
700	780
800	780
900	980
1000	980
1100	1180
1200	1180
1300	1380
1400	1380
1500	1580
1600	1580
1700	1780
1800	1780
1900	1980
2000	1980
2500	2580
3000	2980

- When mounting a hub, remove all oil content, dust, and dirt adhered to the shaft and the inside of the hub.
- This product does not include the motor and motor mounting screws. (Provided by the customer)
- Prepare a motor with a round shaft end.
  For the "NM1," prepare a D-cut shaft.
- Take measures to prevent the loosening of the motor mounting screws and hexagon socket head set screws.

Motor Mounting

Mounting type: NZ, NY, NX, NW, NV, NU, NT, NM2

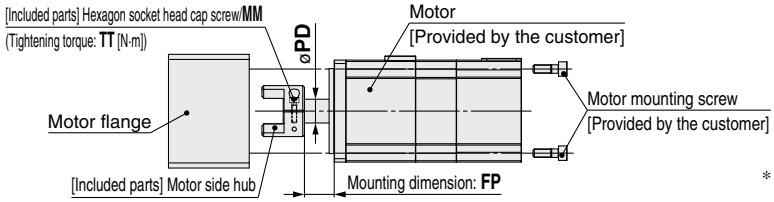

∗ Note for mounting a motor to the NM2 mounting type
Motor mounting screws for the LEFB25 are fixed starting from the motor flange side. (Opposite of the drawing)

Mounting type: NM1

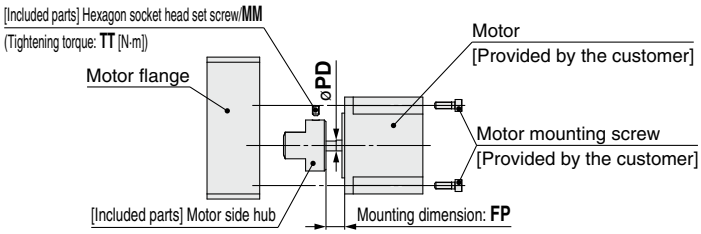

∗ Note for mounting a hub to the NM1 mounting type
When mounting the hub to the motor, make sure to position the set screw vertical to the D-cut surface of the motor shaft. (Refer to the figure shown below)

∗ Motor mounting screws for the LEFB25 are fixed starting from the motor flange side. (Opposite of the drawing)

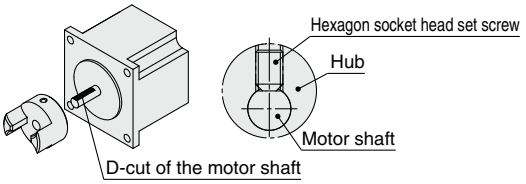

Motor Mounting Diagram

Mounting type: NZ, NY, NW, NU, NT

Mounting procedure

1) Secure the motor hub to the motor (provided by the customer) with the MM hexagon socket head cap screw.
2) Check the motor hub position, and then insert it. (Refer to the mounting diagram.)
3) Secure the motor to the motor flange with the motor mounting screws (provided by the customer).

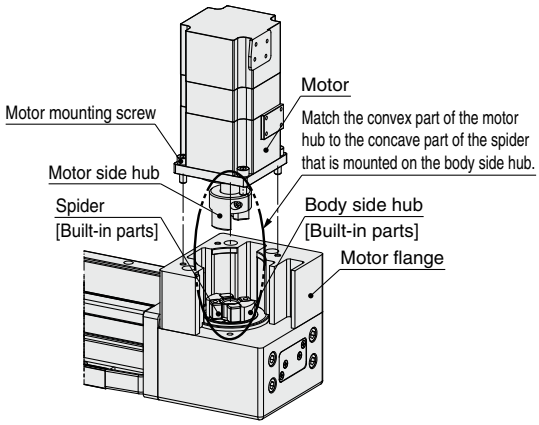

Mounting type: NX, NV, NM1, NM2

Mounting procedure

1) Secure the motor hub to the motor (provided by the customer) with the MM hexagon socket head cap screw (Mounting type: NX, NV, NM2) or MM hexagon socket head set screw (Mounting type: NM1).
2) Check the motor hub position, and then insert it. (Refer to the mounting diagram.)
3) Mount the ring spacer to the motor.
4) Secure the motor to the motor flange with the motor mounting screws (provided by the customer).

∗ For the LEFB25

4) Remove the motor flange, which has been temporarily mounted, from the housing B, and secure the motor to the motor flange using the motor mounting screws (that are to be prepared by the customer).
5) Tighten the motor flange to the housing B using motor flange mounting screws (included parts). (Tightening torque: 1.5 [N·m])

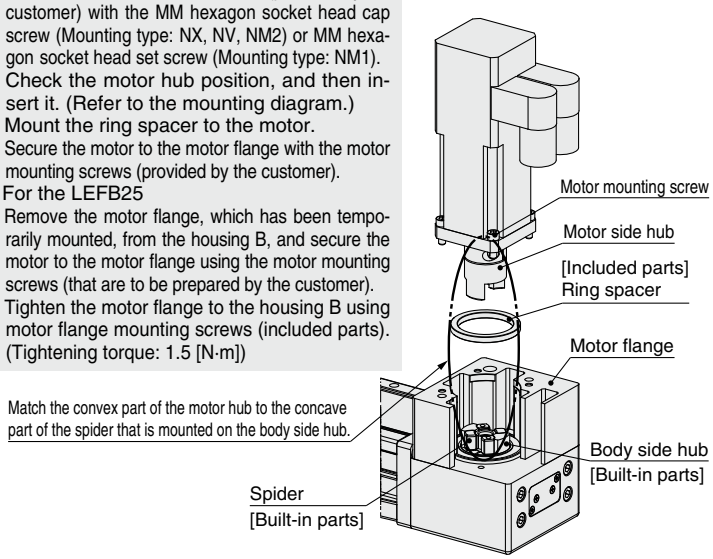

Size: 25 Hub Mounting Dimensions [mm]

Mounting type	MM	TT	PD	FP
NZ	M2.5 x 10	1.0	8	11
NY	M2.5 x 10	1.0	8	11
NX	M2.5 x 10	1.0	8	5.5
NM1	M3 x 4	0.63	5	11
NM2	M2.5 x 10	1.0	6	11

Size: 32 Hub Mounting Dimensions [mm]

Mounting type	MM	TT	PD	FP
NZ	M3 x 12	1.5	14	17.5
NY	M4 x 12	2.5	11	17.5
NX	M4 x 12	2.5	9	5.2
NW	M4 x 12	2.5	9	12.5
NV	M4 x 12	2.5	9	5.2
NU	M4 x 12	2.5	11	12.5
NT	M3 x 12	1.5	12	17.5
NM1	M4 x 5	1.5	6.35	4.5
NM2	M4 x 12	2.5	10	12

Size: 40 Hub Mounting Dimensions [mm]

Mounting type	MM	TT	PD	FP
NZ	M3 x 12	1.5	14	17.5
NY	M3 x 12	1.5	14	17.5
NX	M4 x 12	2.5	9	5.2
NW	M4 x 12	2.5	9	13
NV	M4 x 12	2.5	9	5.2
NU	M4 x 12	2.5	11	13
NT	M3 x 12	1.5	12	17.5
NM1	M4 x 5	1.5	6.35	5
NM2	M4 x 12	2.5	10	12

Included Parts List

Size: 25

Description	Quantity				
	Mounting type				
	NZ	**NY**	**NX**	**NM1**	**NM2**
Motor side hub	1	1	1	1	1
Hexagon socket head cap screw/set screw (to secure the hub)∗1	1	1	1	1	1
Hexagon socket head cap screw M4 x 30 (to secure the motor flange)	—	—	—	2	2
Ring spacer	—	—	—	1	1

∗1 For screw sizes, refer to the hub mounting dimensions.

Size: 32, 40

Description	Quantity								
	Mounting type								
	NZ	**NY**	**NX**	**NW**	**NV**	**NU**	**NT**	**NM1**	**NM2**
Motor side hub	1	1	1	1	1	1	1	1	1
Hexagon socket head cap screw/set screw (to secure the hub)∗1	1	1	1	1	1	1	1	1	1
Ring spacer	—	—	1	—	1	—	—	1	1

∗1 For screw sizes, refer to the hub mounting dimensions.

LEFB Series
Motor Mounting Parts

Motor Flange Option

After purchasing the product, the motor can be changed to the mounting types shown below by replacing with this option. (Except NM1)
Use the following part numbers to select a compatible motor flange option and place an order.

How to Order

LEF B – MF 25 – NZ

Belt drive ● ❶ ❷

❶ Size

25	For LEF□25
32	For LEF□32
40	For LEF□40

❷ Mounting type

NZ	NV
NY	NU
NX	NT
NW	NM2

∗ Select only NZ, NY, NX or NM2 for the LEFB-MF25.

Compatible Motors and Mounting Types∗1

Applicable motor model		Size/Mounting type													
Manufacturer	Series	25					32/40								
		NZ	NY	NX	NM1	NM2	NZ	NY	NX	NW	NV	NU	NT	NM1	NM2
Mitsubishi Electric Corporation	MELSERVO JN/J4/J5	●	—	—	—	—	●	—	—	—	—	—	—	—	—
YASKAWA Electric Corporation	Σ-V/7/X	●	—	—	—	—	●	—	—	—	—	—	—	—	—
SANYO DENKI CO., LTD.	SANMOTION R	●	—	—	—	—	●	—	—	—	—	—	—	—	—
OMRON Corporation	OMNUC G5/1S	●	—	—	—	—	—	●	—	—	—	—	—	—	—
Panasonic Corporation	MINAS A5/A6	● (MHMF only)	●	—	—	—	—	●	—	—	—	—	—	—	—
FANUC CORPORATION	βis (-B)	●	—	—	—	—	● (β1 only)	—	—	●	—	—	—	—	—
NIDEC SANKYO CORPORATION	S-FLAG	●	—	—	—	—	●	—	—	—	—	—	—	—	—
KEYENCE CORPORATION	SV/SV2	●	—	—	—	—	●	—	—	—	—	—	—	—	—
FUJI ELECTRIC CO., LTD.	ALPHA7	●	—	—	—	—	●	—	—	—	—	—	—	—	—
MinebeaMitsumi Inc.	Hybrid stepping motors	—	—	—	●	—	—	—	—	—	—	—	—	●	—
Shinano Kenshi Co., Ltd.	CSB-BZ	—	—	—	●	—	—	—	—	—	—	—	—	—	—
ORIENTAL MOTOR Co., Ltd.	α STEP AR/AZ	—	—	—	—	● (46 only)	—	—	—	—	—	—	—	—	●
FASTECH Co., Ltd.	Ezi-SERVO	—	—	—	●	—	—	—	—	—	—	—	—	●	—
Rockwell Automation, Inc. (Allen-Bradley)	Kinetix MP/VP/TL	● (TL only)	—	—	—	—	—	—	● (MP/VP only)	—	—	—	● (TL only)	—	—
Beckhoff Automation GmbH	AM 30/31/80/81	●	—	—	—	—	—	—	● (80/81 only)	—	● (30 only)	● (31 only)	—	—	—
Siemens AG	SIMOTICS S-1FK7	—	—	●	—	—	—	—	●	—	—	—	—	—	—
Delta Electronics, Inc.	ASDA-A2	●	—	—	—	—	●	—	—	—	—	—	—	—	—
ANCA Motion	AMD2000	●	—	—	—	—	●	—	—	—	—	—	—	—	—

∗1 The compatible motors and mounting types are typical examples. Select the mounting type after referring to the "Motor Mounting, Applicable Motor Dimensions" tables on the following actuator body "Dimensions" pages.
∗ When the LEF□25NM1□-□ is purchased, it is not possible to change to other mounting types.

Dimensions: Motor Flange Option

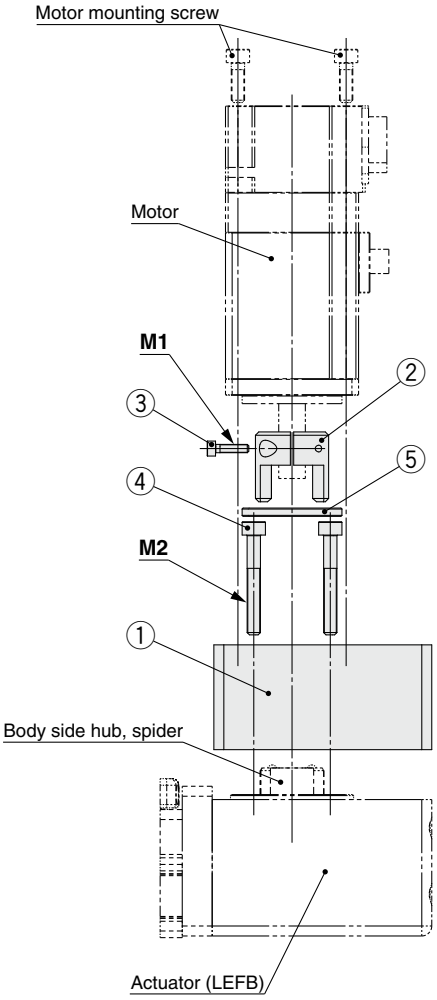

Component Parts

No.	Description	Quantity
1	**Motor flange**	1
2	**Hub (Motor side)**	1
3	**Hexagon socket head cap screw (to secure the hub)**	1
4	**Hexagon socket head cap screw (to mount the motor flange)**	2
5	**Ring spacer (Only for mounting types "NM2" in size 25 and "NX," "NV," and "NM2" in sizes 32 and 40)**	1

Motor flange details

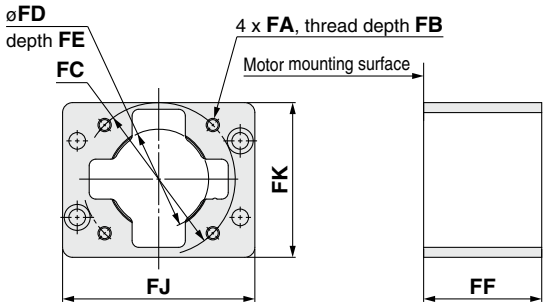

For NM2

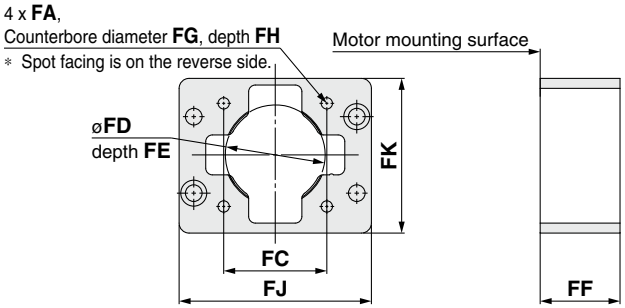

Dimensions

[mm]

Size	Mounting type	FA	FB	FC	FD	FE	FF	FG	FH	FJ	FK	M1	M2	PD
25	**NZ/NX**	M4 x 0.7	8	ø46	30	3.5	31.5	—	—	57.8	65.5	M2.5 x 10	M4 x 30	8
	NY	M3 x 0.5	8	ø45	30	3.5	31.5	—	—	57.8	65.5	M2.5 x 10	M4 x 30	8
	NM2	ø3.4	—	□31	22*1	2.5*1	31.5	6	21	57.8	65.5	M2.5 x 10	M4 x 30	6
32	**NZ**	M5 x 0.8	9	ø70	50	4	44	—	—	69.8	83.5	M3 x 12	M5 x 45	14
	NY	M4 x 0.7	8	ø70	50	4	44	—	—	69.8	83.5	M4 x 12	M5 x 45	11
	NX	M5 x 0.8	9	ø63	40*1	5	47.7	—	—	69.8	83.5	M4 x 12	M5 x 45	9
	NW	M5 x 0.8	9	ø70	50	5	45	—	—	69.8	83.5	M4 x 12	M5 x 45	9
	NV	M4 x 0.7	8	ø63	40*1	5	47.7	—	—	69.8	83.5	M4 x 12	M5 x 45	9
	NU	M5 x 0.8	9	ø70	50	5	45	—	—	69.8	83.5	M4 x 12	M5 x 45	11
	NT	M5 x 0.8	9	ø70	50	4	44	—	—	69.8	83.5	M3 x 12	M5 x 45	12
	NM2	M4 x 0.7	8	□50	36*1	4.5*1	38.5	—	—	69.8	83.5	M4 x 12	M5 x 25	10
40	**NZ**	M5 x 0.8	9	ø70	50	4	44	—	—	89.8	85	M3 x 12	M5 x 45	14
	NY	M4 x 0.7	8	ø70	50	4	44	—	—	89.8	85	M3 x 12	M5 x 45	14
	NX	M5 x 0.8	9	ø63	40*1	5	47.2	—	—	89.8	85	M4 x 12	M5 x 45	9
	NW	M5 x 0.8	9	ø70	50	5	45	—	—	89.8	85	M4 x 12	M5 x 45	9
	NV	M4 x 0.7	8	ø63	40*1	5	47.2	—	—	89.8	85	M4 x 12	M5 x 45	9
	NU	M5 x 0.8	9	ø70	50	5	45	—	—	89.8	85	M4 x 12	M5 x 45	11
	NT	M5 x 0.8	9	ø70	50	4	44	—	—	89.8	85	M3 x 12	M5 x 45	12
	NM2	M4 x 0.7	8	□50	36*1	4.5*1	38	—	—	89.8	85	M4 x 12	M5 x 25	10

*1 Dimensions after mounting a ring spacer

Auto Switch Mounting

Auto Switch Mounting Position

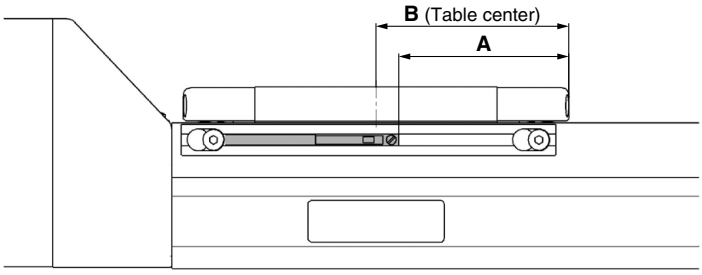

[mm]

Model	Size	A	B	Operating range
LEFS LEFB	25	45	51	4.9
	32	55	61	3.9
	40	79	85	5.3

∗ The applicable auto switch is D-M9 (N/P/B) (W) (M/L/Z).
∗ The operating range is a guideline including hysteresis, not meant to be guaranteed. There may be large variations depending on the ambient environment.
∗ Adjust the auto switch after confirming the operating conditions in the actual setting.

Auto Switch Mounting

Rotate the bolts for auto switch mounting bracket three to four times to loosen them (Removing them is not required), and slide and remove the auto switch mounting bracket. Then, insert a switch into the groove on the mounting bracket.
As the mounting bolts for installing the product body interfere with the auto switch mounting bracket, mount the auto switch mounting bracket after installing the product body. After installing product body, tighten the bolts for the auto switch mounting bracket.

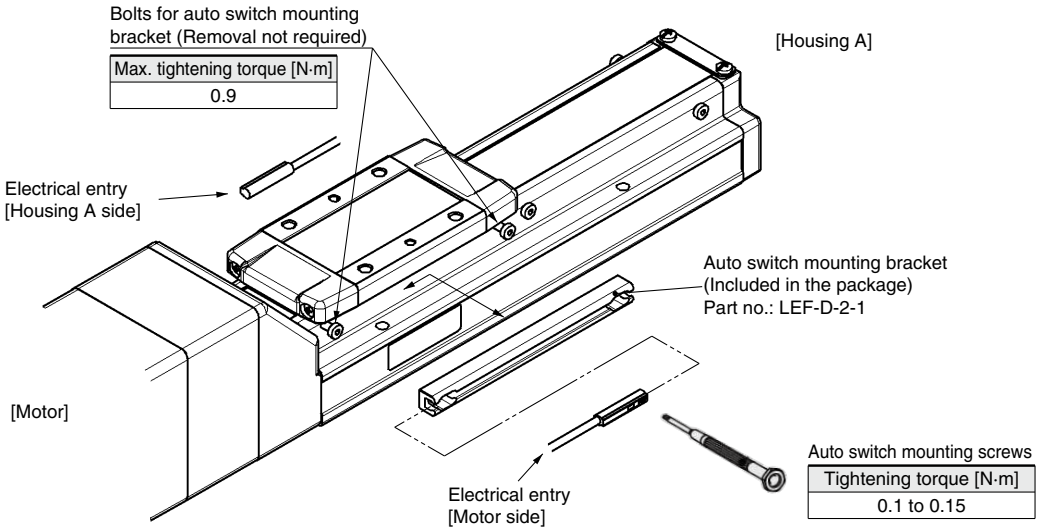

∗ The applicable auto switch is D-M9 (N/P/B) (W) (M/L/Z).
∗ The direction of the lead wire entry is specified. If it is mounted in the opposite direction, the auto switch may malfunction.
∗ Tighten the auto switch mounting screws (provided together with the auto switch), using a precision screwdriver with a handle diameter of approximately 5 to 6 mm.
∗ If more than two auto switch mounting brackets are required, please order them separately. All eight bolts for attaching the auto switch mounting bracket at the stroke end are tightened into the body when the product is shipped.
For strokes of 99 mm or less, only four bolts are tightened on the motor side.

Solid State Auto Switch Direct Mounting Type
D-M9N(V)/D-M9P(V)/D-M9B(V)

Refer to the SMC website for details on products that are compliant with international standards.

Grommet

- **2-wire load current is reduced (2.5 to 40 mA).**
- **Using flexible cable as standard spec.**

⚠Caution

Precautions

Fix the auto switch with the existing screw installed on the auto switch body. The auto switch may be damaged if a screw other than the one supplied is used.

Auto Switch Specifications

PLC: Programmable Logic Controller

D-M9□, D-M9□V (With indicator light)						
Auto switch model	D-M9N	D-M9NV	D-M9P	D-M9PV	D-M9B	D-M9BV
Electrical entry direction	In-line	Perpendicular	In-line	Perpendicular	In-line	Perpendicular
Wiring type	3-wire				2-wire	
Output type	NPN		PNP		—	
Applicable load	IC circuit, Relay, PLC				24 VDC relay, PLC	
Power supply voltage	5, 12, 24 VDC (4.5 to 28 V)				—	
Current consumption	10 mA or less				—	
Load voltage	28 VDC or less		—		24 VDC (10 to 28 VDC)	
Load current	40 mA or less				2.5 to 40 mA	
Internal voltage drop	0.8 V or less at 10 mA (2 V or less at 40 mA)				4 V or less	
Leakage current	100 μA or less at 24 VDC				0.8 mA or less	
Indicator light	Red LED illuminates when turned ON.					
Standards	CE/UKCA marking					

Oilproof Flexible Heavy-duty Lead Wire Specifications

Auto switch model		D-M9N(V)	D-M9P(V)	D-M9B(V)
Sheath	Outside diameter [mm]	ø2.6		
Insulator	Number of cores	3 cores (Brown/Blue/Black)		2 cores (Brown/Blue)
	Outside diameter [mm]	ø0.88		
Conductor	Effective area [mm²]	0.15		
	Strand diameter [mm]	ø0.05		
Min. bending radius [mm] (Reference values)		17		

∗ Refer to the **Web Catalog** for solid state auto switch common specifications.
∗ Refer to the **Web Catalog** for lead wire lengths.

Weight

[g]

Auto switch model		D-M9N(V)	D-M9P(V)	D-M9B(V)
Lead wire length	0.5 m (**Nil**)	8		7
	1 m (**M**)	14		13
	3 m (**L**)	41		38
	5 m (**Z**)	68		63

Dimensions

[mm]

D-M9□

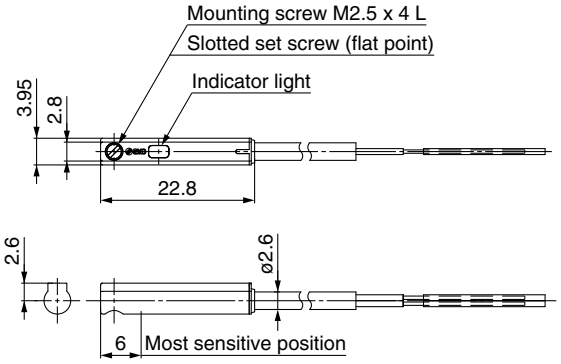

D-M9□V

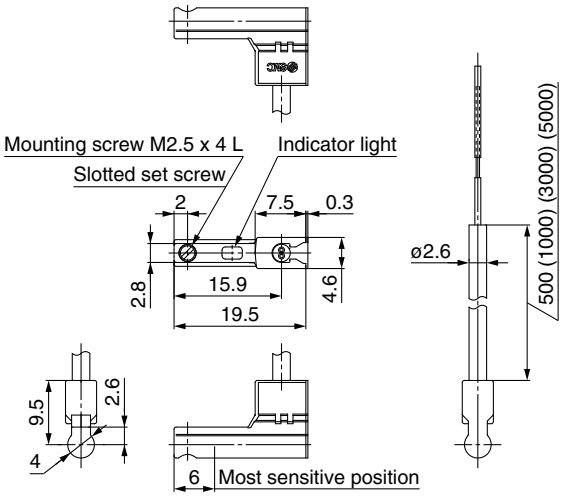

Normally Closed Solid State Auto Switch Direct Mounting Type
D-M9NE(V)/D-M9PE(V)/D-M9BE(V)

Refer to the SMC website for details on products that are compliant with international standards.

Grommet

- **Output signal turns on when no magnetic force is detected.**
- **Can be used for the actuator adopted by the solid state auto switch D-M9 series (excluding special order products)**

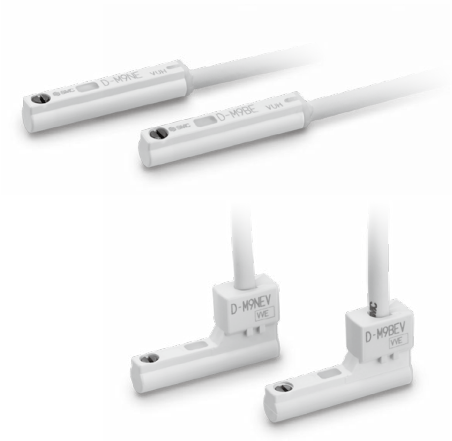

⚠Caution

Precautions

Fix the auto switch with the existing screw installed on the auto switch body. The auto switch may be damaged if a screw other than the one supplied is used.

Auto Switch Specifications

PLC: Programmable Logic Controller

D-M9□E, D-M9□EV (With indicator light)						
Auto switch model	D-M9NE	D-M9NEV	D-M9PE	D-M9PEV	D-M9BE	D-M9BEV
Electrical entry direction	In-line	Perpendicular	In-line	Perpendicular	In-line	Perpendicular
Wiring type	3-wire				2-wire	
Output type	NPN		PNP		—	
Applicable load	IC circuit, Relay, PLC				24 VDC relay, PLC	
Power supply voltage	5, 12, 24 VDC (4.5 to 28 V)				—	
Current consumption	10 mA or less				—	
Load voltage	28 VDC or less		—		24 VDC (10 to 28 VDC)	
Load current	40 mA or less				2.5 to 40 mA	
Internal voltage drop	0.8 V or less at 10 mA (2 V or less at 40 mA)				4 V or less	
Leakage current	100 μA or less at 24 VDC				0.8 mA or less	
Indicator light	Red LED illuminates when turned ON.					
Standards	CE/UKCA marking					

Oilproof Flexible Heavy-duty Lead Wire Specifications

Auto switch model		D-M9NE(V)	D-M9PE(V)	D-M9BE(V)
Sheath	Outside diameter [mm]	ø2.6		
Insulator	Number of cores	3 cores (Brown/Blue/Black)		2 cores (Brown/Blue)
	Outside diameter [mm]	ø0.88		
Conductor	Effective area [mm²]	0.15		
	Strand diameter [mm]	ø0.05		
Min. bending radius [mm] (Reference values)		17		

∗ Refer to the **Web Catalog** for solid state auto switch common specifications.
∗ Refer to the **Web Catalog** for lead wire lengths.

Weight

[g]

Auto switch model		D-M9NE(V)	D-M9PE(V)	D-M9BE(V)
Lead wire length	0.5 m (**Nil**)	8		7
	1 m (**M**)∗1	14		13
	3 m (**L**)	41		38
	5 m (**Z**)∗1	68		63

∗1 The 1 m and 5 m options are produced upon receipt of order.

Dimensions

[mm]

D-M9□E

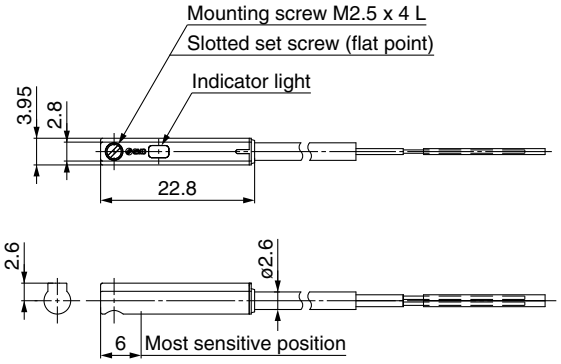

D-M9□EV

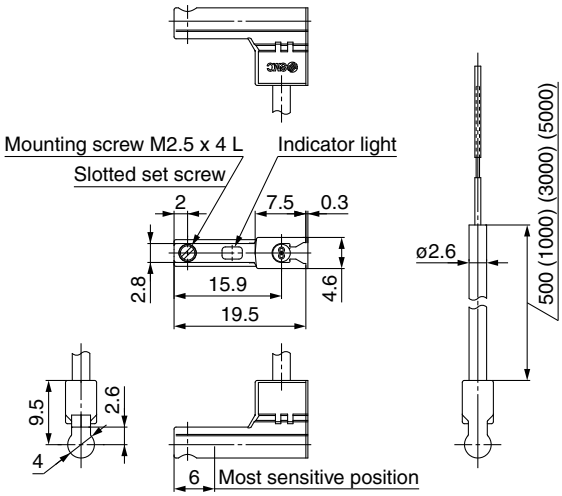

2-Color Indicator Solid State Auto Switch Direct Mounting Type
D-M9NW/D-M9PW/D-M9BW

Refer to the SMC website for details on products that are compliant with international standards.

Grommet

- **2-wire load current is reduced (2.5 to 40 mA).**
- **Using flexible cable as standard spec.**
- **The proper operating range can be determined by the color of the light. (Red → Green ← Red)**

⚠Caution

Precautions

Fix the auto switch with the existing screw installed on the auto switch body. The auto switch may be damaged if a screw other than the one supplied is used.

Auto Switch Specifications

PLC: Programmable Logic Controller

D-M9□W, D-M9□WV (With indicator light)			
Auto switch model	D-M9NW	D-M9PW	D-M9BW
Electrical entry direction	In-line		
Wiring type	3-wire		2-wire
Output type	NPN	PNP	—
Applicable load	IC circuit, Relay, PLC		24 VDC relay, PLC
Power supply voltage	5, 12, 24 VDC (4.5 to 28 V)		—
Current consumption	10 mA or less		—
Load voltage	28 VDC or less	—	24 VDC (10 to 28 VDC)
Load current	40 mA or less		2.5 to 40 mA
Internal voltage drop	0.8 V or less at 10 mA (2 V or less at 40 mA)		4 V or less
Leakage current	100 μA or less at 24 VDC		0.8 mA or less
Indicator light	Operating range ····· Red LED illuminates. Proper operating range ····· Green LED illuminates.		
Standards	CE/UKCA marking		

Oilproof Flexible Heavy-duty Lead Wire Specifications

Auto switch model		D-M9NW	D-M9PW	D-M9BW
Sheath	Outside diameter [mm]	ø2.6		
Insulator	Number of cores	3 cores (Brown/Blue/Black)		2 cores (Brown/Blue)
	Outside diameter [mm]	ø0.88		
Conductor	Effective area [mm²]	0.15		
	Strand diameter [mm]	ø0.05		
Min. bending radius [mm] (Reference values)		17		

∗ Refer to the **Web Catalog** for solid state auto switch common specifications.
∗ Refer to the **Web Catalog** for lead wire lengths.

Weight

[g]

Auto switch model		D-M9NW	D-M9PW	D-M9BW
Lead wire length	0.5 m (**Nil**)	8		7
	1 m (**M**)	14		13
	3 m (**L**)	41		38
	5 m (**Z**)	68		63

Dimensions

[mm]

D-M9□W

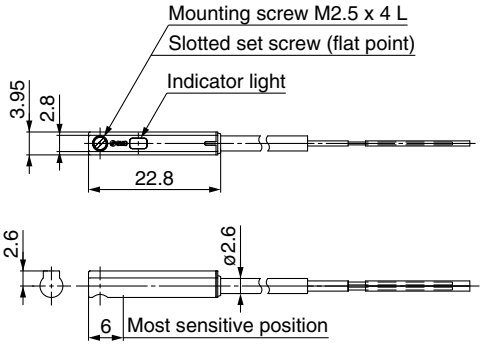

LEF Series
Specific Product Precautions 1

Be sure to read this before handling the products. Refer to the back cover for safety instructions. For electric actuator and auto switch precautions, refer to the "Handling Precautions for SMC Products" and the "Operation Manual" on the SMC website: https://www.smcworld.com

Design

⚠Caution

1. Do not apply a load in excess of the specification limits.

Select a suitable actuator by work load and allowable moment. If a load in excess of the specification limits is applied to the guide, adverse effects such as the generation of play in the guide, reduced accuracy, or reduced service life of the product may occur.

2. Do not use the product in applications where excessive external force or impact force is applied to it.

This can cause a malfunction.

Selection

⚠Warning

1. Do not increase the speed in excess of the specification limits.

Select a suitable actuator by the relationship of the allowable work load and speed, and the allowable speed of each stroke. If the product is used outside of the specification limits, adverse effects such as the generation of noise, reduced accuracy, or reduced service life of the product may occur.

2. Do not use the product in applications where excessive external force or impact force is applied to it.

This can cause a malfunction.

3. When the product repeatedly cycles with partial strokes (see the table below), operate it at a full stroke at least once every few dozens of cycles.

Failure to do so may result in the product running out of lubrication.

Model	Partial stroke
LEF□25	65 mm or less
LEF□32	70 mm or less
LEF□40	105 mm or less

4. When external force is to be applied to the table, it is necessary to add the external force to the work load as the total carried load when selecting a size.

When a cable duct or flexible moving tube is attached to the actuator, the sliding resistance of the table will increase, which may lead to the malfunction of the product.

5. Depending on the shape of the motor to be mounted, some of the product's interior parts (hub, spider, etc.) may be visible from the motor mounting surface. If this is undesirable, please contact your nearest sales office for details on options such as covers.

Handling

⚠Caution

1. Never allow the table to collide with the stroke end.

When the driver parameters, origin or programs are set incorrectly, the table may collide with the stroke end of the actuator during operation. Be sure to check these points before use.
If the table collides with the stroke end of the actuator, the guide, ball screw, belt, or internal stopper may break. This can result in abnormal operation.

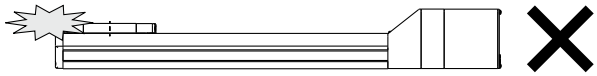

Handle the actuator with care when it is used in the vertical direction as the workpiece will fall freely from its own weight.

2. The actual speed of this actuator is affected by the work load and stroke.

Check the model selection section of the catalog.

3. Do not apply a load, impact, or resistance in addition to the transferred load during return to origin.

4. Do not dent, scratch, or cause other damage to the body or table mounting surfaces.

Doing so may cause unevenness in the mounting surface, play in the guide, or an increase in the sliding resistance.

5. Do not apply strong impact or an excessive moment while mounting a workpiece.

If an external force over the allowable moment is applied, it may cause play in the guide or an increase in the sliding resistance.

6. Keep the flatness of the mounting surface within 0.1 mm/500 mm.

If a workpiece or base does not sit evenly on the body of the product, play in the guide or an increase in the sliding resistance may occur.

7. Do not allow a workpiece to collide with the table during the positioning operation or within the positioning range.

8. Grease is applied to the dust seal band for sliding. When wiping off the grease to remove foreign matter, etc., be sure to apply it again.

9. When bottom mounted, the dust seal band may become warped.

LEF Series
Specific Product Precautions 2

Be sure to read this before handling the products. Refer to the back cover for safety instructions. For electric actuator and auto switch precautions, refer to the "Handling Precautions for SMC Products" and the "Operation Manual" on the SMC website: https://www.smcworld.com

Handling

⚠Caution

10. When mounting the product, use screws of adequate length and tighten them with adequate torque.

Tightening the screws with a higher torque than recommended may result in a malfunction, while tightening with a lower torque can result in the displacement of the mounting position or, in extreme conditions, the actuator could become detached from its mounting position.

Body fixed

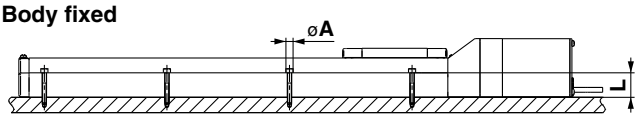

Model	Screw size	Max. tightening torque [N·m]	øA [mm]	L [mm]
LEF□25	M4	1.5	4.5	24
LEF□32	M5	3.0	5.5	30
LEF□40	M6	5.2	6.6	31

Body mounting

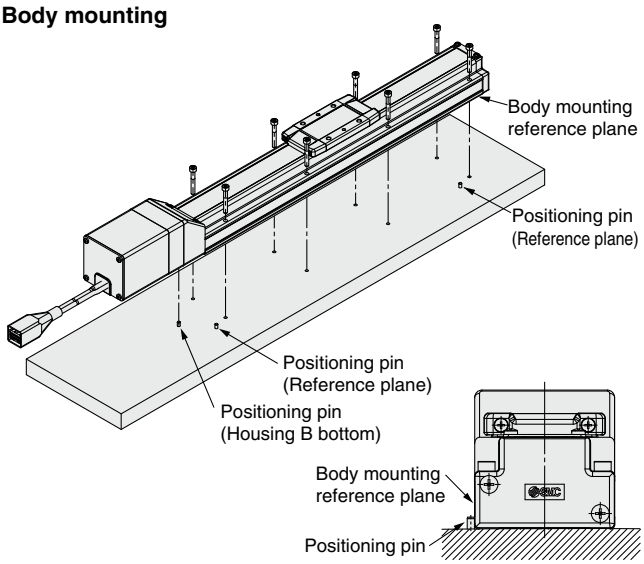

The traveling parallelism is the reference plane for the body mounting reference plane. If the traveling parallelism for a table is required, set the reference plane against parallel pins, etc.

Workpiece fixed

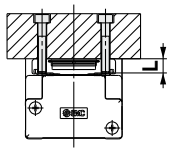

Model	Screw size	Max. tightening torque [N·m]	L (Max. screw-in depth) [mm]
LEF□25	M5 x 0.8	3.0	8
LEF□32	M6 x 1	5.2	9
LEF□40	M8 x 1.25	12.5	13

To prevent the workpiece retaining screws from touching the body, use screws that are 0.5 mm or shorter than the maximum screw-in depth. If long screws are used, they may touch the body and cause a malfunction.

11. Do not operate by fixing the table and moving the actuator body.

12. The belt drive actuator cannot be used for vertical applications.

13. Check the specifications for the minimum speed of each actuator.

Failure to do so may result in unexpected malfunctions such as knocking.

14. In the case of the belt drive actuator, vibration may occur during operation at speeds within the actuator specifications due to the operating conditions. Change the speed setting to a speed that does not cause vibration.

Maintenance

⚠Warning

Maintenance frequency

Perform maintenance according to the table below.

Frequency	Appearance check	Internal check
Inspection before daily operation	○	—
Inspection every 6 months/1000 km/ 5 million cycles*1	○	○

*1 Select whichever comes first.

- **Items for visual appearance check**
  1. Loose set screws, Abnormal amount of dirt, etc.
  2. Check for visible damage, Check of cable joint
  3. Vibration, Noise
- **Items for internal check**
  1. Lubricant condition on moving parts
  2. Loose or mechanical play in fixed parts or fixing screws

High Rigidity Slider Type

Ball Screw Drive *LEJS* Series

p. 93

Model Selection

LEJS Series ▶p. 105 LEJS-M Series ▶p. 109

Selection Procedure

Step 1 Check the speed–work load. → **Step 2** Check the cycle time. → **Step 3** Check the allowable moment.

Selection Example

The model selection method shown below corresponds to SMC's standard motor. For use in combination with a motor from a different manufacturer, check the available product information of the motor to be used.

Operating conditions

- Work load: 60 [kg]
- Speed: 300 [mm/s]
- Acceleration/Deceleration: 3000 [mm/s²]
- Stroke: 300 [mm]
- Mounting orientation: Horizontal
- External force: 10 [N]
- Workpiece mounting condition:

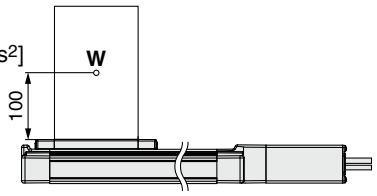

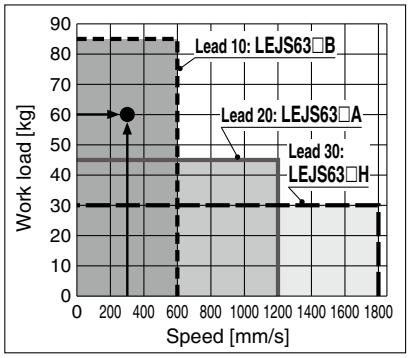

<Speed–Work Load Graph> (LEJS63)

Step 1 Check the speed–work load.

Select a model based on the workpiece mass and speed which are within the range of the actuator body specifications while referencing the speed–work load graph (guide) on page 94.

Selection example) The **LEJS63□B-300** can be temporarily selected as a possible candidate based on the graph shown on the right side.

∗ Refer to the selection method of motor manufacturers for regeneration resistance.

Step 2 Check the cycle time.

Refer to method 1 for a rough estimate, and method 2 for a more precise value.

Method 1: Check the cycle time graph. (pages 95, 96)

The graph is based on the maximum speed of each size.

Method 2: Calculation

Cycle time:

T can be found from the following equation.

$$T = T1 + T2 + T3 + T4 \text{ [s]}$$

- T1 and T3 can be found by the following equation.

$$T1 = V/a1 \text{ [s]} \qquad T3 = V/a2 \text{ [s]}$$

The acceleration and deceleration values have upper limits depending on the workpiece mass and the duty ratio. Confirm that they do not exceed the upper limit, by referring to the "Work load–Acceleration/Deceleration Graph (Guide)" on pages 97 to 100.
For the ball screw type, there is an upper limit of the speed depending on the stroke. Confirm that it does not exceed the upper limit, by referring to the specifications on page 106.

- T2 can be found from the following equation.

$$T2 = \frac{L - 0.5 \cdot V \cdot (T1 + T3)}{V} \text{ [s]}$$

- T4 varies depending on the motor type and load. The value below is recommended.

$$T4 = 0.05 \text{ [s]}$$

Calculation example)
T1 to T4 can be calculated as follows.

$T1 = V/a1 = 300/3000 = 0.1$ [s],

$T3 = V/a2 = 300/3000 = 0.1$ [s]

$$T2 = \frac{L - 0.5 \cdot V \cdot (T1 + T3)}{V} = \frac{300 - 0.5 \cdot 300 \cdot (0.1 + 0.1)}{300} = 0.90 \text{ [s]}$$

$T4 = 0.05$ [s]

The cycle time can be found as follows.

$T = T1 + T2 + T3 + T4$
$= 0.1 + 0.90 + 0.1 + 0.05$
$= \mathbf{1.15}$ **[s]**

∗ The conditions for the settling time vary depending on the motor or driver to be used.

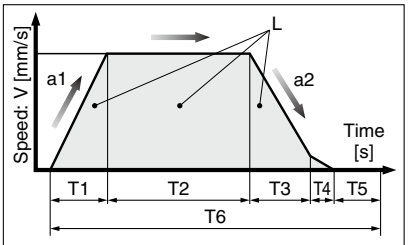

L : Stroke [mm]
V : Speed [mm/s]
a1: Acceleration [mm/s²]
a2: Deceleration [mm/s²]

T1: Acceleration time [s]
Time until reaching the set speed
T2: Constant speed time [s]
Time while the actuator is operating at a constant speed
T3: Deceleration time [s]
Time from the beginning of the constant speed operation to stop
T4: Settling time [s]
Time until positioning is completed
T5: Resting time [s]
Time the product is not running
T6: Total time [s]
Total time from T1 to T5

Duty ratio: Ratio of T to T6
T ÷ T6 x 100

Step 3 Check the allowable moment.

<Static allowable moment> (page 94)
<Dynamic allowable moment> (page 101)

Confirm the moment that applies to the actuator is within the allowable range for both static and dynamic conditions.

Selection example)
Select the **LEJS63□B-300** from the graph on the right side.
Confirm that the external force is within the allowable external force (20 [N]).
(The external force is the resistance due to cable duct, flexible trunking or air tubing.)

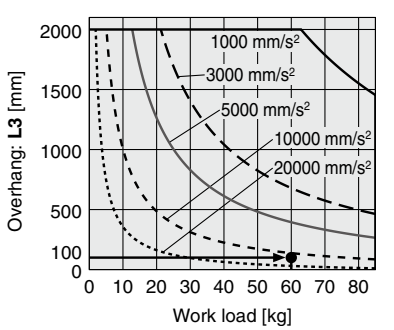

<Dynamic Allowable Moment> (LEJS63)

Speed–Work Load Graph (Guide)

∗ The values shown below are allowable values of the actuator body. Do not use the actuator so that it exceeds these specification ranges.
∗ The allowable speed is restricted depending on the stroke. Select it by referring to the "Allowable Stroke Speed."

LEJS40/Ball Screw Drive

Horizontal

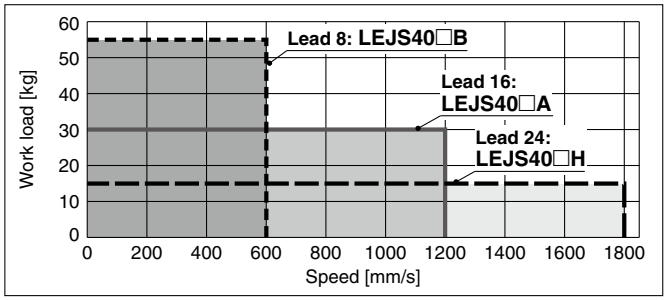

Vertical

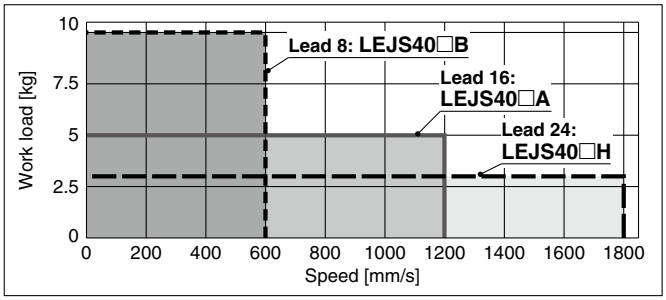

LEJS63/Ball Screw Drive

Horizontal

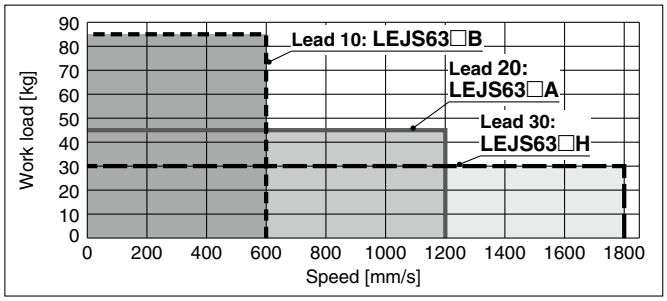

Vertical

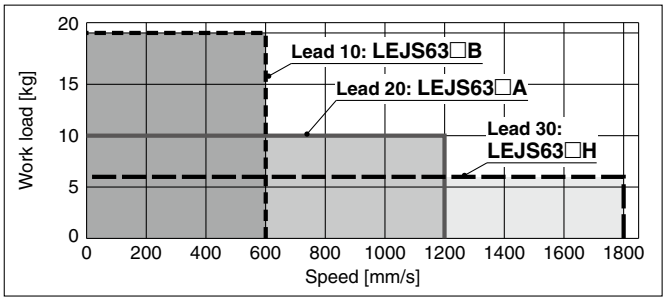

LEJS100/Ball Screw Drive

Horizontal

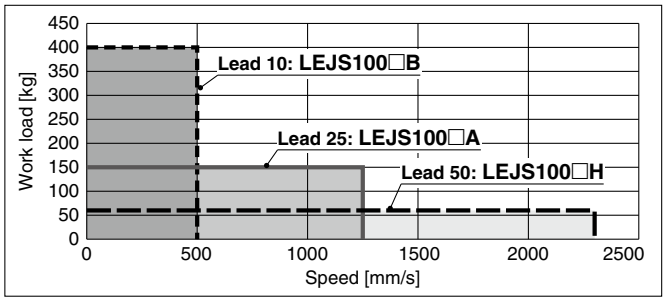

Vertical

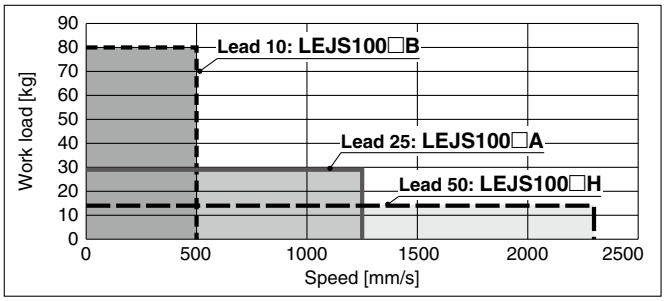

Allowable Stroke Speed

[mm/s]

Model	Motor	Lead		Stroke [mm]													
		Symbol	[mm]	Up to 200	Up to 300	Up to 400	Up to 500	Up to 600	Up to 700	Up to 800	Up to 900	Up to 1000	Up to 1100	Up to 1200	Up to 1300	Up to 1400	Up to 1500
LEJS40	100 W equivalent	H	24	1800				1580	1170	910	720	580	480	410	—	—	—
		A	16	1200				1050	780	600	480	390	320	270	—	—	—
		B	8	600				520	390	300	240	190	160	130	—	—	—
		(Motor rotation speed)		(4500 rpm)				(3938 rpm)	(2925 rpm)	(2250 rpm)	(1800 rpm)	(1463 rpm)	(1200 rpm)	(1013 rpm)	—	—	—
LEJS63	200 W equivalent	H	30	—	1800					1390	1110	900	750	630	540	470	410
		A	20	—	1200					930	740	600	500	420	360	310	270
		B	10	—	600					460	370	300	250	210	180	150	130
		(Motor rotation speed)		—	(3600 rpm)					(2790 rpm)	(2220 rpm)	(1800 rpm)	(1500 rpm)	(1260 rpm)	(1080 rpm)	(930 rpm)	(810 rpm)
LEJS100	750 W equivalent	H	50	2300							1900	1600	1400	1200	1000	900	900
		A	25	1250							950	800	700	600	500	450	450
		B	10	500							380	320	280	240	200	180	180
		(Motor rotation speed)		(2760 rpm)							(2280 rpm)	(1920 rpm)	(1680 rpm)	(1440 rpm)	(1200 rpm)	(1080 rpm)	(1050 rpm)

Static Allowable Moment∗1

[N·m]

Model	Size	Pitching	Yawing	Rolling
LEJS	**40**	83.9	88.2	88.2
	63	121.5	135.1	135.1
	100	805	771	939

∗1 The static allowable moment is the amount of static moment which can be applied to the actuator when it is stopped.
If the product is exposed to impact or repeated load, be sure to take adequate safety measures when using the product.

Cycle Time Graph (Guide)

LEJS40/Ball Screw Drive

LEJS40□H

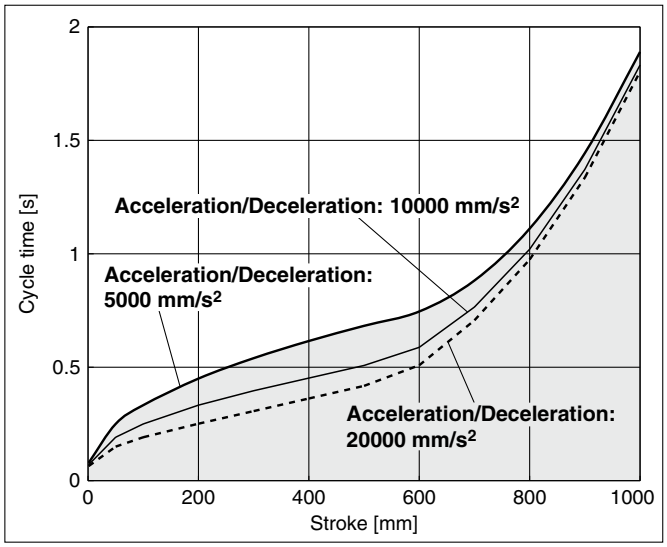

LEJS40□A

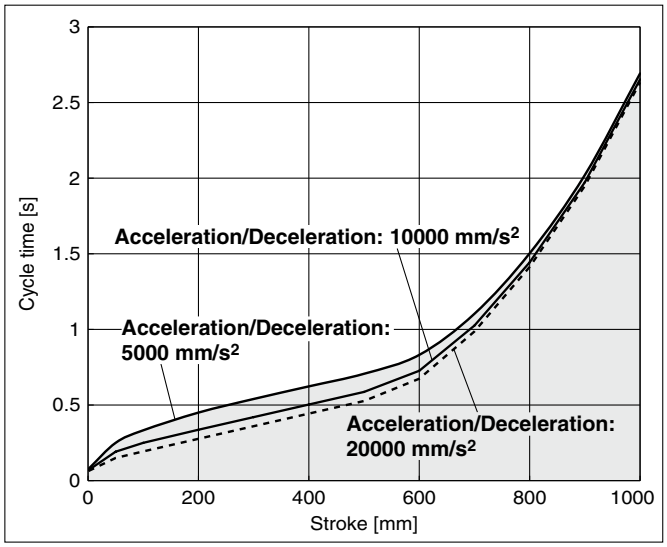

LEJS40□B

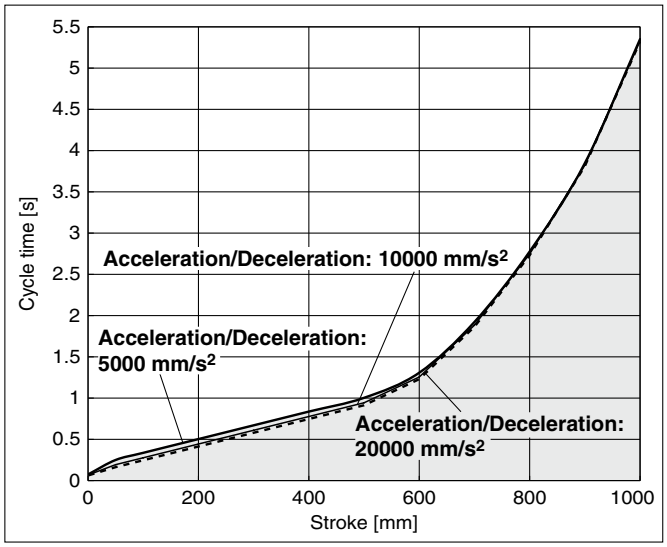

LEJS63/Ball Screw Drive

LEJS63□H

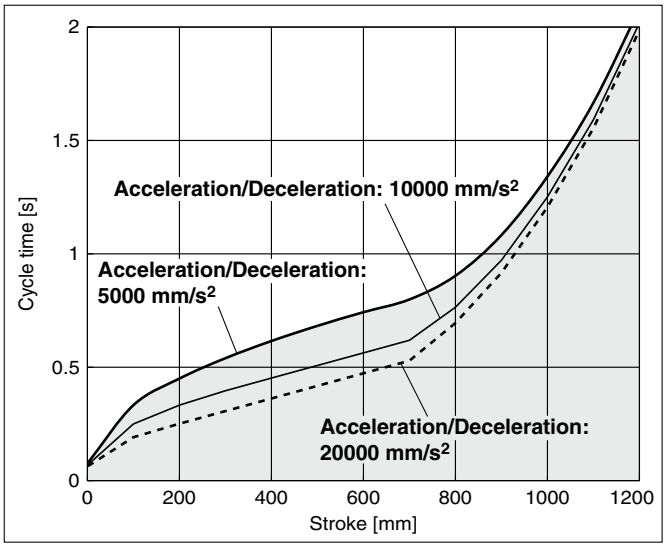

LEJS63□A

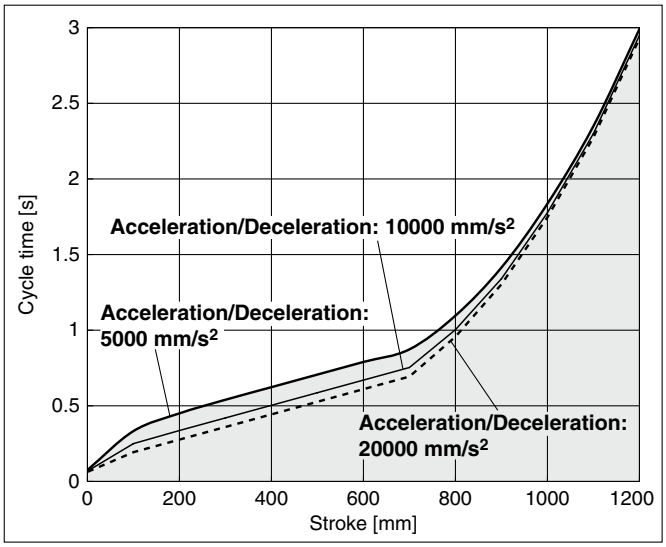

LEJS63□B

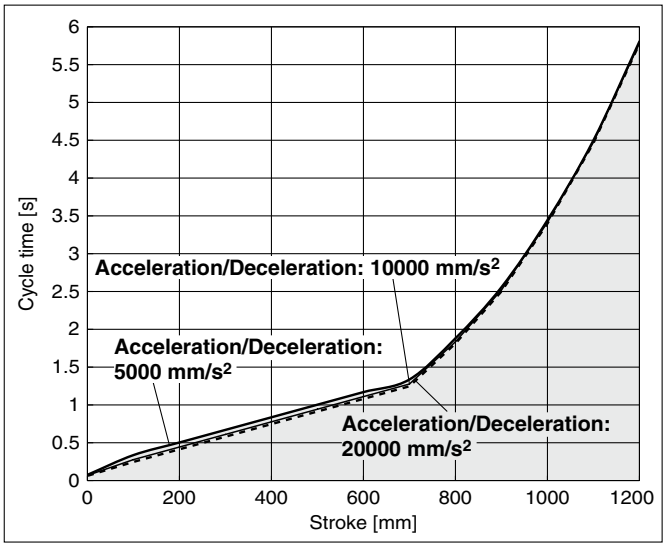

∗ These graphs show the cycle time for each acceleration/deceleration.
∗ These graphs show the cycle time for each stroke at the maximum speed.

Cycle Time Graph (Guide)

LEJS100/Ball Screw Drive

LEJS100□H

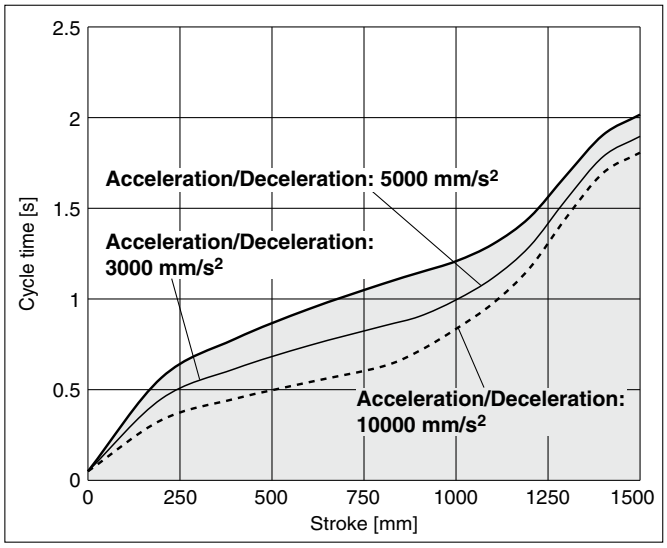

LEJS100□A

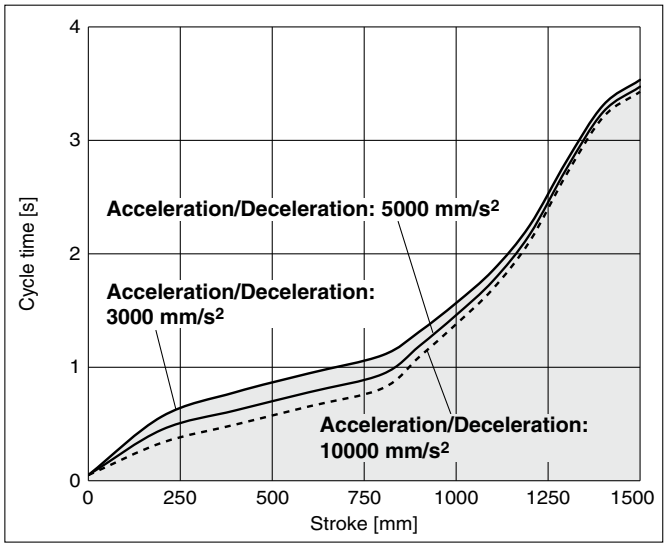

LEJS100□B

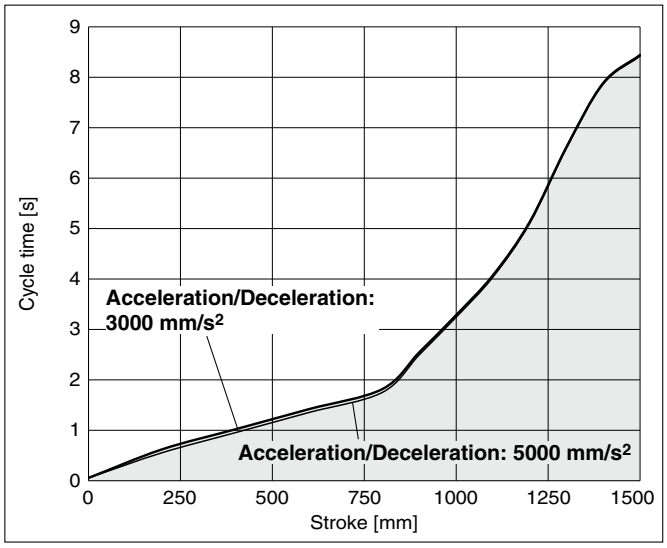

∗ These graphs show the cycle time for each acceleration/deceleration.
∗ These graphs show the cycle time for each stroke at the maximum speed.

Work Load–Acceleration/Deceleration Graph (Guide)

LEJS40/Ball Screw Drive: Horizontal

LEJS40□H

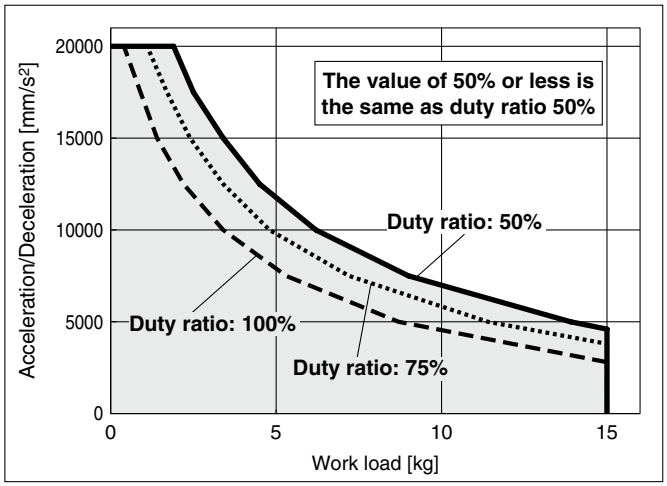

LEJS40□A

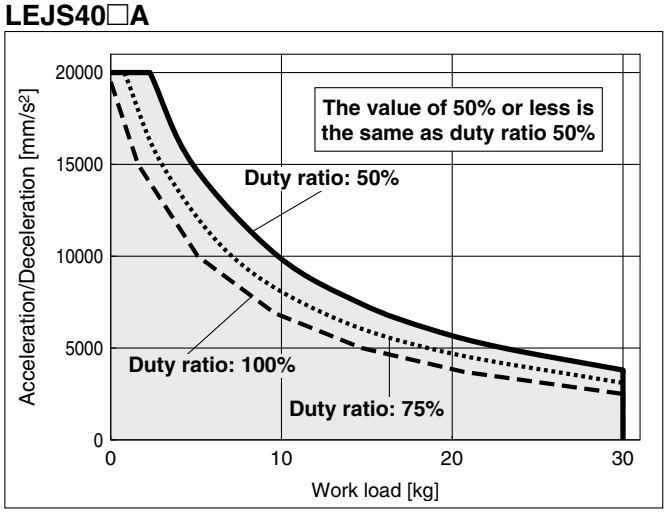

LEJS40□B

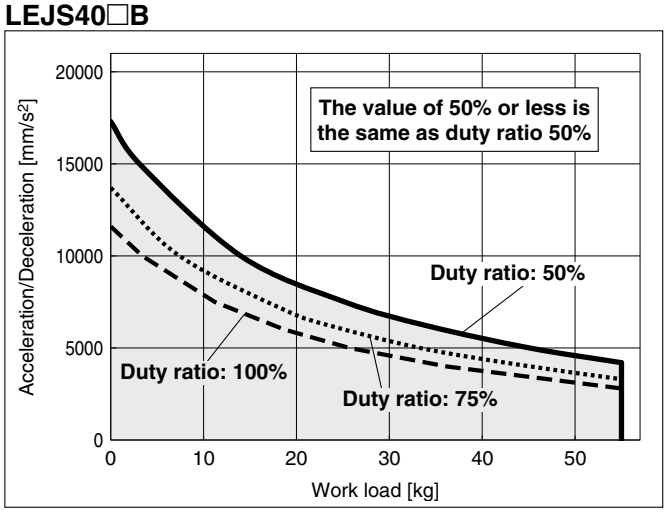

LEJS63/Ball Screw Drive: Horizontal

LEJS63□H

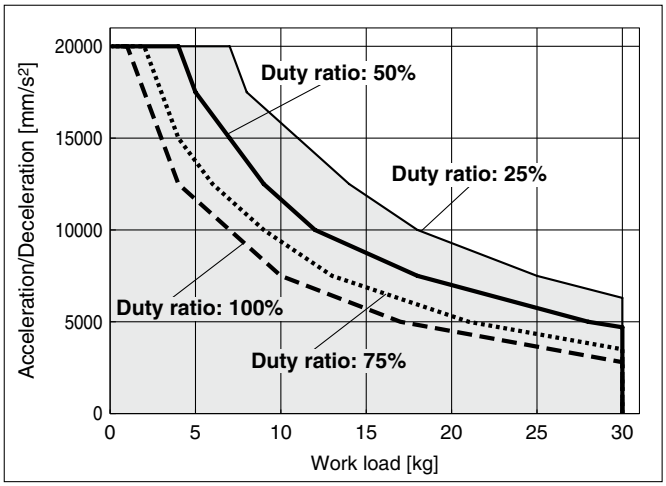

LEJS63□A

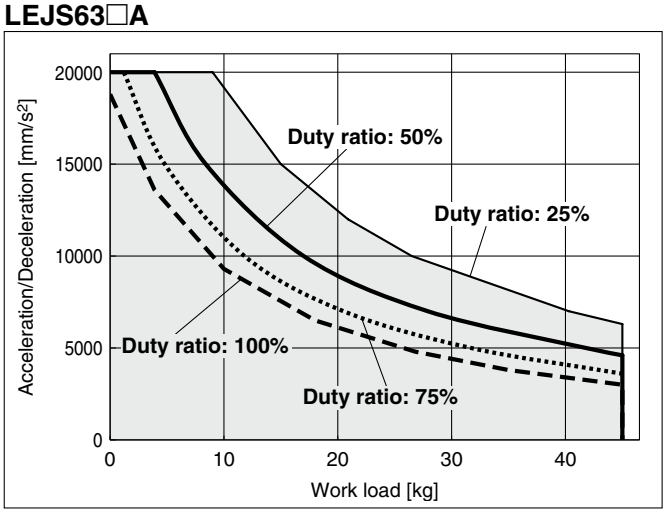

LEJS63□B

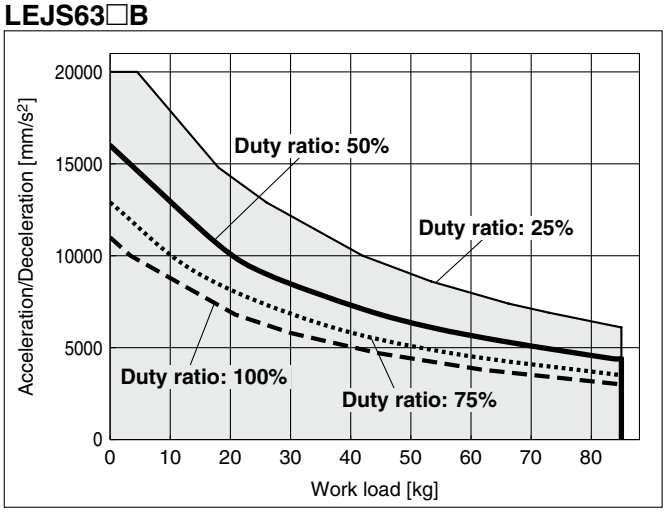

These graphs are examples of when the standard motor is mounted.
Determine the duty ratio after taking into account the load factor of the motor or driver to be used.

Work Load–Acceleration/Deceleration Graph (Guide)

LEJS100/Ball Screw Drive: Horizontal

LEJS100□H

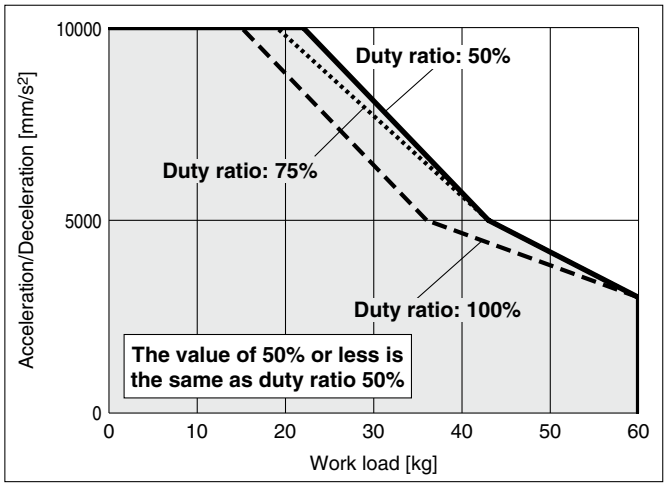

LEJS100□A

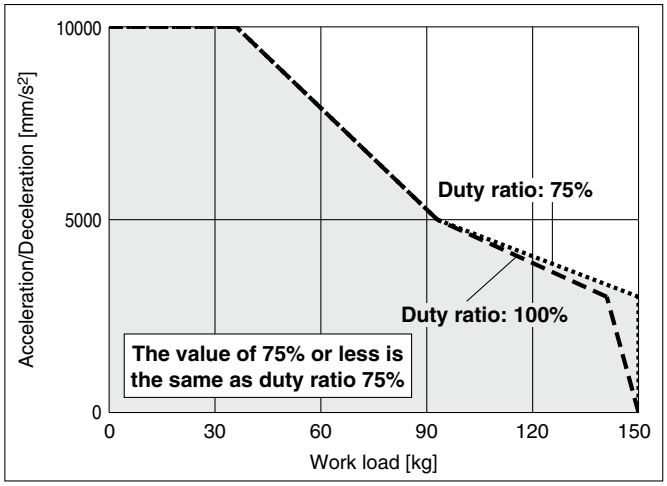

LEJS100□B

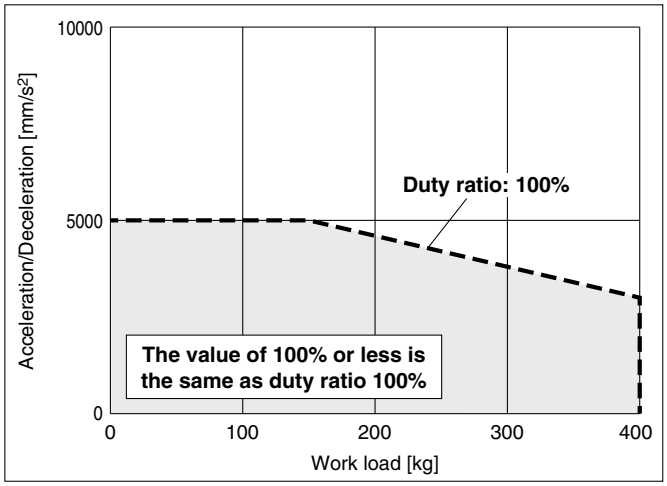

These graphs are examples of when the standard motor is mounted.
Determine the duty ratio after taking into account the load factor of the motor or driver to be used.

Work Load–Acceleration/Deceleration Graph (Guide)

LEJS40/Ball Screw Drive: Vertical

LEJS40□H

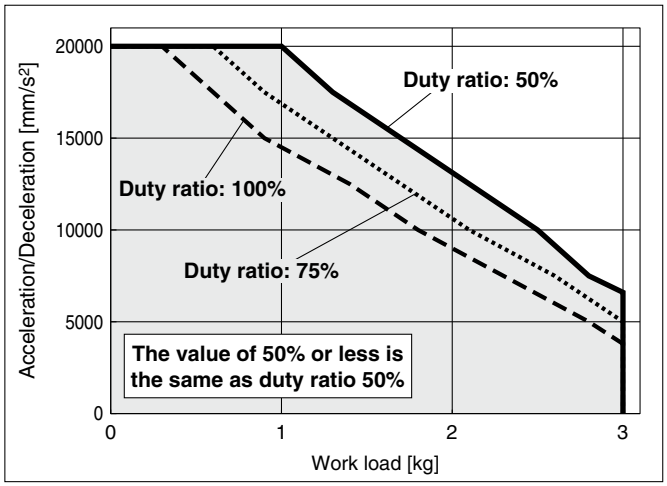

LEJS40□A

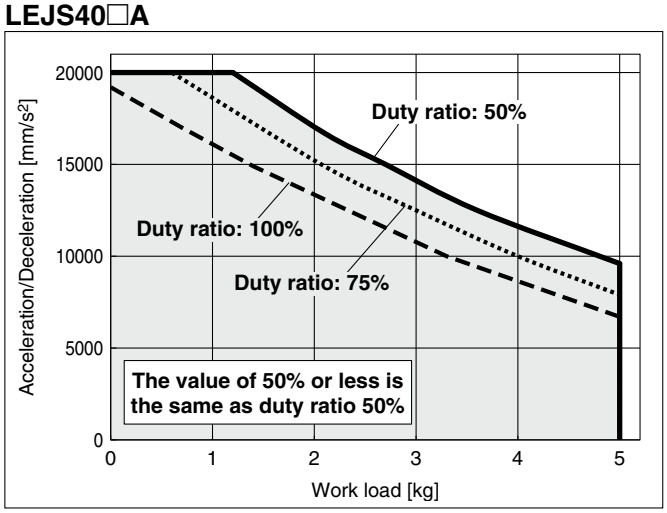

LEJS40□B

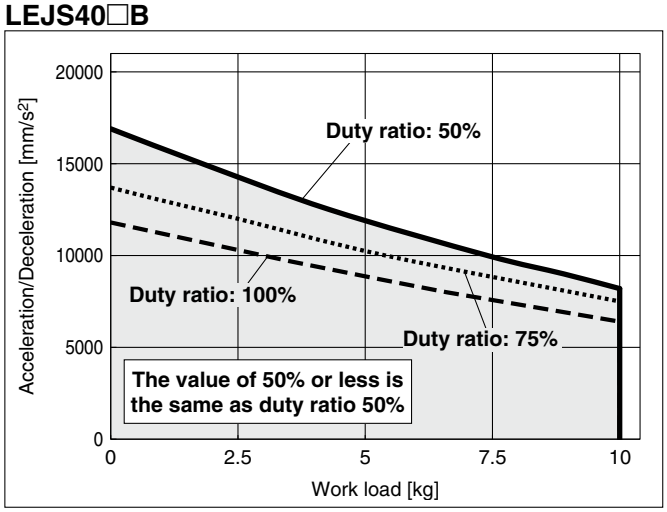

LEJS63/Ball Screw Drive: Vertical

LEJS63□H

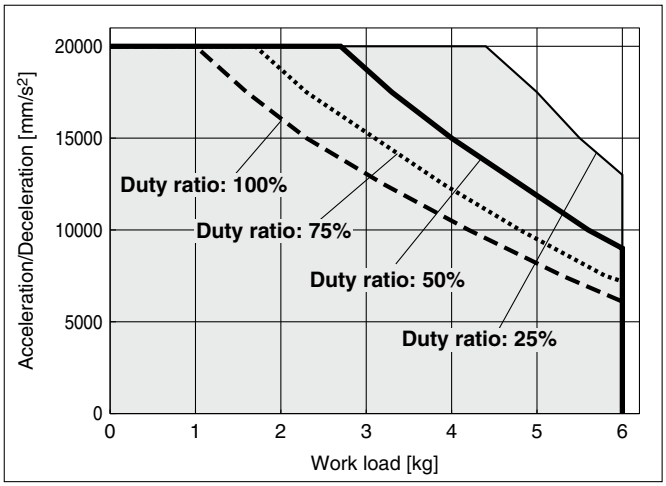

LEJS63□A

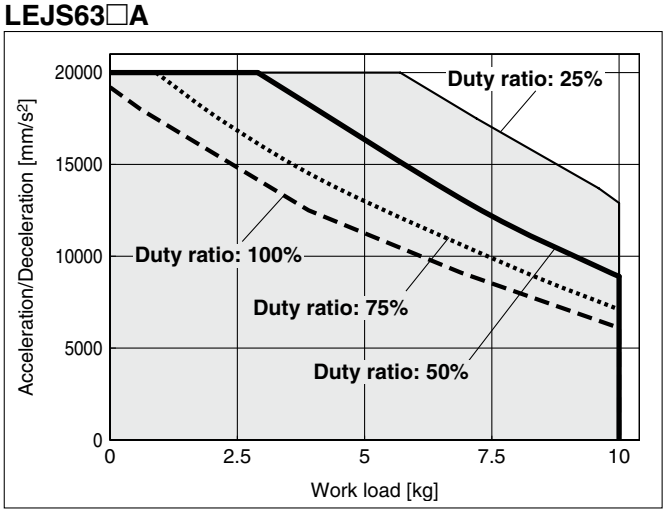

LEJS63□B

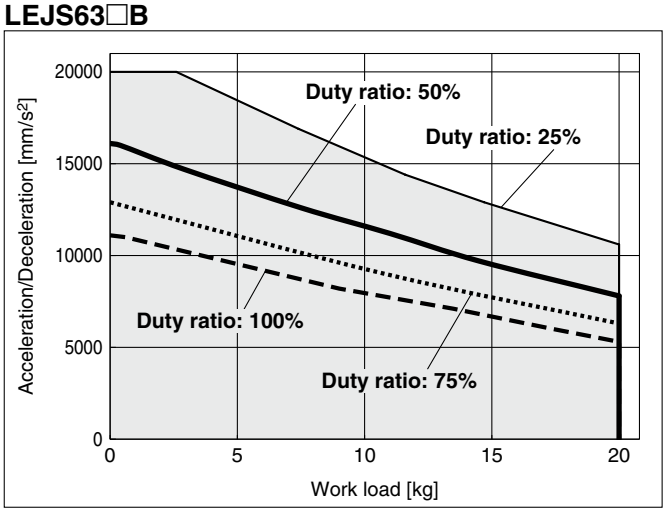

These graphs are examples of when the standard motor is mounted.
Determine the duty ratio after taking into account the load factor of the motor or driver to be used.

Work Load–Acceleration/Deceleration Graph (Guide)

LEJS100/Ball Screw Drive: Vertical

LEJS100□H

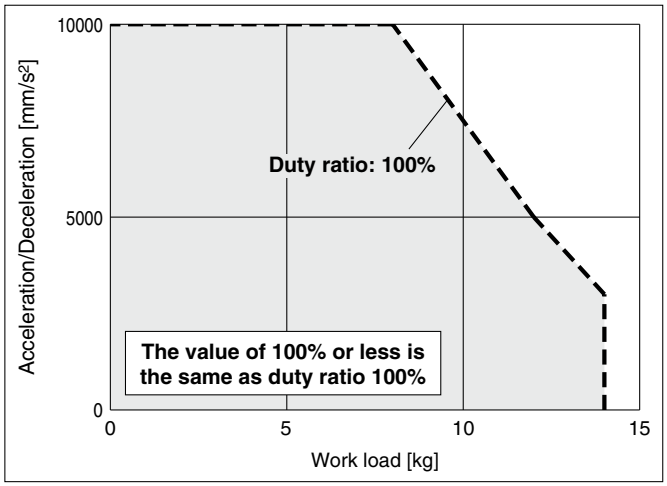

LEJS100□A

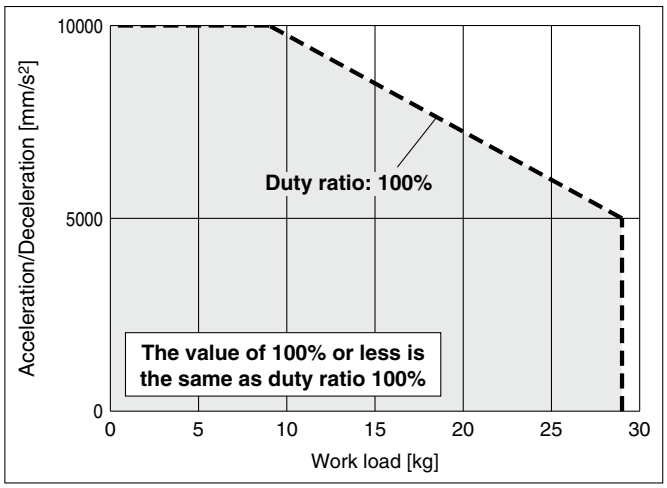

LEJS100□B

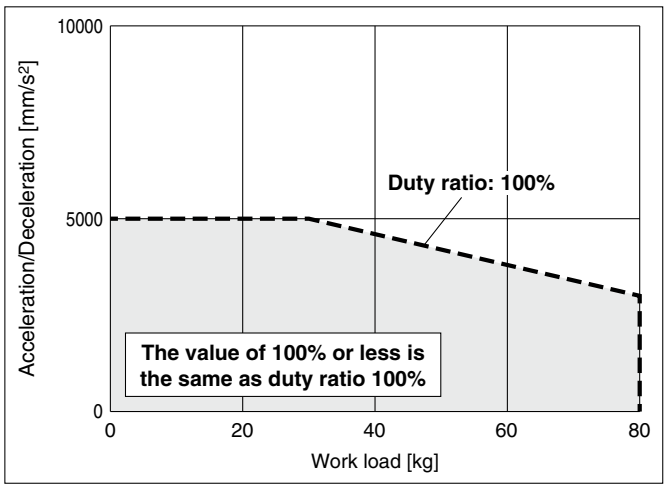

These graphs are examples of when the standard motor is mounted.
Determine the duty ratio after taking into account the load factor of the motor or driver to be used.

Dynamic Allowable Moment

∗ These graphs show the amount of allowable overhang (guide unit) when the center of gravity of the work-piece overhangs in one direction. When selecting the overhang, refer to the "Calculation of Guide Load Factor" or the Electric Actuator Model Selection Software for confirmation: https://www.smcworld.com

Acceleration/Deceleration —— 1000 mm/s² — — — 3000 mm/s² —— 5000 mm/s² - - - - 10000 mm/s² ····· 20000 mm/s²

Orientation	Load overhanging direction **m** : Work load [kg] **Me**: Allowable moment [N·m] **L** : Overhang to the work load center of gravity [mm]		Model		
			LEJS40	**LEJS63**	**LEJS100**
Horizontal		X	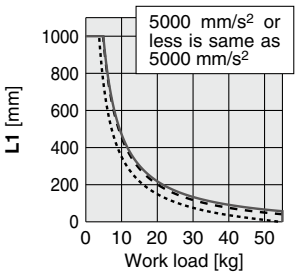	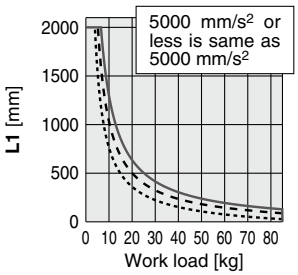	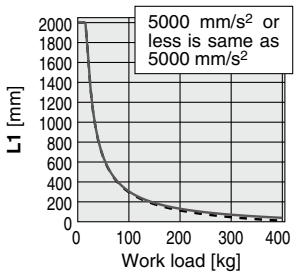
	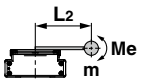	Y	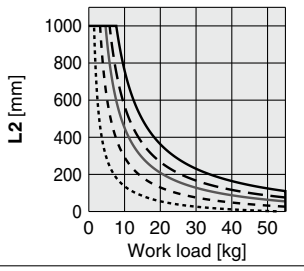	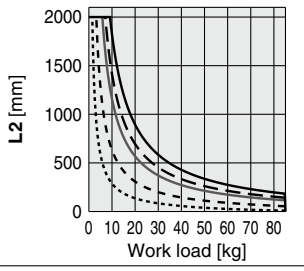	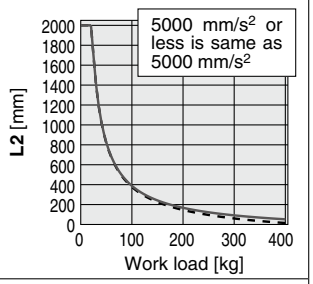
	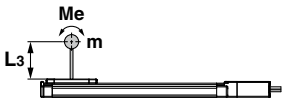	Z	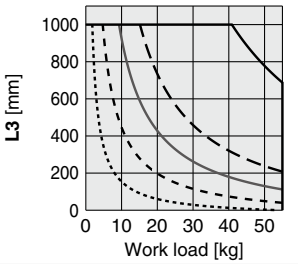	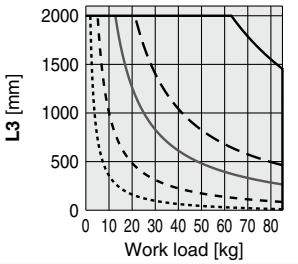	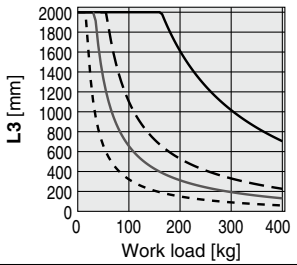
Bottom		X	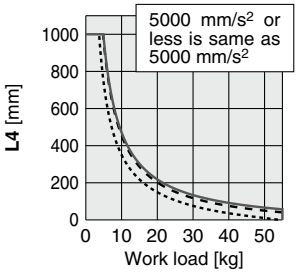	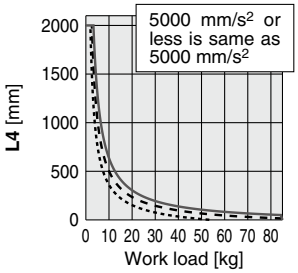	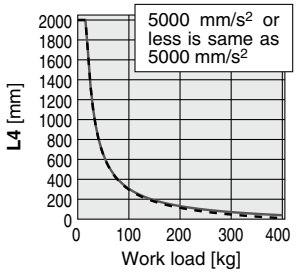
	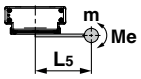	Y	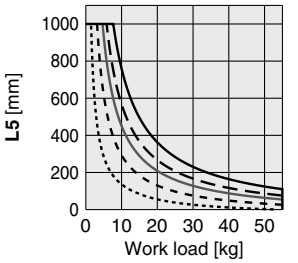	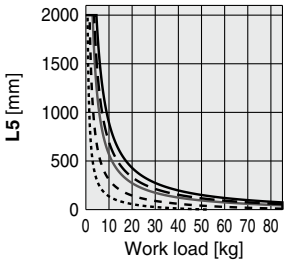	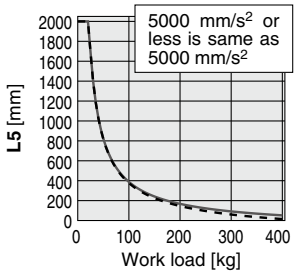
	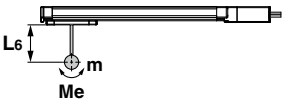	Z	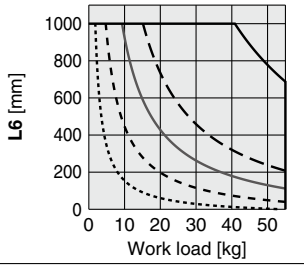	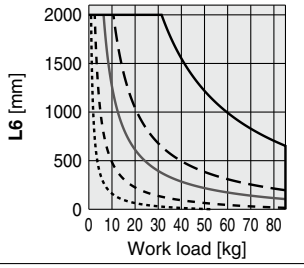	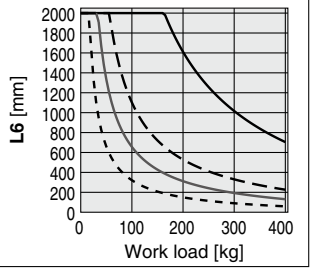

Dynamic Allowable Moment

∗ These graphs show the amount of allowable overhang (guide unit) when the center of gravity of the work-piece overhangs in one direction. When selecting the overhang, refer to the "Calculation of Guide Load Factor" or the Electric Actuator Model Selection Software for confirmation: https://www.smcworld.com

Acceleration/Deceleration —— 1000 mm/s² – – – 3000 mm/s² —— 5000 mm/s² - - - - 10000 mm/s² ····· 20000 mm/s²

Orientation	Load overhanging direction **m** : Work load [kg] **Me**: Allowable moment [N·m] **L** : Overhang to the work load center of gravity [mm]		Model		
			LEJS40	**LEJS63**	**LEJS100**
Wall	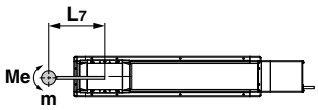	X	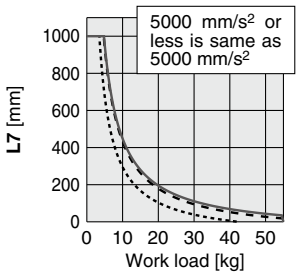	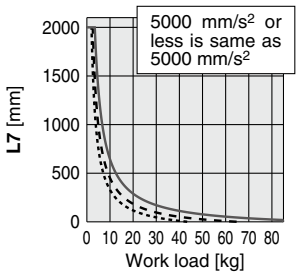	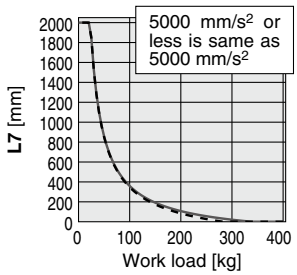
	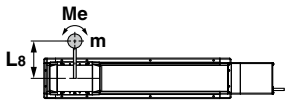	Y	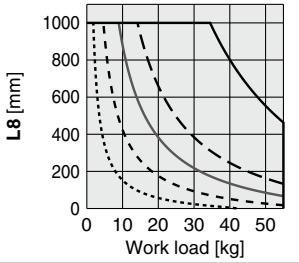	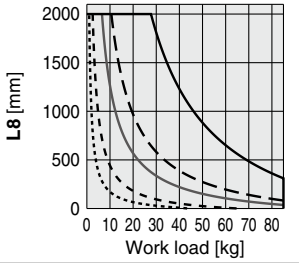	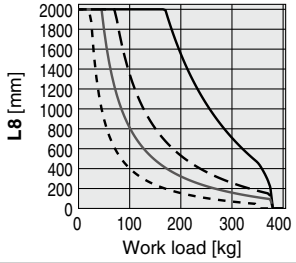
	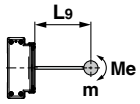	Z	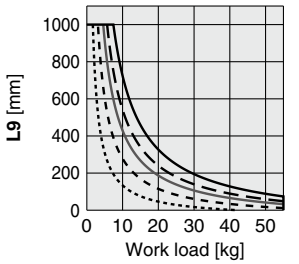	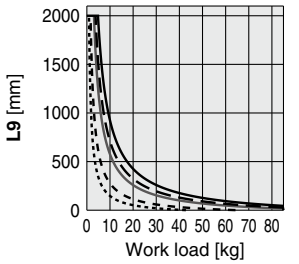	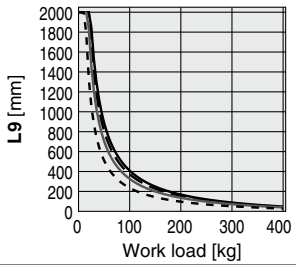
Vertical	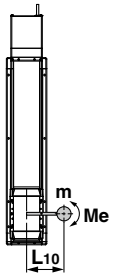	Y	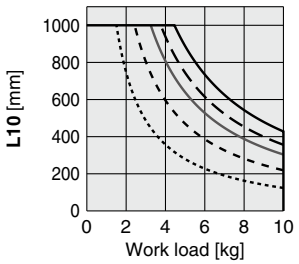	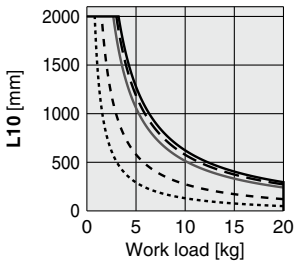	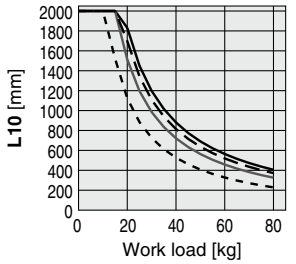
	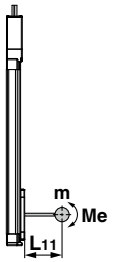	Z	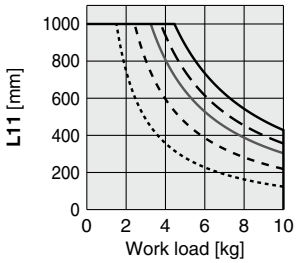	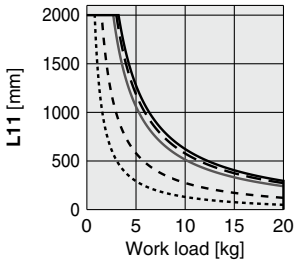	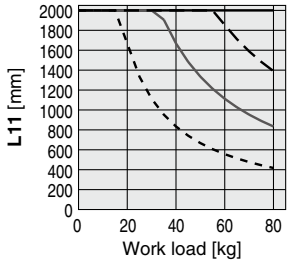

Calculation of Guide Load Factor

1. Decide operating conditions.
   Model: LEJS
   Size: 40/63
   Mounting orientation: Horizontal/Bottom/Wall/Vertical
   Acceleration [mm/s²]: **a**
   Work load [kg]: **m**
   Work load center position [mm]: **Xc/Yc/Zc**
2. Select the target graph while referencing the model, size, and mounting orientation.
3. Based on the acceleration and work load, find the overhang [mm]: **Lx/Ly/Lz** from the graph.
4. Calculate the load factor for each direction.
   $\alpha x = Xc/Lx$, $\alpha y = Yc/Ly$, $\alpha z = Zc/Lz$
5. Confirm the total of αx, αy, and αz is 1 or less.
   $\alpha x + \alpha y + \alpha z \leq 1$
   When 1 is exceeded, consider a reduction of acceleration and work load, or a change of the work load center position and series.

Mounting Orientation

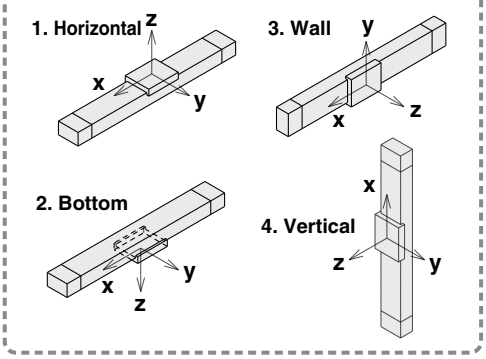

Example

1. Operating conditions
   Model: LEJS
   Size: 40
   Mounting orientation: Horizontal
   Acceleration [mm/s²]: 5000
   Work load [kg]: 20
   Work load center position [mm]: **Xc = 0**, **Yc = 50**, **Zc = 200**
2. Select the graph on page 101, top and left side first row.
3. **Lx = 220 mm**, **Ly = 210 mm**, **Lz = 430 mm**
4. The load factor for each direction can be found as follows.
   $\alpha x = 0/220 = 0$
   $\alpha y = 50/210 = 0.24$
   $\alpha z = 200/430 = 0.47$
5. $\alpha x + \alpha y + \alpha z = 0.71 \leq 1$

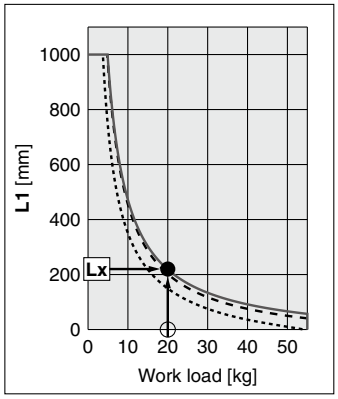

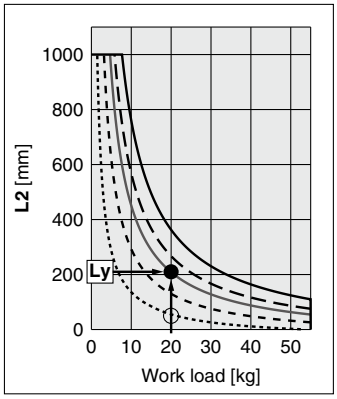

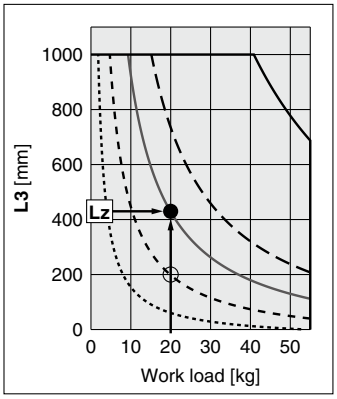

Table Accuracy (Reference Value)

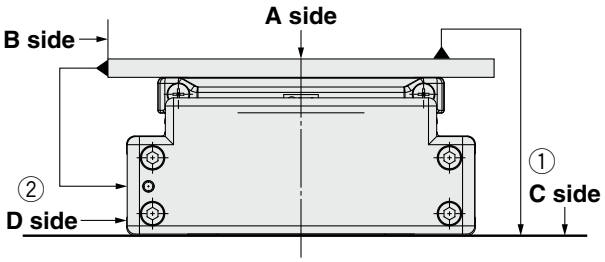

Model	Traveling parallelism [mm] (Every 300 mm)	
	① C side traveling parallelism to A side	② D side traveling parallelism to B side
LEJS40	0.05	0.03
LEJS63	0.05	0.03
LEJS100	0.05	0.04

∗ Traveling parallelism does not include the mounting surface accuracy.

Table Displacement (Reference Value)

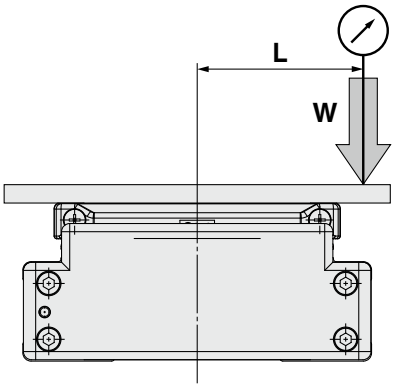

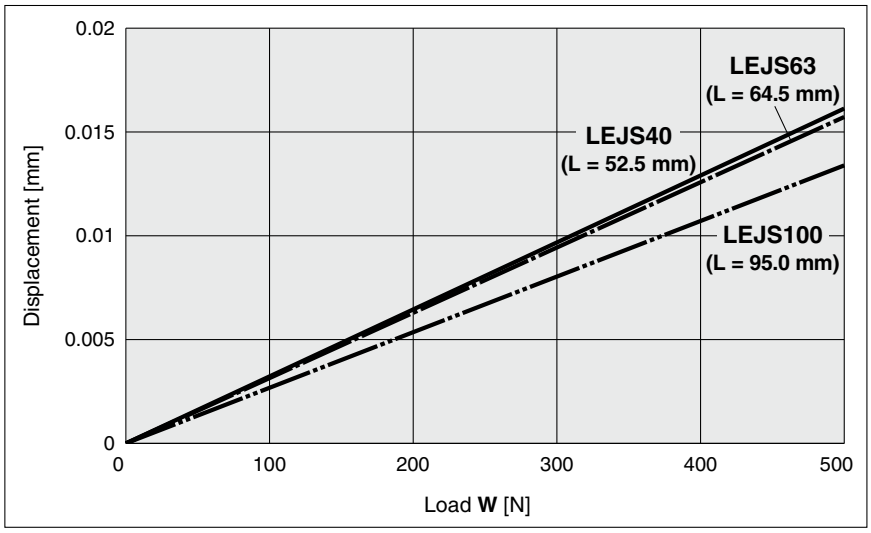

∗ This displacement is measured when a 15 mm aluminum plate is mounted and fixed on the table. (Table clearance is included.)

Motorless Type

Electric Actuator/High Rigidity Slider Type
Ball Screw Drive

LEJS Series LEJS40, 63

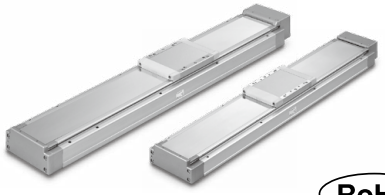

LEJS-M Series ▶ p. 109

RoHS

How to Order

LEJS H 40 NZ A – 500

❶ ❷ ❸ ❹ ❺

❶ Accuracy

Nil	Basic type
H	High-precision type

❷ Size

40
63

❸ Mounting type

NZ
NY
NX
NW∗1
NV∗1
NU∗1
NT∗1

∗1 Size 63 only

❹ Lead [mm]

Symbol	LEJS40	LEJS63
H	24	30
A	16	20
B	8	10

❺ Stroke [mm]

200
to
1500

∗ For details, refer to the table below.

Applicable Stroke Table

●: Standard

Model \ Stroke [mm]	200	300	400	500	600	700	800	900	1000	1200	1500
LEJS40	●	●	●	●	●	●	●	●	●	●	—
LEJS63	—	●	●	●	●	●	●	●	●	●	●

∗ Please contact SMC for non-standard strokes as they are produced as special orders.

For auto switches, refer to pages 116 to 120.

Compatible Motors and Mounting Types∗2

Applicable motor model		Size/Mounting type									
Manufacturer	Series	40			63						
		NZ	NY	NX	NZ	NY	NX	NW	NV	NU	NT
Mitsubishi Electric Corporation	MELSERVO JN/J4/J5	●	—	—	●	—	—	—	—	—	—
YASKAWA Electric Corporation	Σ-V/7/X	●∗1	—	—	●	—	—	—	—	—	—
SANYO DENKI CO., LTD.	SANMOTION R	●	—	—	●	—	—	—	—	—	—
OMRON Corporation	OMNUC G5/1S	●	—	—	—	●	—	—	—	—	—
Panasonic Corporation	MINAS A5/A6	● (MHMF only)	●	—	—	●	—	—	—	—	—
FANUC CORPORATION	βis (-B)	●	—	—	● (β1 only)	—	—	●	—	—	—
NIDEC SANKYO CORPORATION	S-FLAG	●	—	—	●	—	—	—	—	—	—
KEYENCE CORPORATION	SV/SV2	●∗1	—	—	●	—	—	—	—	—	—
FUJI ELECTRIC CO., LTD.	ALPHA7	●	—	—	●	—	—	—	—	—	—
Rockwell Automation, Inc. (Allen-Bradley)	Kinetix MP/VP/TL	● (TL only)	—	—	—	—	● (MP/VP only)	—	—	—	● (TL only)
Beckhoff Automation GmbH	AM 30/31/80/81	●	—	—	—	—	● (80/81 only)	—	● (30 only)	● (31 only)	—
Siemens AG	SIMOTICS S-1FK7	—	—	●	—	—	●	—	—	—	—
Delta Electronics, Inc.	ASDA-A2	●	—	—	●	—	—	—	—	—	—
ANCA Motion	AMD2000	●	—	—	●	—	—	—	—	—	—

∗1 For some motors, the connector may protrude from the motor body. Be sure to check for interference with the mounting surface before selecting a motor.
∗2 The compatible motors and mounting types are typical examples. Select the mounting type after referring to the "Motor Mounting, Applicable Motor Dimensions" tables on the following "Dimensions" pages.

Specifications

- Values in this specifications table are the allowable values of the actuator body with the standard motor mounted.
- Do not use the actuator so that it exceeds these values.

Model			LEJS40			LEJS63		
Actuator specifications	Stroke [mm]*1		200, 300, 400, 500, 600, 700, 800 900, 1000, 1200			300, 400, 500, 600, 700, 800, 900 1000, 1200, 1500		
	Work load [kg]*2	Horizontal	15	30	55	30	45	85
		Vertical	3	5	10	6	10	20
	Speed*3 [mm/s] Stroke range	Up to 500	1800	1200	600	1800	1200	600
		501 to 600	1580	1050	520			
		601 to 700	1170	780	390			
		701 to 800	910	600	300	1390	930	460
		801 to 900	720	480	240	1110	740	370
		901 to 1000	580	390	190	900	600	300
		1001 to 1100	480	320	160	750	500	250
		1101 to 1200	410	270	130	630	420	210
		1201 to 1300	—	—	—	540	360	180
		1301 to 1400	—	—	—	470	310	150
		1401 to 1500	—	—	—	410	270	130
	Max. acceleration/deceleration [mm/s²]		20000					
	Positioning repeatability [mm]	Basic type	±0.02					
		High-precision type	±0.01					
	Lost motion [mm]*4	Basic type	0.1 or less					
		High-precision type	0.05 or less					
	Ball screw specifications	Thread size [mm]	ø12			ø15		
		Lead [mm]	24	16	8	30	20	10
		Shaft length [mm]	Stroke + 118.5			Stroke + 126.5		
	Impact/Vibration resistance [m/s²]*5		50/20					
	Actuation type		Ball screw					
	Guide type		Linear guide					
	Static allowable moment*6 [N·m]	Mep (Pitching)	83.9			121.5		
		Mey (Yawing)	88.2			135.1		
		Mer (Rolling)	88.2			135.1		
	Operating temperature range [°C]		5 to 40					
	Operating humidity range [%RH]		90 or less (No condensation)					
	Enclosure		IP30 (Excludes motor mounting part)					
Other specifications *7	Actuation unit weight [kg]		0.86			1.37		
	Other inertia [kg·cm²]		0.031			0.129		
	Friction coefficient		0.05					
	Mechanical efficiency		0.8					
Reference motor specifications *8	Motor type		AC servo motor (100 V/200 V)					
	Rated output capacity [W]		100			200		
	Rated torque [N·m]		0.32			0.64		

*1 Please contact SMC for non-standard strokes as they are produced as special orders.
*2 Check the "Speed–Work Load Graph (Guide)" on page 94.
*3 The allowable speed changes according to the stroke.
*4 A reference value for correcting errors in reciprocal operation
*5 Impact resistance: No malfunction occurred when the actuator was tested with a drop tester in both an axial direction and a perpendicular direction to the lead screw. (The test was performed with the actuator in the initial state.)
Vibration resistance: No malfunction occurred in a test ranging between 45 to 2000 Hz. The test was performed in both an axial direction and a perpendicular direction to the lead screw. (The test was performed with the actuator in the initial state.)
*6 The static allowable moment is the amount of static moment which can be applied to the actuator when it is stopped.
If the product is exposed to impact or repeated load, be sure to take adequate safety measures when using the product.
*7 Each value is only to be used as a guide to select a motor of the appropriate capacity.
*8 For other specifications, refer to the specifications of the motor that is to be installed.
* Sensor magnet position is located in the table center.
For detailed dimensions, refer to the "Auto Switch Mounting Position."
* Do not allow collisions at either end of the table traveling distance.
Additionally, when running the positioning operation, do not set within 2 mm of both ends.
* Please contact SMC for the manufacture of intermediate strokes.
(LEJS40/Manufacturable stroke range: 200 to 1200 mm, LEJS63/Manufacturable stroke range: 300 to 1500 mm)

Weight

Model	LEJS40									
Stroke [mm]	200	300	400	500	600	700	800	900	1000	1200
Product weight [kg]	5.0	5.8	6.5	7.3	8.1	8.8	9.6	10.4	11.1	12.7

Model	LEJS63									
Stroke [mm]	300	400	500	600	700	800	900	1000	1200	1500
Product weight [kg]	10.4	11.7	12.9	14.2	15.4	16.7	17.9	19.1	21.6	25.4

Refer to the "Motor Mounting" on page 113 for details about motor mounting and included parts.

Dimensions: Ball Screw Drive

LEJS40

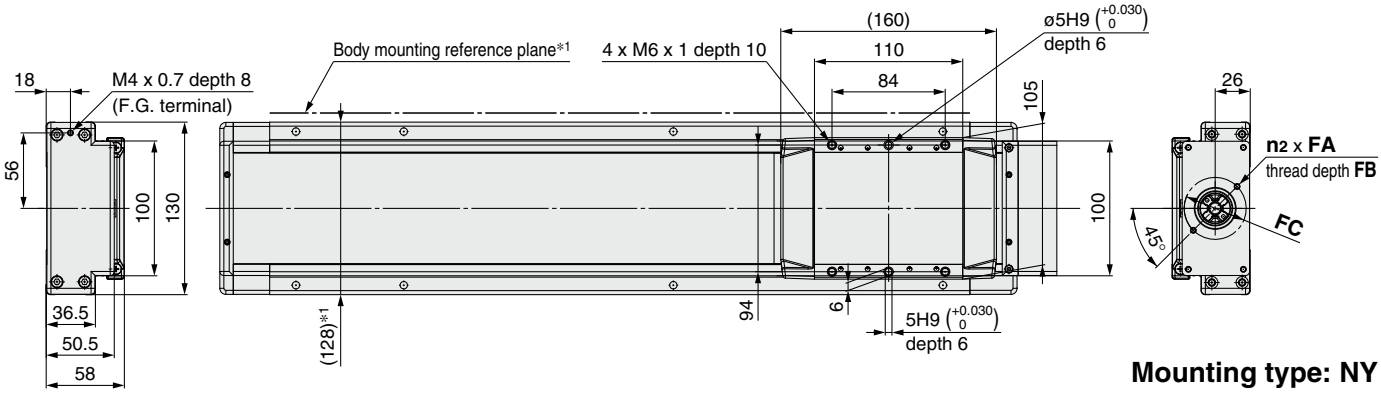

Mounting type: NY
LEJS40NY□-□

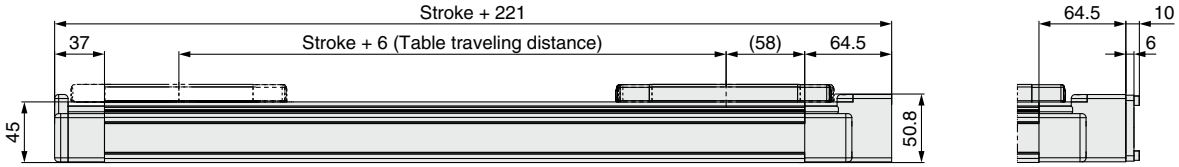

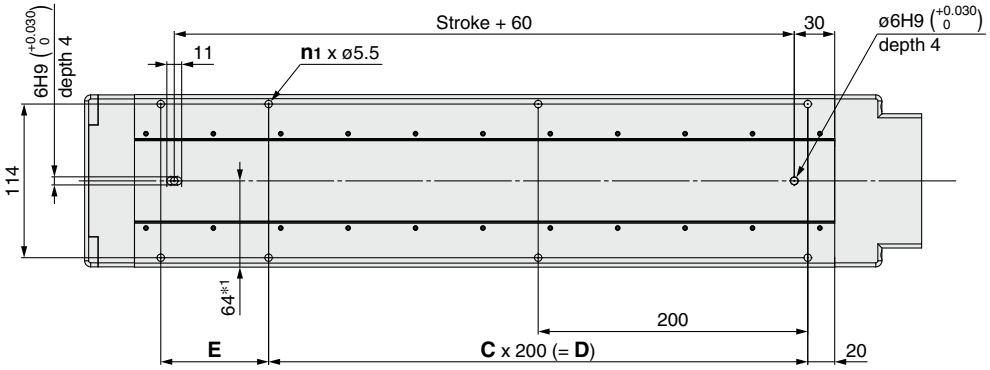

Applicable motor dimensions

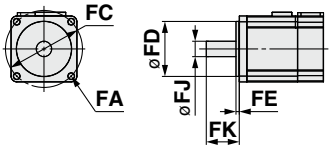

*1 When mounting the actuator using the body mounting reference plane, use a pin. Set the height of the pin to be 5 mm or more because of round chamfering. (Recommended height: 6 mm)

Dimensions [mm]

Model	n1	C	D	E
LEJS□40N□□-200	6	1	200	80
LEJS□40N□□-300	6	1	200	180
LEJS□40N□□-400	8	2	400	80
LEJS□40N□□-500	8	2	400	180
LEJS□40N□□-600	10	3	600	80
LEJS□40N□□-700	10	3	600	180
LEJS□40N□□-800	12	4	800	80
LEJS□40N□□-900	12	4	800	180
LEJS□40N□□-1000	14	5	1000	80
LEJS□40N□□-1200	16	6	1200	80

Motor Mounting, Applicable Motor Dimensions [mm]

Mounting type	n2	FA		FB	FC	FD	FE (Max.)	FJ	FK
		Mounting type	Applicable motor						
NZ	2	M4 x 0.7	ø4.5	7	ø46	30	3.5	8	25 ±1
NY	4	M3 x 0.5	ø3.4	6	ø45	30	3.5	8	25 ±1
NX	2	M4 x 0.7	ø4.5	7	ø46	30	3.5	8	18 ±1

Refer to the "Motor Mounting" on page 113 for details about motor mounting and included parts.

Dimensions: Ball Screw Drive

LEJS63

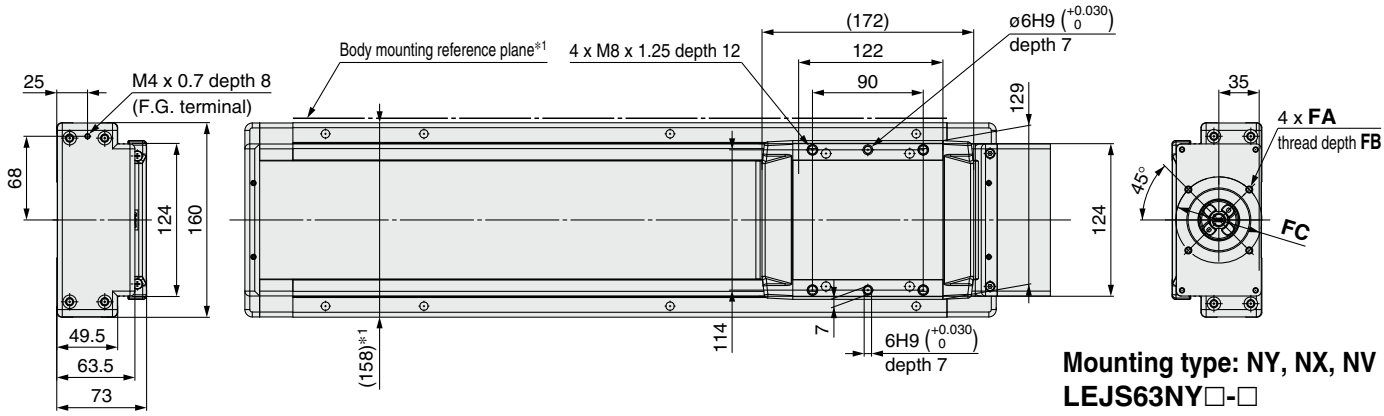

Mounting type: NY, NX, NV
LEJS63NY□-□
LEJS63NX□-□
LEJS63NV□-□

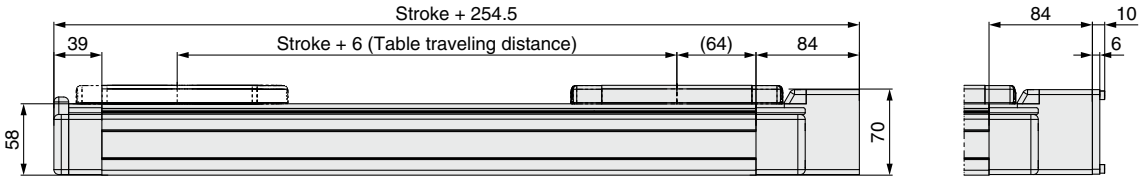

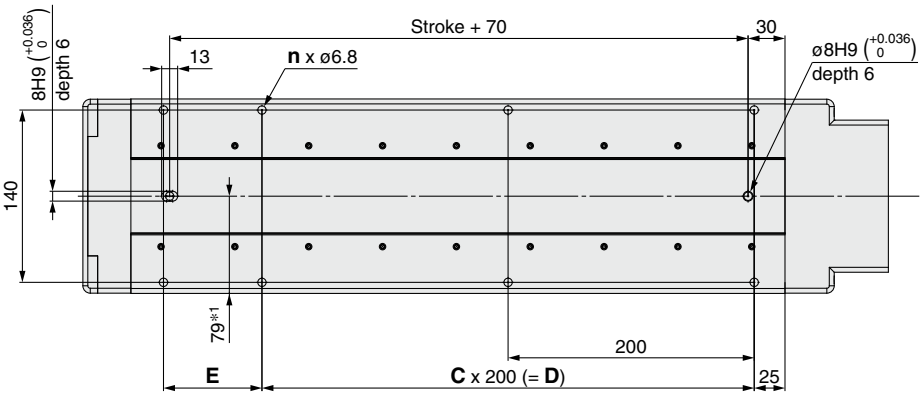

Applicable motor dimensions

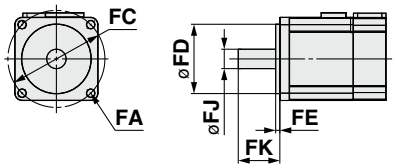

*1 When mounting the actuator using the body mounting reference plane, use a pin. Set the height of the pin to be 5 mm or more because of round chamfering. (Recommended height: 6 mm)

Dimensions [mm]

Model	n	C	D	E
LEJS□63N□□-300	6	1	200	180
LEJS□63N□□-400	8	2	400	80
LEJS□63N□□-500	8	2	400	180
LEJS□63N□□-600	10	3	600	80
LEJS□63N□□-700	10	3	600	180
LEJS□63N□□-800	12	4	800	80
LEJS□63N□□-900	12	4	800	180
LEJS□63N□□-1000	14	5	1000	80
LEJS□63N□□-1200	16	6	1200	80
LEJS□63N□□-1500	18	7	1400	180

Motor Mounting, Applicable Motor Dimensions [mm]

Mounting type	FA		FB	FC	FD	FE (Max.)	FJ	FK
	Mounting type	Applicable motor						
NZ	M5 x 0.8	ø5.8	7	ø70	50	3.3	14	30 ±1
NY	M4 x 0.7	ø4.5	6	ø70	50	3.3	11	30 ±1
NX	M5 x 0.8	ø5.8	6	ø63	40	3.5	9	20 ±1
NW	M5 x 0.8	ø5.8	7	ø70	50	3.3	9	25 ±1
NV	M4 x 0.7	ø4.5	6	ø63	40	3.5	9	20 ±1
NU	M5 x 0.8	ø5.8	7	ø70	50	3.3	11	23 ±1
NT	M5 x 0.8	ø5.8	7	ø70	50	3.3	12	30 ±1

Motorless Type

Built-in Intermediate Supports Type These specifications enable the maximum speed to be realized throughout the entire stroke.

Electric Actuator/High Rigidity Slider Type
Ball Screw Drive
LEJS63□-□M Series

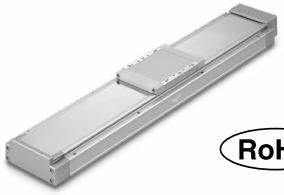

LEJS Series ▶ p. 105

RoHS

How to Order

LEJS H 63 NZ A – 790 M

❶ ❷ ❸ ❹ ❺ ❻

❶ Accuracy

Nil	Basic type
H	High-precision type

❷ Size

63

❸ Mounting type

NZ
NY
NX
NW
NV
NU
NT

❹ Lead [mm]

H	30
A	20
B	10

❺ Stroke [mm]*1

●Standard ○Produced upon receipt of order

790	890	990	1190	1490	1790
●	●	○	○	○	○

*1 Please contact SMC for non-standard strokes as they are produced as special orders.

❻ Built-in intermediate supports

M	Built-in intermediate supports

Specifications

Lead [mm]			30	20	10
Speed [mm/s]	Stroke range	790	1800	1200	600
		890			
		990			
		1190			
		1490			
		1790			

For the model selection method, refer to page 93. Specifications other than those listed are the same as the standard product. Refer to page 106 for details. For details on the construction, refer to the **Web Catalog**.

For auto switches, refer to pages 116 to 120.

Compatible Motors and Mounting Types*2

Applicable motor model		Size/Mounting type						
Manufacturer	Series	63						
		NZ	NY	NX	NW	NV	NU	NT
Mitsubishi Electric Corporation	MELSERVO JN/J4/J5	●	—	—	—	—	—	—
YASKAWA Electric Corporation	Σ-V/7/X	●*1	—	—	—	—	—	—
SANYO DENKI CO., LTD.	SANMOTION R	●	—	—	—	—	—	—
OMRON Corporation	OMNUC G5/1S	—	●	—	—	—	—	—
Panasonic Corporation	MINAS A5/A6	—	●	—	—	—	—	—
FANUC CORPORATION	βis (-B)	● (β1 only)	—	—	●	—	—	—
NIDEC SANKYO CORPORATION	S-FLAG	●	—	—	—	—	—	—
KEYENCE CORPORATION	SV/SV2	●*1	—	—	—	—	—	—
FUJI ELECTRIC CO., LTD.	ALPHA7	●	—	—	—	—	—	—
Rockwell Automation, Inc. (Allen-Bradley)	Kinetix MP/VP/TL	—	—	● (MP/VP only)	—	—	—	● (TL only)
Beckhoff Automation GmbH	AM 30/31/80/81	—	—	● (80/81 only)	—	● (30 only)	● (31 only)	—
Siemens AG	SIMOTICS S-1FK7	—	—	●	—	—	—	—
Delta Electronics, Inc.	ASDA-A2	●	—	—	—	—	—	—
ANCA Motion	AMD2000	●	—	—	—	—	—	—

*1 For some motors, the connector may protrude from the motor body. Be sure to check for interference with the mounting surface before selecting a motor.
*2 The compatible motors and mounting types are typical examples. Select the mounting type after referring to the "Motor Mounting, Applicable Motor Dimensions" tables on the following "Dimensions" pages.

Dimensions: Ball Screw Drive

The motor mounting method and the included parts are the same as the standard product. Refer to page 113 for details.

LEJS63-M

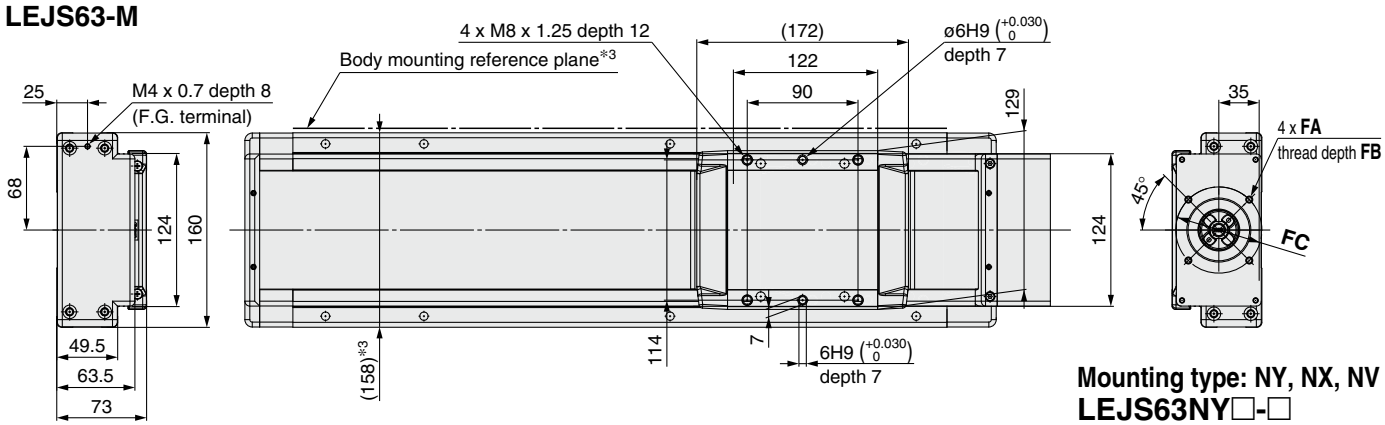

Mounting type: NY, NX, NV
LEJS63NY□-□
LEJS63NX□-□
LEJS63NV□-□

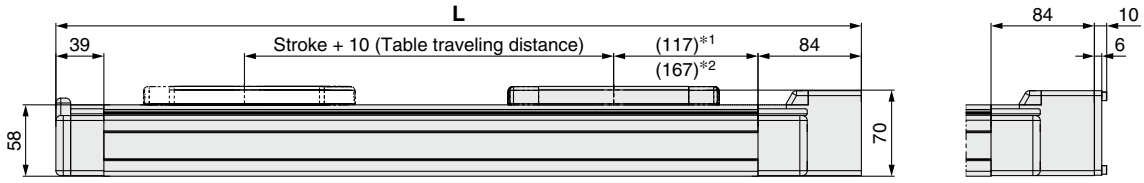

*1 Upper dimension: 790 to 1190 mm stroke
*2 Lower dimension: 1490 to 1790 mm stroke

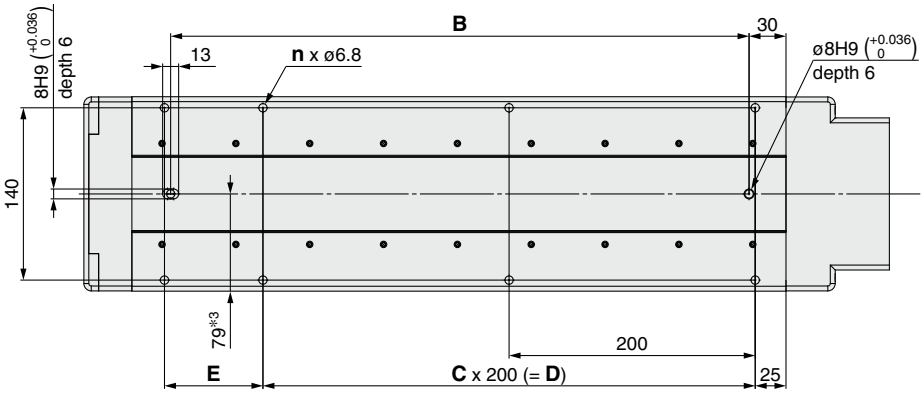

*3 When mounting the actuator using the body mounting reference plane, use a pin. Set the height of the pin to be 5 mm or more because of round chamfering. (Recommended height: 6 mm)

Applicable motor dimensions

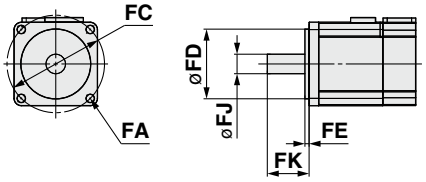

⚠Caution

1. During operation, the intermediate support mechanism emits a collision noise due to the structure.
2. Compared to the standard product, the entire length of the product will be longer for each stroke. For details, refer to the dimensions.
3. The stopper type origin position return method cannot be used as the return to origin method (due to the bumper).

Dimensions and Weight [mm]

Model	L	B	n	C	D	E	Product weight [kg]
LEJS□63N□□-790M	1154.5	970	12	4	800	180	18.4
LEJS□63N□□-890M	1254.5	1070	14	5	1000	80	19.7
LEJS□63N□□-990M	1354.5	1170	14	5	1000	180	20.9
LEJS□63N□□-1190M	1554.5	1370	16	6	1200	180	23.4
LEJS□63N□□-1490M	1954.5	1770	20	8	1600	180	28.9
LEJS□63N□□-1790M	2254.5	2070	24	10	2000	80	32.7

Motor Mounting, Applicable Motor Dimensions [mm]

Mounting type	FA		FB	FC	FD	FE (Max.)	FJ	FK
	Mounting type	Applicable motor						
NZ	M5 x 0.8	ø5.8	7	ø70	50	3.3	14	30 ±1
NY	M4 x 0.7	ø4.5	6	ø70	50	3.3	11	30 ±1
NX	M5 x 0.8	ø5.8	6	ø63	40	3.5	9	20 ±1
NW	M5 x 0.8	ø5.8	7	ø70	50	3.3	9	25 ±1
NV	M4 x 0.7	ø4.5	6	ø63	40	3.5	9	20 ±1
NU	M5 x 0.8	ø5.8	7	ø70	50	3.3	11	23 ±1
NT	M5 x 0.8	ø5.8	7	ø70	50	3.3	12	30 ±1

Motorless Type

Electric Actuator/High Rigidity Slider Type Ball Screw Drive

LEJS100-X400

RoHS

How to Order

LEJS100 N B – 500 T – X400

Motorless type ❶ ❷ With top cover type

❶ **Lead [mm]**

H	50
A	25
B	10

❷ **Stroke [mm]**

200	200
300	300
400	400
500	500
600	600
800	800
1000	1000
1200	1200
1500	1500

Specifications

Actuator specifications	**Stroke*1 [mm]**			200, 300, 400, 500, 600, 800, 1000, 1200, 1500		
	Lead [mm]			50	25	10
	Work load*2 [kg]	Horizontal	3000 [mm/s²]	60	150	400
			5000 [mm/s²]	43	93	150
			10000 [mm/s²]	22	36	—
		Vertical	3000 [mm/s²]	14	29	80
			5000 [mm/s²]	12	29	30
			10000 [mm/s²]	8	9	—
	Max. speed*3 [mm/s]	Stroke range	200 to 800	2300	1250	500
			1000	1600	800	320
			1200	1200	600	240
			1500	900	450	180
	Max. acceleration/deceleration [mm/s²]			10000		
	Positioning repeatability [mm]			±0.01		
	Lost motion*4 [mm]			0.05 or less		
	Ball screw specifications	Thread size [mm]		ø25		
		Shaft length [mm]		Stroke + 284.5		
	Impact/Vibration resistance*5 [m/s²]			50/20		
	Actuation type			Ball screw		
	Guide type			Linear guide		
	Static allowable moment*6 [N·m]	Mep (Pitching)		805		
		Mey (Yawing)		771		
		Mer (Rolling)		939		
	Operating temperature range [°C]			5 to 40		
	Operating humidity range [%RH]			90 or less (No condensation)		
	Enclosure			IP10 (Excludes motor mounting part)		
Other*7 specifications	**Actuation unit weight [kg]**			4.58		
	Other inertia [kg·cm²]			0.43		
	Friction coefficient			0.05		
	Mechanical efficiency			0.8		
Reference motor specifications	**Motor type**			AC servo motor (200 VAC)		
	Rated output capacity [W]			750		
	Rated torque [N·m]			2.4		
	Rated rotation [rpm]			3000		

*1 Strokes other than those listed in the table above are available as special orders. Please contact SMC for further details.
*2 For details, refer to "Speed–Work Load Graph (Guide)" on page 94.
*3 The allowable speed changes according to the stroke.
*4 A reference value for correcting errors in reciprocal operation
*5 Impact resistance: No malfunction occurred when the actuator was tested with a drop tester in both an axial direction and a perpendicular direction to the lead screw. (The test was performed with the actuator in the initial state.)
Vibration resistance: No malfunction occurred in a test ranging between 45 to 2000 Hz. The test was performed in both an axial direction and a perpendicular direction to the lead screw. (The test was performed with the actuator in the initial state.)
*6 The static allowable moment is the amount of static moment which can be applied to the actuator when it is stopped.
If the product is exposed to impact or repeated load, be sure to take adequate safety measures when using the product.
*7 Each value is only to be used as a guide to select a motor of the appropriate capacity.
* Values in this specifications table are the allowable values of the actuator body with the standard motor mounted. Do not use the actuator so that it exceeds these values.
* Before mounting the coupling, remove any dust, oil, etc., adhered to the shaft and the inner surface of the coupling.
* This product does not come with a motor, motor mounting screws, or couplings. They should be prepared separately by the customer.
* Take measures to prevent the loosening of the motor mounting screws.
* Do not allow collisions at either end of the table traveling distance. Additionally, when running the positioning operation, do not set within 7 mm of both ends.

Dimensions

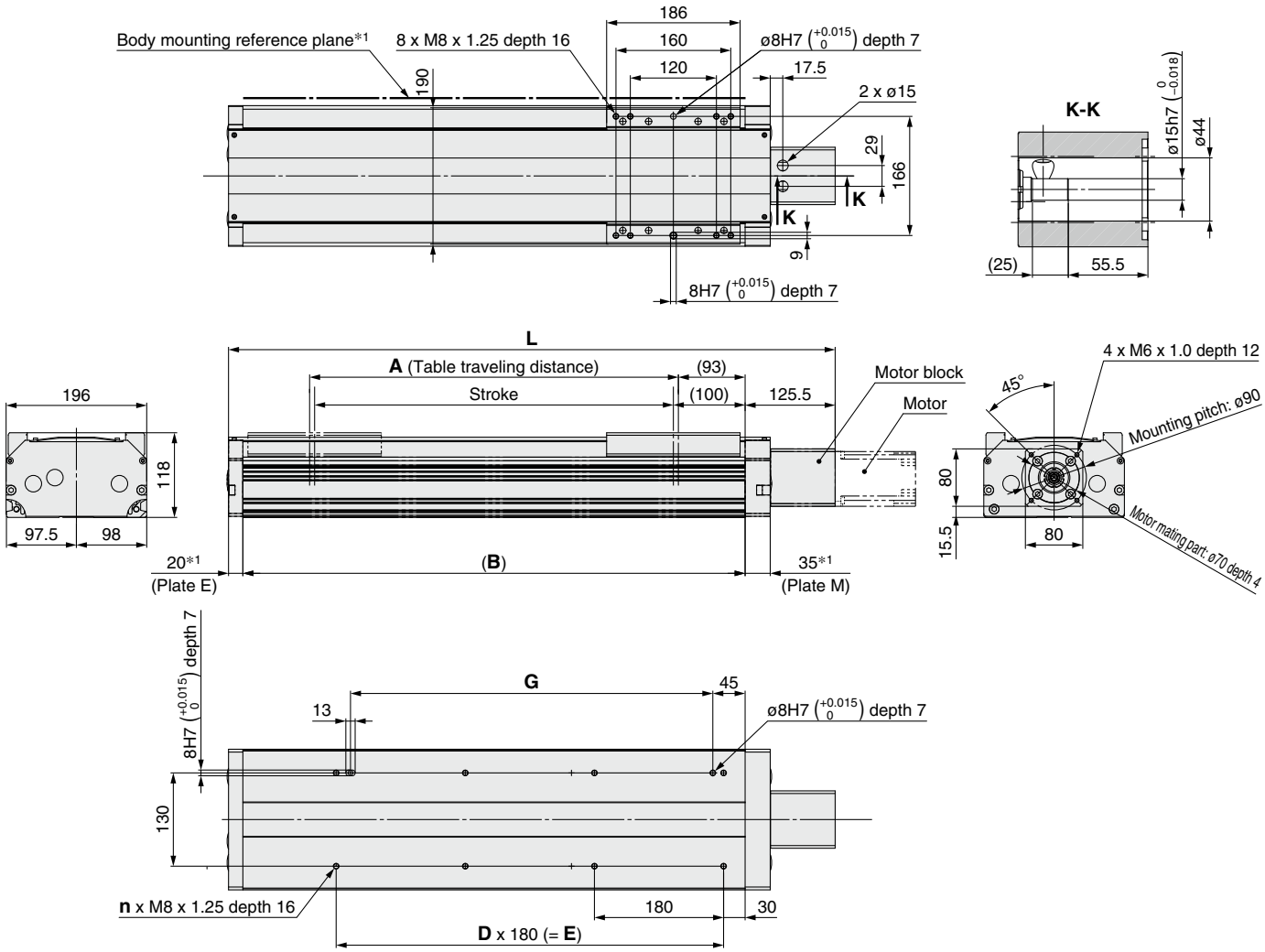

Recommended coupling

Manufacturer	Part no.
Nabeya Bi-tech Kaisha	MJT-40C-RD-15-19
Miki Pulley Co., Ltd	ALS-040-B-15B-19B
KTR Japan Co., Ltd.	ROTEX-GS19-98Sha-GS-2.5-ø15-2.5-ø19
SUNGIL Machinery Co., Ltd.	SJCB-40C-GR-15X19

*1 When mounting the actuator using the body mounting reference plane, set the height of the opposite surface or pin to be 5 mm or more. (Recommended height: 6 mm)
The surfaces of plates M and E on the ends of the product may slightly protrude from the body mounting reference plane (Body/B dimension range). Be sure to provide a clearance of 1 mm or more to avoid interference.

Dimensions and Weight

Stroke	L	A	B	n	D	E	G	Weight [kg]
200	545.5	214	400	6	2	360	325	17.6
300	645.5	314	500	6	2	360	325	19.7
400	745.5	414	600	8	3	540	505	21.8
500	845.5	514	700	8	3	540	505	23.9
600	945.5	614	800	10	4	720	685	26
800	1145.5	814	1000	12	5	900	865	30.2
1000	1345.5	1014	1200	14	6	1080	1045	34.3
1200	1545.5	1214	1400	16	7	1260	1225	38.5
1500	1845.5	1514	1700	20	9	1620	1585	44.8

Motor Mounting

- When mounting a hub, remove all oil content, dust, and dirt adhered to the shaft and the inside of the hub.
- This product does not include the motor and motor mounting screws. (Provided by the customer) Prepare a motor with a round shaft end.
- Take measures to prevent the loosening of the motor mounting screws.

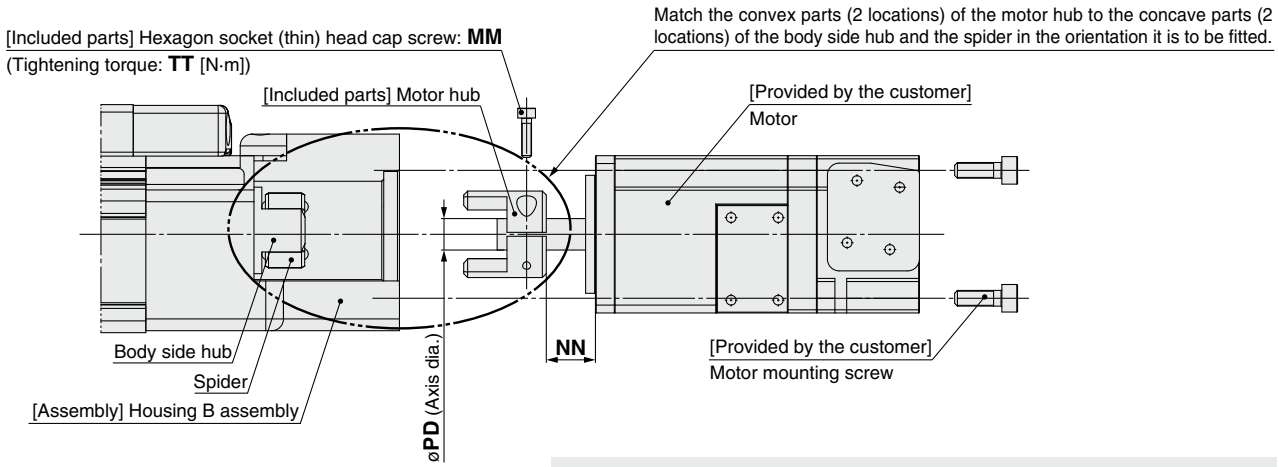

Mounting procedure

1) Secure the motor hub to the motor (provided by the customer) with the MM hexagon socket head cap screw.
2) Check the motor hub position, and then insert it.
3) Secure the motor to the housing B assembly with the motor mounting screws (provided by the customer).

Dimensions

[mm]

Size	Mounting type	MM	TT	NN	PD
40	NZ	M2.5 x 10	0.65	12.5	8
	NY	M2.5 x 10	0.65	12.5	8
	NX	M2.5 x 10	0.65	7	8
63	NZ	M3 x 12	1.5	18	14
	NY	M4 x 12	2.7	18	11
	NX	M4 x 12	2.7	8	9
	NW	M4 x 12	2.7	12	9
	NV	M4 x 12	2.7	8	9
	NU	M4 x 12	2.7	12	11
	NT	M3 x 12	1.5	18	12

Included Parts List

Size: 40

Description	Quantity	Note
Motor hub	1	—
Hexagon socket head cap screw (to secure the hub)	1	M2.5 x 10: Mounting type “NZ,” “NY,” “NX”

Size: 63

Description	Quantity	Note
Motor hub	1	—
Hexagon socket head cap screw (to secure the hub)	1	M3 x 12: Mounting type “NZ,” “NT”
Hexagon socket thin head cap screw (to secure the hub)		M4 x 12: Mounting type “NY,” “NX,” “NW,” “NV,” “NU”

LEJS Series
Motor Mounting Parts

Motor Flange Option

As the mounting type “NZ” is selected for the model and this option is mounted, the mounting types that can be used are shown below.

How to Order

LEJ－MF 63 D－NY

❶ ❷

❶ Size

40	For LEJ40
63	For LEJ63

❷ Mounting type

NY
NX
NW
NV
NU
NT

∗ Component parts vary depending on the mounting type. Refer to the “Component Parts” on page 115.

Compatible Motors and Mounting Types∗2

Applicable motor model		Size/Mounting type									
Manufacturer	Series	40			63						
		NZ	NY	NX	NZ	NY	NX	NW	NV	NU	NT
Mitsubishi Electric Corporation	MELSERVO JN/J4/J5	●	—	—	●	—	—	—	—	—	—
YASKAWA Electric Corporation	Σ-V/7/X	●∗1	—	—	●	—	—	—	—	—	—
SANYO DENKI CO., LTD.	SANMOTION R	●	—	—	●	—	—	—	—	—	—
OMRON Corporation	OMNUC G5/1S	●	—	—	—	●	—	—	—	—	—
Panasonic Corporation	MINAS A5/A6	● (MHMF only)	●	—	—	●	—	—	—	—	—
FANUC CORPORATION	βis (-B)	●	—	—	● (β1 only)	—	—	●	—	—	—
NIDEC SANKYO CORPORATION	S-FLAG	●	—	—	●	—	—	—	—	—	—
KEYENCE CORPORATION	SV/SV2	●∗1	—	—	●	—	—	—	—	—	—
FUJI ELECTRIC CO., LTD.	ALPHA7	●	—	—	●	—	—	—	—	—	—
Rockwell Automation, Inc. (Allen-Bradley)	Kinetix MP/VP/TL	● (TL only)	—	—	—	—	● (MP/VP only)	—	—	—	● (TL only)
Beckhoff Automation GmbH	AM 30/31/80/81	●	—	—	—	—	● (80/81 only)	—	● (30 only)	● (31 only)	—
Siemens AG	SIMOTICS S-1FK7	—	—	●	—	—	●	—	—	—	—
Delta Electronics, Inc.	ASDA-A2	●	—	—	●	—	—	—	—	—	—
ANCA Motion	AMD2000	●	—	—	●	—	—	—	—	—	—

∗1 For some motors, the connector may protrude from the motor body. Be sure to check for interference with the mounting surface before selecting a motor.

∗2 The compatible motors and mounting types are typical examples. Select the mounting type after referring to the “Motor Mounting, Applicable Motor Dimensions” tables on the following actuator body “Dimensions” pages.

Dimensions: Motor Flange Option

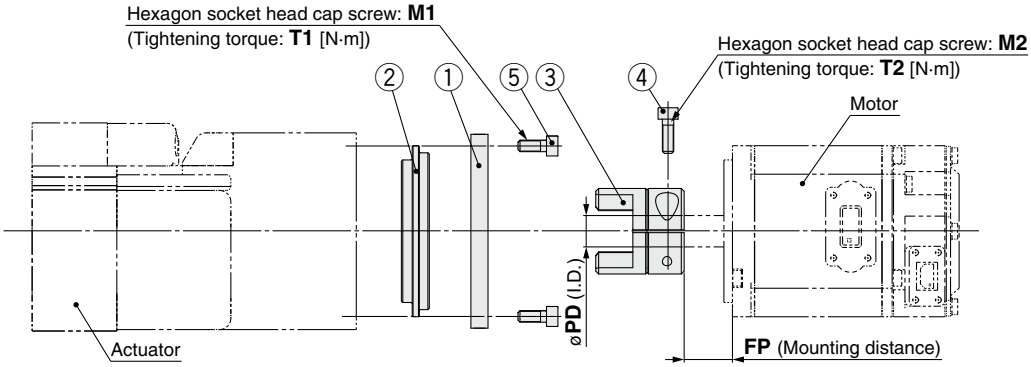

Motor plate details

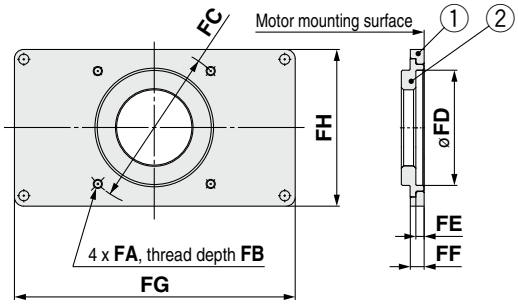

Dimensions

[mm]

Size	Mounting type	FA	FB	FC	FD	FE	FF	FG	FH	M1	T1	M2	T2	PD	FP
40	NY	M3 x 0.5	6	ø45	30	3.5	6	99	49	M4 x 12	2.7	M2.5 x 10	0.65	8	12.5
	NX	—	—	—	—	—	—	—	—	—	—	M2.5 x 10	0.65	8	7
63	NY	M4 x 0.7	6	ø70	50	3.5	6	123	68	M4 x 12	2.7	M4 x 12	2.7	11	18
	NX	M5 x 0.8	6	ø63	40	3.5	6	123	68	M4 x 12	2.7	M4 x 12	2.7	9	8
	NW	—	—	—	—	—	—	—	—	—	—	M4 x 12	2.7	9	12
	NV	M4 x 0.7	6	ø63	40	3.5	6	123	68	M4 x 12	2.7	M4 x 12	2.7	9	8
	NU	—	—	—	—	—	—	—	—	—	—	M4 x 12	2.7	11	12
	NT	—	—	—	—	—	—	—	—	—	—	M3 x 12	1.5	12	18

Component Parts

Size: 40

No.	Description	Quantity	
		Mounting type	
		NY	NX
1	Motor plate	1	—
2	Ring	1	—
3	Hub (Motor side)	1	1
4	Hexagon socket thin head cap screw	1	1
5	Hexagon socket head cap screw	4	—

Size: 63

No.	Description	Quantity					
		Mounting type					
		NY	NX	NW	NV	NU	NT
1	Motor plate	1	1	—	1	—	—
2	Ring	1	1	—	1	—	—
3	Hub (Motor side)	1	1	1	1	1	1
4	Hexagon socket thin head cap screw	1	1	1	1	1	1
5	Hexagon socket head cap screw	4	4	—	4	—	—

LEJS40, 63 Series
Auto Switch Mounting

Auto Switch Mounting Position

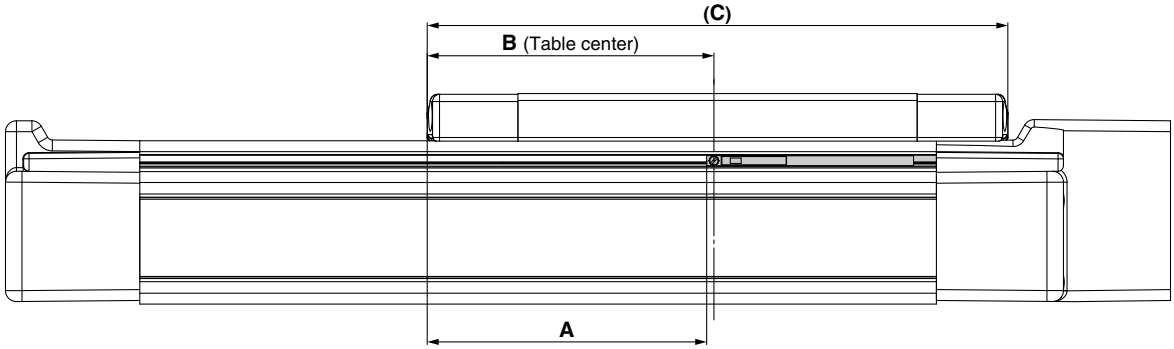

[mm]

Model	Size	A	B	C	Operating range
LEJS	40	77	80	160	5.5
	63	83	86	172	7.0

∗ Since the operating range is provided as a guideline including hysteresis, it cannot be guaranteed (assuming approximately ±30% dispersion). It may change substantially depending on the ambient environment.

Auto Switch Mounting

When mounting the auto switches, they should be inserted into the actuator's auto switch mounting groove as shown in the drawing below. After setting in the mounting position, use a flat head watchmaker's screwdriver to tighten the auto switch mounting screw that is included.

Auto Switch Mounting Screw Tightening Torque

[N·m]

Auto switch model	Tightening torque
D-M9□(V) D-M9□W(V)	0.10 to 0.15

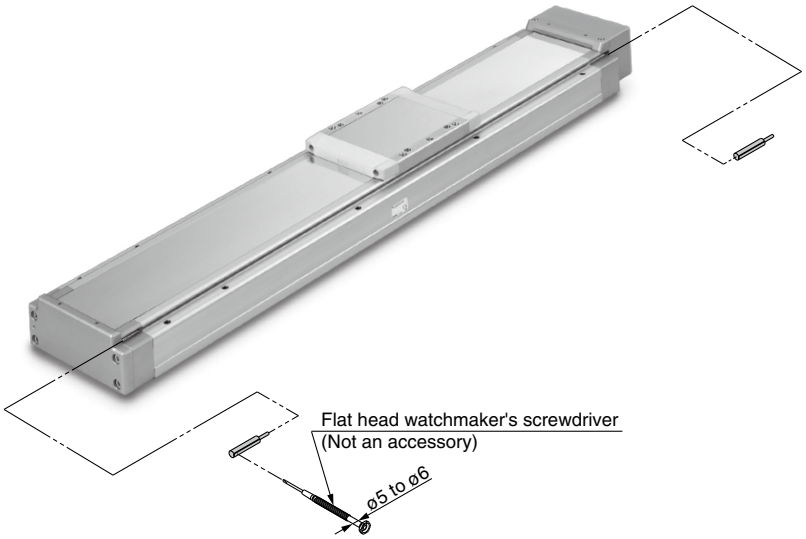

∗ When tightening the auto switch mounting screw (included with the auto switch), use a watchmaker's screwdriver with a handle diameter of about 5 to 6 mm.

LEJS100-X400
Side Supports/Auto Switch Mounting

Side Supports

Side supports: MY-S50A

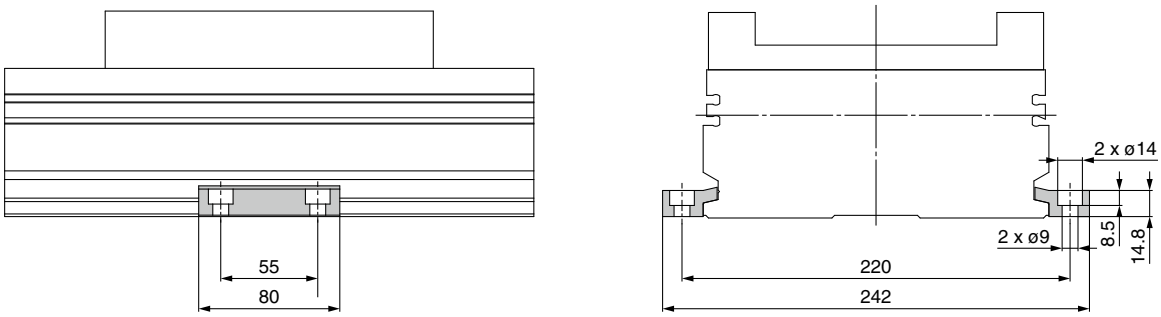

∗ The side supports consist of a set of right and left brackets.

Usage Guide for Side Supports

When mounting with the side supports, be sure to use the number of side supports (N) and the support spacing (L1) shown in the figure and table below as a guide.

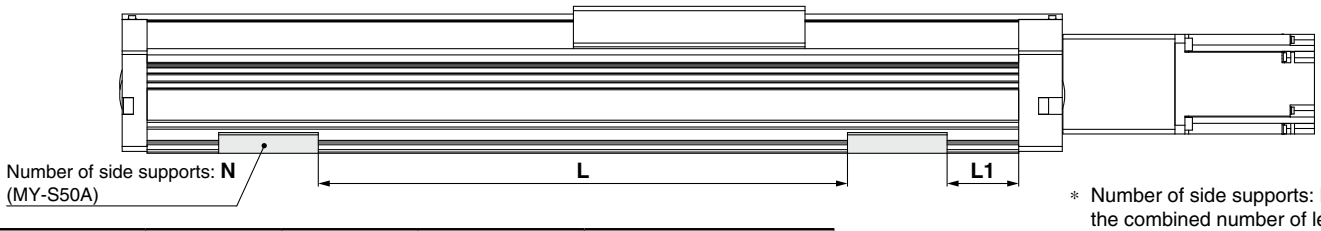

∗ Number of side supports: N is the combined number of left and right supports.

Stroke	**N** (Qty.)	**L1** [mm]	Screw size	Max. tightening torque [N·m]
200	6	15	M8 x 1.25	12.5
300	6			
400	6			
500	6			
600	8			
800	8			
1000	10			
1200	10			
1500	14			

· **Secure the side supports using the support spacing (L) in the table above.**
· When mounting with the side supports, use in combination with the pin on the bottom of the body.
· For vertical or bottom mounting, please refrain from using only the side supports.

Auto Switch Mounting

When mounting an auto switch, first, hold a switch spacer between your fingers and press it into the slot. When doing this, confirm that it is set in the correct mounting orientation, or reinsert it if necessary. Next, insert the auto switch into the slot and slide it until it is positioned under the switch spacer.
After confirming the mounting position, use a flat head watchmaker's screwdriver to tighten the included auto switch mounting screw.

Auto Switch Mounting Screw Tightening Torque

Auto switch model	Tightening torque
D-M9□(V)	0.10 to 0.15
D-M9□W(V)	

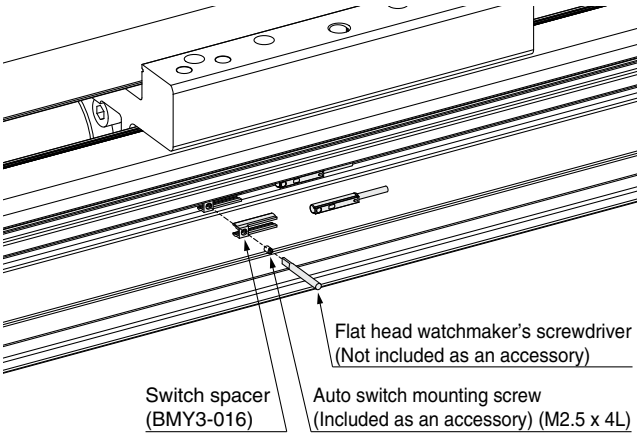

Solid State Auto Switch Direct Mounting Type
D-M9N(V)/D-M9P(V)/D-M9B(V)

Refer to the SMC website for details on products that are compliant with international standards.

Grommet

- **2-wire load current is reduced (2.5 to 40 mA).**
- **Using flexible cable as standard spec.**

⚠Caution

Precautions

Fix the auto switch with the existing screw installed on the auto switch body. The auto switch may be damaged if a screw other than the one supplied is used.

Auto Switch Specifications

PLC: Programmable Logic Controller

D-M9□, D-M9□V (With indicator light)						
Auto switch model	D-M9N	D-M9NV	D-M9P	D-M9PV	D-M9B	D-M9BV
Electrical entry direction	In-line	Perpendicular	In-line	Perpendicular	In-line	Perpendicular
Wiring type	3-wire				2-wire	
Output type	NPN		PNP		—	
Applicable load	IC circuit, Relay, PLC				24 VDC relay, PLC	
Power supply voltage	5, 12, 24 VDC (4.5 to 28 V)				—	
Current consumption	10 mA or less				—	
Load voltage	28 VDC or less		—		24 VDC (10 to 28 VDC)	
Load current	40 mA or less				2.5 to 40 mA	
Internal voltage drop	0.8 V or less at 10 mA (2 V or less at 40 mA)				4 V or less	
Leakage current	100 μA or less at 24 VDC				0.8 mA or less	
Indicator light	Red LED illuminates when turned ON.					
Standards	CE/UKCA marking					

Oilproof Flexible Heavy-duty Lead Wire Specifications

Auto switch model		D-M9N(V)	D-M9P(V)	D-M9B(V)
Sheath	Outside diameter [mm]	ø2.6		
Insulator	Number of cores	3 cores (Brown/Blue/Black)		2 cores (Brown/Blue)
	Outside diameter [mm]	ø0.88		
Conductor	Effective area [mm²]	0.15		
	Strand diameter [mm]	ø0.05		
Min. bending radius [mm] (Reference values)		17		

∗ Refer to the **Web Catalog** for solid state auto switch common specifications.
∗ Refer to the **Web Catalog** for lead wire lengths.

Weight

[g]

Auto switch model		D-M9N(V)	D-M9P(V)	D-M9B(V)
Lead wire length	0.5 m (**Nil**)	8		7
	1 m (**M**)	14		13
	3 m (**L**)	41		38
	5 m (**Z**)	68		63

Dimensions

[mm]

D-M9□

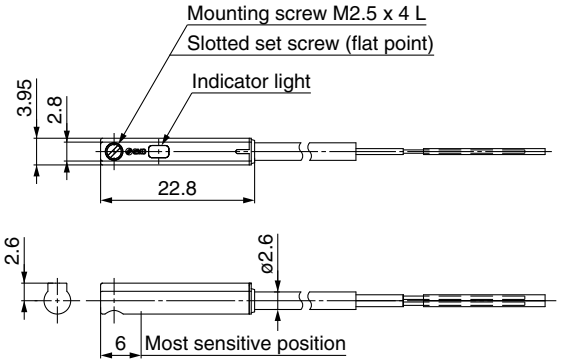

D-M9□V

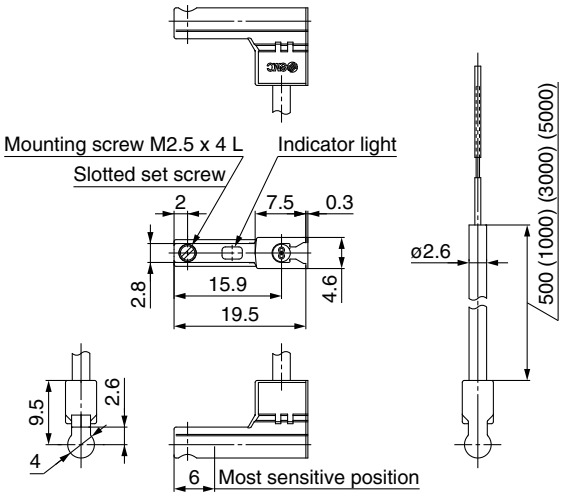

Normally Closed Solid State Auto Switch Direct Mounting Type
D-M9NE(V)/D-M9PE(V)/D-M9BE(V)

Refer to the SMC website for details on products that are compliant with international standards.

Grommet

- **Output signal turns on when no magnetic force is detected.**
- **Can be used for the actuator adopted by the solid state auto switch D-M9 series (excluding special order products)**

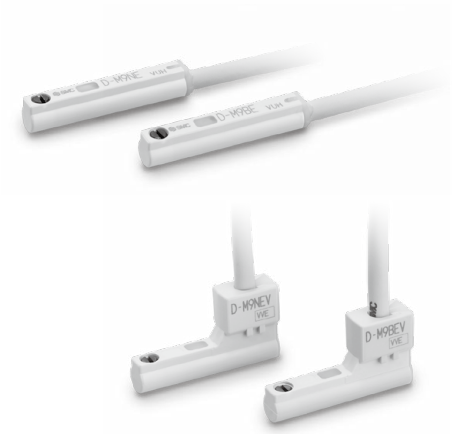

⚠Caution

Precautions

Fix the auto switch with the existing screw installed on the auto switch body. The auto switch may be damaged if a screw other than the one supplied is used.

Auto Switch Specifications

PLC: Programmable Logic Controller

D-M9□E, D-M9□EV (With indicator light)						
Auto switch model	D-M9NE	D-M9NEV	D-M9PE	D-M9PEV	D-M9BE	D-M9BEV
Electrical entry direction	In-line	Perpendicular	In-line	Perpendicular	In-line	Perpendicular
Wiring type	3-wire				2-wire	
Output type	NPN		PNP		—	
Applicable load	IC circuit, Relay, PLC				24 VDC relay, PLC	
Power supply voltage	5, 12, 24 VDC (4.5 to 28 V)				—	
Current consumption	10 mA or less				—	
Load voltage	28 VDC or less		—		24 VDC (10 to 28 VDC)	
Load current	40 mA or less				2.5 to 40 mA	
Internal voltage drop	0.8 V or less at 10 mA (2 V or less at 40 mA)				4 V or less	
Leakage current	100 μA or less at 24 VDC				0.8 mA or less	
Indicator light	Red LED illuminates when turned ON.					
Standards	CE/UKCA marking					

Oilproof Flexible Heavy-duty Lead Wire Specifications

Auto switch model		D-M9NE(V)	D-M9PE(V)	D-M9BE(V)
Sheath	Outside diameter [mm]	ø2.6		
Insulator	Number of cores	3 cores (Brown/Blue/Black)		2 cores (Brown/Blue)
	Outside diameter [mm]	ø0.88		
Conductor	Effective area [mm²]	0.15		
	Strand diameter [mm]	ø0.05		
Min. bending radius [mm] (Reference values)		17		

∗ Refer to the **Web Catalog** for solid state auto switch common specifications.
∗ Refer to the **Web Catalog** for lead wire lengths.

Weight

[g]

Auto switch model		D-M9NE(V)	D-M9PE(V)	D-M9BE(V)
Lead wire length	0.5 m (**Nil**)	8		7
	1 m (**M**)∗1	14		13
	3 m (**L**)	41		38
	5 m (**Z**)∗1	68		63

∗1 The 1 m and 5 m options are produced upon receipt of order.

Dimensions

[mm]

D-M9□E

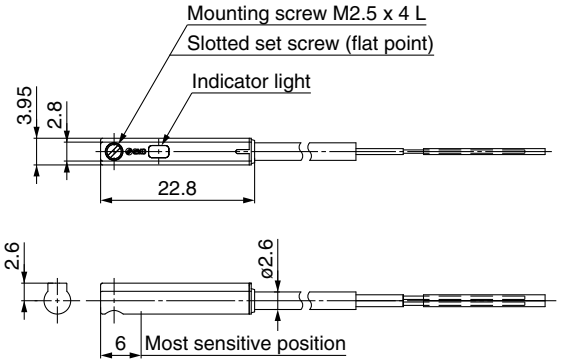

D-M9□EV

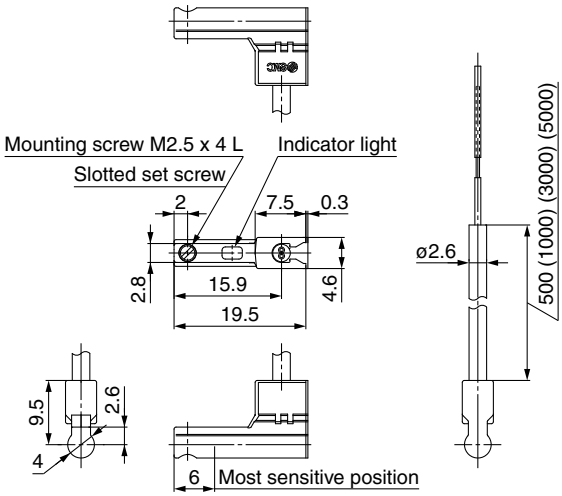

2-Color Indicator Solid State Auto Switch Direct Mounting Type
D-M9NW(V)/D-M9PW(V)/D-M9BW(V)

Refer to the SMC website for details on products that are compliant with international standards.

Grommet

- **2-wire load current is reduced (2.5 to 40 mA).**
- **Using flexible cable as standard spec.**
- **The proper operating range can be determined by the color of the light. (Red → Green ← Red)**

⚠Caution

Precautions

Fix the auto switch with the existing screw installed on the auto switch body. The auto switch may be damaged if a screw other than the one supplied is used.

Auto Switch Specifications

PLC: Programmable Logic Controller

D-M9□W, D-M9□WV (With indicator light)						
Auto switch model	D-M9NW	D-M9NWV	D-M9PW	D-M9PWV	D-M9BW	D-M9BWV
Electrical entry direction	In-line	Perpendicular	In-line	Perpendicular	In-line	Perpendicular
Wiring type	3-wire				2-wire	
Output type	NPN		PNP		—	
Applicable load	IC circuit, Relay, PLC				24 VDC relay, PLC	
Power supply voltage	5, 12, 24 VDC (4.5 to 28 V)				—	
Current consumption	10 mA or less				—	
Load voltage	28 VDC or less		—		24 VDC (10 to 28 VDC)	
Load current	40 mA or less				2.5 to 40 mA	
Internal voltage drop	0.8 V or less at 10 mA (2 V or less at 40 mA)				4 V or less	
Leakage current	100 μA or less at 24 VDC				0.8 mA or less	
Indicator light	Operating range ····· Red LED illuminates. Proper operating range ····· Green LED illuminates.					
Standards	CE/UKCA marking					

Oilproof Flexible Heavy-duty Lead Wire Specifications

Auto switch model		D-M9NW(V)	D-M9PW(V)	D-M9BW(V)
Sheath	Outside diameter [mm]	ø2.6		
Insulator	Number of cores	3 cores (Brown/Blue/Black)		2 cores (Brown/Blue)
	Outside diameter [mm]	ø0.88		
Conductor	Effective area [mm²]	0.15		
	Strand diameter [mm]	ø0.05		
Min. bending radius [mm] (Reference values)		17		

∗ Refer to the **Web Catalog** for solid state auto switch common specifications.
∗ Refer to the **Web Catalog** for lead wire lengths.

Weight

[g]

Auto switch model		D-M9NW(V)	D-M9PW(V)	D-M9BW(V)
Lead wire length	0.5 m (**Nil**)	8		7
	1 m (**M**)	14		13
	3 m (**L**)	41		38
	5 m (**Z**)	68		63

Dimensions

[mm]

D-M9□W

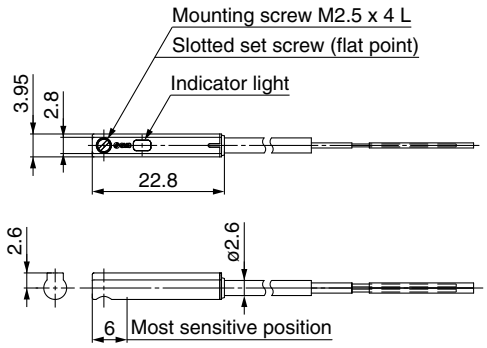

D-M9□WV

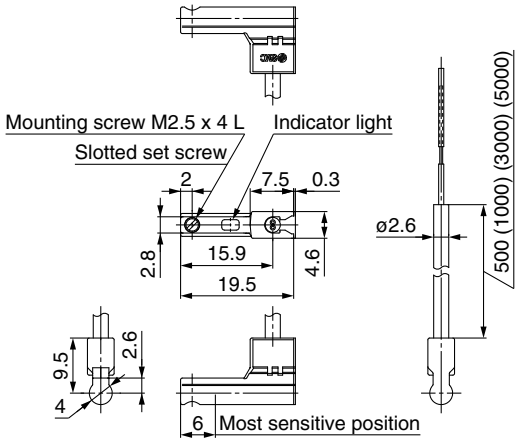

LEJS Series
Specific Product Precautions 1

Be sure to read this before handling the products. Refer to the back cover for safety instructions. For electric actuator and auto switch precautions, refer to the "Handling Precautions for SMC Products" and the "Operation Manual" on the SMC website: https://www.smcworld.com

Design

⚠Caution

1. Do not apply a load in excess of the specification limits.

Select a suitable actuator by work load and allowable moment. If a load in excess of the specification limits is applied to the guide, adverse effects such as the generation of play in the guide, reduced accuracy, or reduced service life of the product may occur.

2. Do not use the product in applications where excessive external force or impact force is applied to it.

The product can be damaged.
The components including the motor are manufactured to precise tolerances. So that even a slight deformation may cause a malfunction or seizure.

Selection

⚠Warning

1. Do not increase the speed in excess of the specification limits.

Select a suitable actuator by the relationship of the allowable work load and speed, and the allowable speed of each stroke. If the product is used outside of the specification limits, adverse effects such as the generation of noise, reduced accuracy, or reduced service life of the product may occur.

2. When the product repeatedly cycles with partial strokes (100 mm or less), lubrication can run out. Operate it at a full stroke at least once a day or every a thousand cycles.

3. When external force is to be applied to the table, it is necessary to add the external force to the work load as the total carried load when selecting a size.

When a cable duct or flexible moving tube is attached to the actuator, the sliding resistance of the table will increase, which may lead to the malfunction of the product.

4. Depending on the shape of the motor to be mounted, some of the product's interior parts (hub, spider, etc.) may be visible from the motor mounting surface. If this is undesirable, please contact your nearest sales office for details on options such as covers.

Handling

⚠Caution

1. Never allow the table to collide with the end of stroke.

When the driver parameters, origin or programs are set incorrectly, the table may collide with the stroke end of the actuator during operation. Be sure to check these points before use.

If the table collides with the stroke end of the actuator, the guide, ball screw, belt, or internal stopper may break. This can result in abnormal operation.

Handle the actuator with care when it is used in the vertical direction as the workpiece will fall freely from its own weight.

2. The actual speed of this actuator is affected by the work load and stroke.

Check the model selection section of the catalog.

3. Do not apply a load, impact, or resistance in addition to the transferred load during return to origin.

4. Do not dent, scratch, or cause other damage to the body or table mounting surfaces.

Doing so may cause unevenness in the mounting surface, play in the guide, or an increase in the sliding resistance.

5. Do not apply strong impact or an excessive moment while mounting the product or a workpiece.

If an external force over the allowable moment is applied, it may cause play in the guide or an increase in the sliding resistance.

6. Keep the flatness of the mounting surface within 0.1 mm/500 mm.

If a workpiece or base does not sit evenly on the body of the product, play in the guide or an increase in the sliding resistance may occur.
In the case of overhang mounting (including cantilever), use a support plate or support guide to avoid deflection of the actuator body.

7. When mounting the actuator, use all mounting holes.

If all mounting holes are not used, it influences the specifications, e.g., the amount of displacement of the table increases.

8. Do not allow a workpiece to collide with the table during the positioning operation or within the positioning range.

9. Do not apply external force to the dust seal band.

Particularly during the transportation

LEJS Series
Specific Product Precautions 2

Be sure to read this before handling the products. Refer to the back cover for safety instructions. For electric actuator and auto switch precautions, refer to the "Handling Precautions for SMC Products" and the "Operation Manual" on the SMC website: https://www.smcworld.com

Handling

⚠Caution

10. When mounting the product, use screws of adequate length and tighten them with adequate torque.

Tightening the screws with a higher torque than recommended may result in a malfunction, while tightening with a lower torque can result in the displacement of the mounting position or, in extreme conditions, the actuator could become detached from its mounting position.

Body fixed

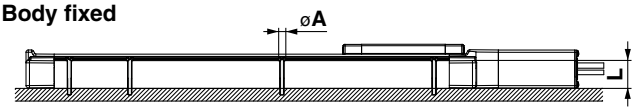

Model	Screw size	Max. tightening torque [N·m]	ø**A** [mm]	**L** [mm]
LEJS40	M5	3.0	5.5	36.5
LEJS63	M6	5.2	6.8	49.5

Workpiece fixed

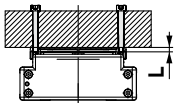

Model	Screw size	Max. tightening torque [N·m]	**L** (Max. screw-in depth) [mm]
LEJS40	M6 x 1	5.2	10
LEJS63	M8 x 1.25	12.5	12

To prevent the workpiece retaining screws from touching the body, use screws that are 0.5 mm or shorter than the maximum screw-in depth. If long screws are used, they may touch the body and cause a malfunction.

11. Do not operate by fixing the table and moving the actuator body.

12. When mounting the actuator using the body mounting reference plane, use a pin. Set the height of the pin to be 5 mm or more because of round chamfering. (Recommended height: 6 mm)

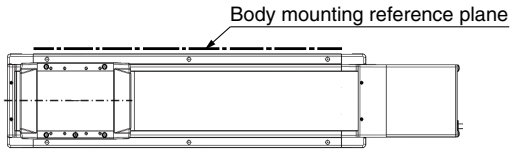

Maintenance

⚠Warning

Maintenance frequency

Perform maintenance according to the table below.

Frequency	Appearance check	Internal check
Inspection before daily operation	○	—
Inspection every 6 months/1000 km/5 million cycles*1	○	○

*1 Select whichever comes first.

- **Items for visual appearance check**
  1. Loose set screws, Abnormal amount of dirt, etc.
  2. Check for visible damage, Check of cable joint
  3. Vibration, Noise
- **Items for internal check**
  1. Lubricant condition on moving parts
     * For lubrication, use lithium grease No. 2.
  2. Loose or mechanical play in fixed parts or fixing screws

Large Slider Type

Belt Drive *LET-X11 Series*

p. 125

Model Selection

LET-X11 Series ▶p. 133

Selection Procedure

Step 1 Check the speed–work load. → **Step 2** Check the cycle time. → **Step 3** Check the allowable moment.

Selection Example

The model selection method shown below corresponds to SMC's standard motor. For use in combination with a motor from a different manufacturer, check the available product information of the motor to be used.

Operating conditions

- Work load: 100 [kg]
- Speed: 300 [mm/s]
- Acceleration/Deceleration: 3000 [mm/s²]
- Stroke: 300 [mm]
- Mounting orientation: Horizontal
- External force: 10 [N]
- Workpiece mounting condition:

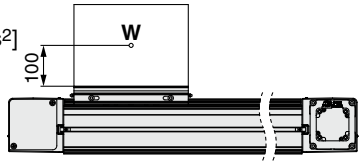

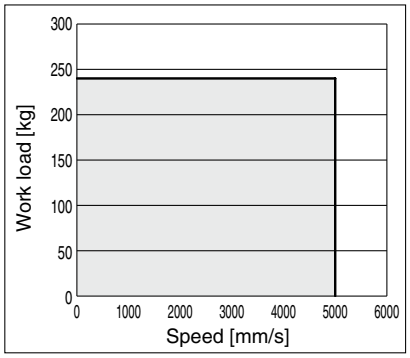

<Speed–Work Load Graph> (LET100)

Step 1 Check the speed–work load.

Select a model based on the workpiece mass and speed which are within the range of the actuator body specifications while referencing the speed–work load graph (guide) on page 126.

Selection example) The **LET100NNS-300-X11** can be temporarily selected as a possible candidate based on the graph shown on the right side.

∗ Refer to the selection method of motor manufacturers for regeneration resistance.

Step 2 Check the cycle time.

Refer to method 1 for a rough estimate, and method 2 for a more precise value.

Method 1: Check the cycle time graph. (page 127)

The graph is based on the maximum speed of each size.

Method 2: Calculation

Cycle time:

T can be found from the following equation.

$$T = T1 + T2 + T3 + T4 \text{ [s]}$$

- T1 and T3 can be found by the following equation.

$$T1 = V/a1 \text{ [s]} \qquad T3 = V/a2 \text{ [s]}$$

The acceleration and deceleration values have upper limits depending on the workpiece mass and the duty ratio. Confirm that they do not exceed the upper limit, by referring to the "Work load–Acceleration/Deceleration Graph (Guide)" on pages 128 and 129.

- T2 can be found from the following equation.

$$T2 = \frac{L - 0.5 \cdot V \cdot (T1 + T3)}{V} \text{ [s]}$$

- T4 varies depending on the motor type and load. The value below is recommended.

$$T4 = 0.05 \text{ [s]}$$

∗ The conditions for the settling time vary depending on the motor or driver to be used.

Calculation example)
T1 to T4 can be calculated as follows.

$T1 = V/a1 = 300/3000 = 0.1$ [s],

$T3 = V/a2 = 300/3000 = 0.1$ [s]

$$T2 = \frac{L - 0.5 \cdot V \cdot (T1 + T3)}{V} = \frac{300 - 0.5 \cdot 300 \cdot (0.1 + 0.1)}{300} = 0.90 \text{ [s]}$$

$T4 = 0.05$ [s]

The cycle time can be found as follows.

$T = T1 + T2 + T3 + T4$
$= 0.1 + 0.90 + 0.1 + 0.05$
$= \mathbf{1.15}$ **[s]**

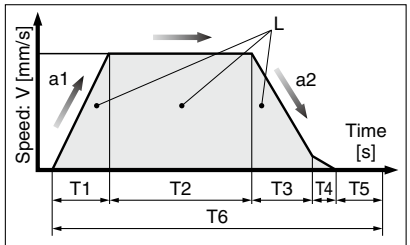

L : Stroke [mm]
V : Speed [mm/s]
a1: Acceleration [mm/s²]
a2: Deceleration [mm/s²]

T1: Acceleration time [s]
Time until reaching the set speed
T2: Constant speed time [s]
Time while the actuator is operating at a constant speed
T3: Deceleration time [s]
Time from the beginning of the constant speed operation to stop
T4: Settling time [s]
Time until positioning is completed
T5: Resting time [s]
Time the product is not running
T6: Total time [s]
Total time from T1 to T5

Duty ratio: Ratio of T to T6
T ÷ T6 x 100

Step 3 Check the allowable moment.

<Static allowable moment> (page 126)
<Dynamic allowable moment> (page 130)

Confirm the moment that applies to the actuator is within the allowable range for both static and dynamic conditions.

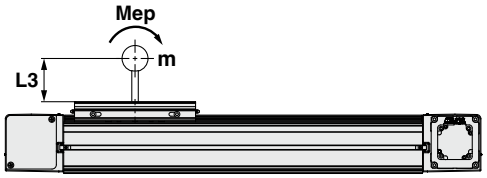

Selection example)
Select the **LET100NNS-300-X11** from the graph on the right side.
Confirm that the external force is within the allowable external force (20 [N]).
(The external force is the resistance due to cable duct, flexible trunking or air tubing.)

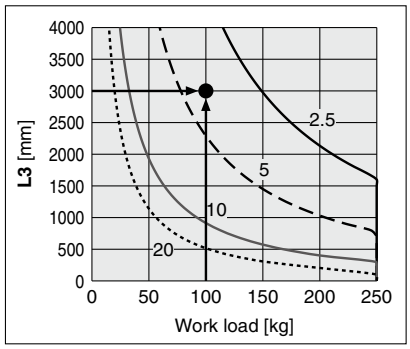

<Dynamic Allowable Moment> (LET100)

Speed–Work Load Graph (Guide)

∗ The values shown below are allowable values of the actuator body. Do not use the actuator so that it exceeds these specification ranges.

LET80

Horizontal

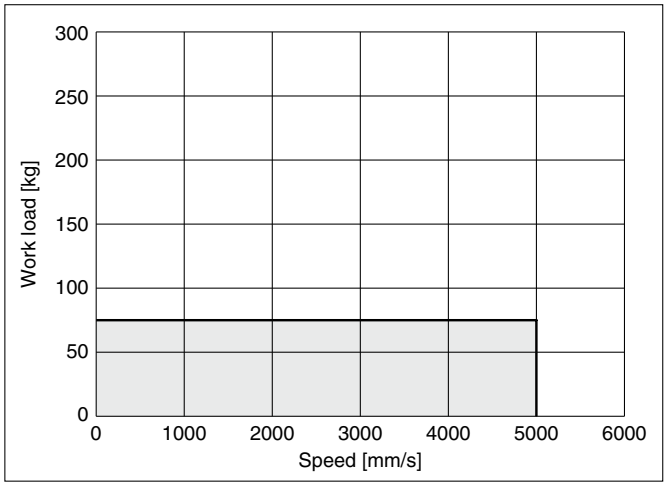

Vertical

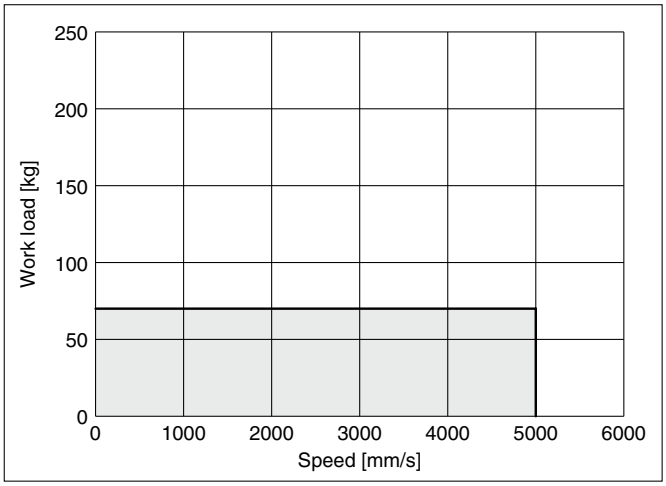

LET100

Horizontal

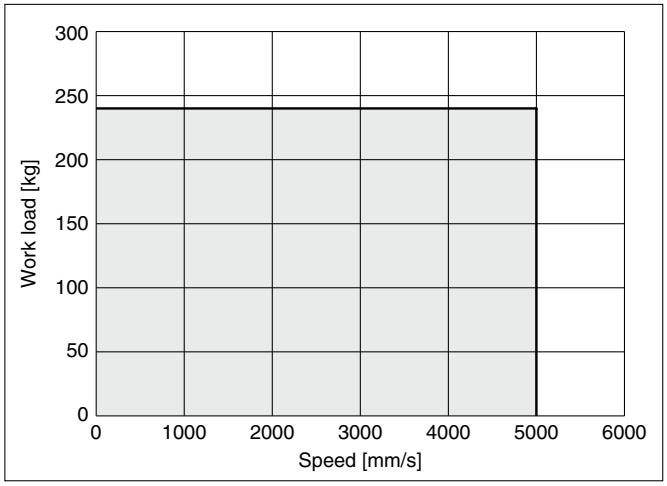

Vertical

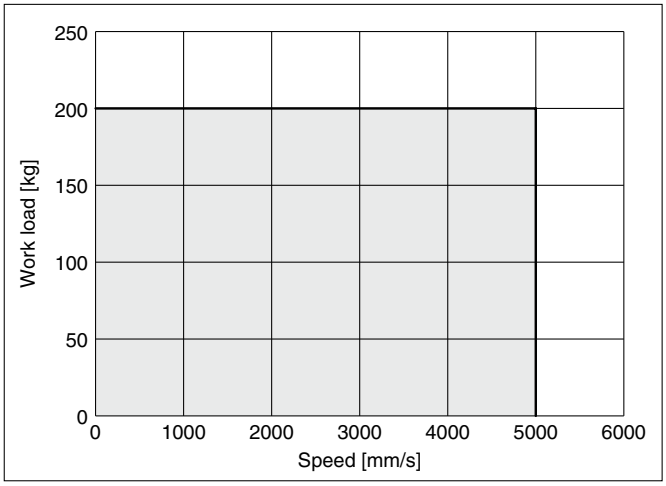

Static Allowable Moment∗1

[N·m]

Model	Size	Pitching	Yawing	Rolling
LET	**80**	380	380	114
	100	1157	1157	529

∗1 The static allowable moment is the amount of static moment which can be applied to the actuator when it is stopped.
If the product is exposed to impact or repeated load, be sure to take adequate safety measures when using the product.

Cycle Time Graph (Guide)

LET80

Reduction ratio: 1/3

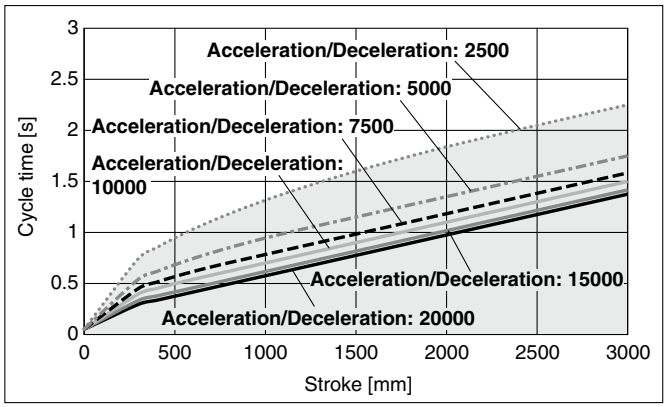

Reduction ratio: 1/5

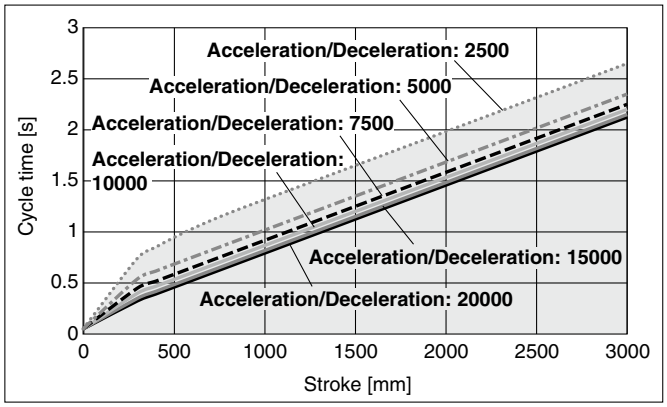

Reduction ratio: 1/9

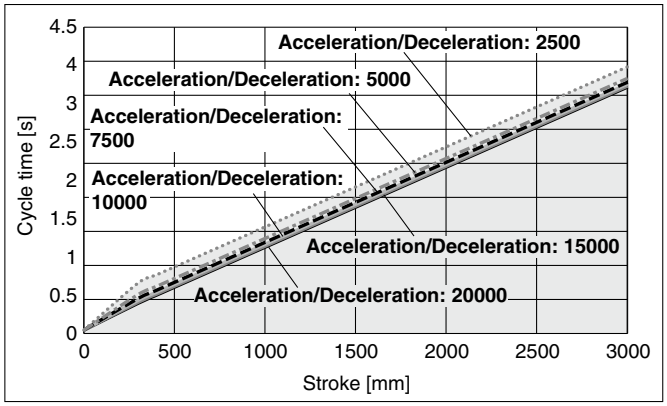

LET100

Reduction ratio: 1/3

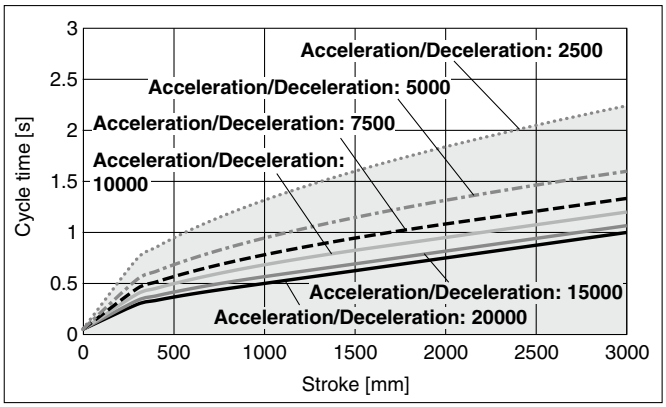

Reduction ratio: 1/5

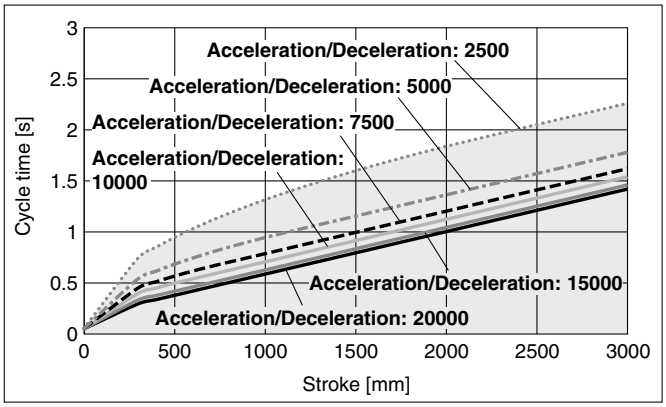

Reduction ratio: 1/9

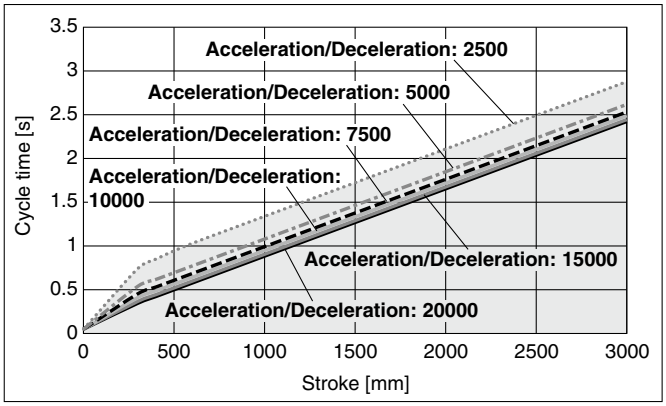

Reduction ratio: 1/15

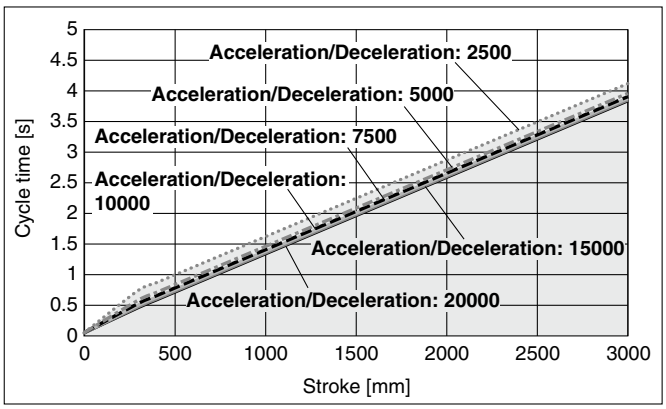

∗ These graphs are examples of when the standard motor and the reducer (motor flange option) are mounted.
∗ These graphs show the cycle time for each acceleration/deceleration.
∗ These graphs show the cycle time for each stroke at the maximum speed.

Work Load–Acceleration/Deceleration Graph (Guide)

LET80/Belt Drive: Horizontal

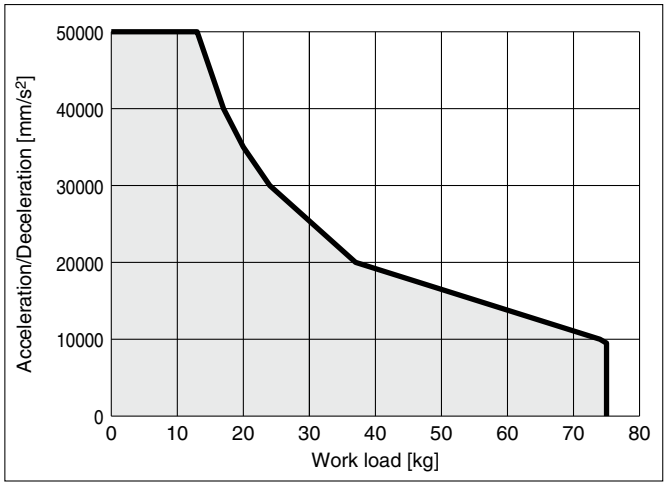

LET80/Belt Drive: Vertical*1

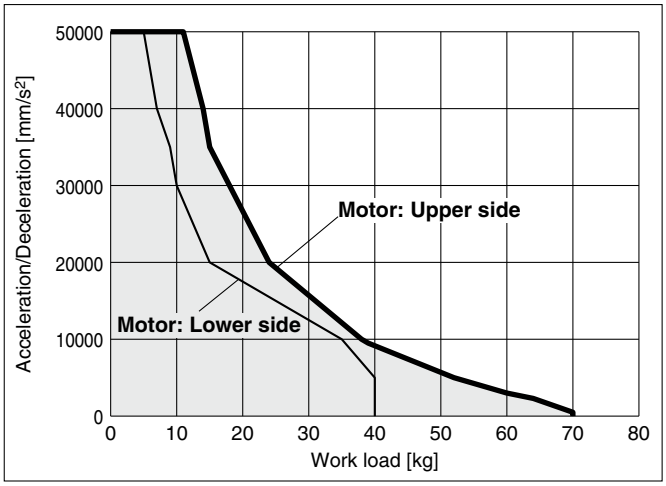

LET100/Belt Drive: Horizontal

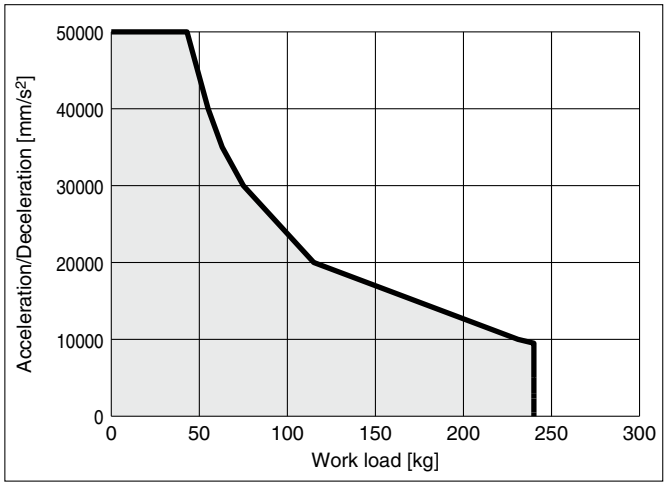

LET100/Belt Drive: Vertical*1

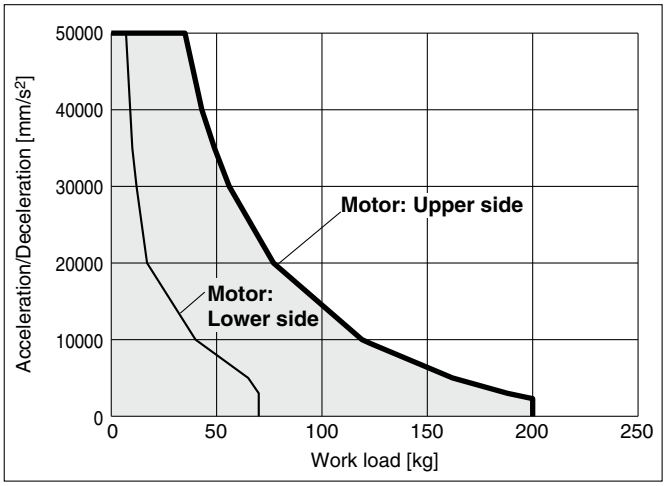

*1 For vertical actuator mounting, the specifications differ depending on the mounting position of the motor.
Be aware that actuator specifications will be reduced if the motor is mounted on the lower side (the ground side).

These graphs are examples. Determine after taking into account the load factor of the motor or driver to be used.

Work Load by Stroke–Acceleration/Deceleration Graph (Guide)

LET80

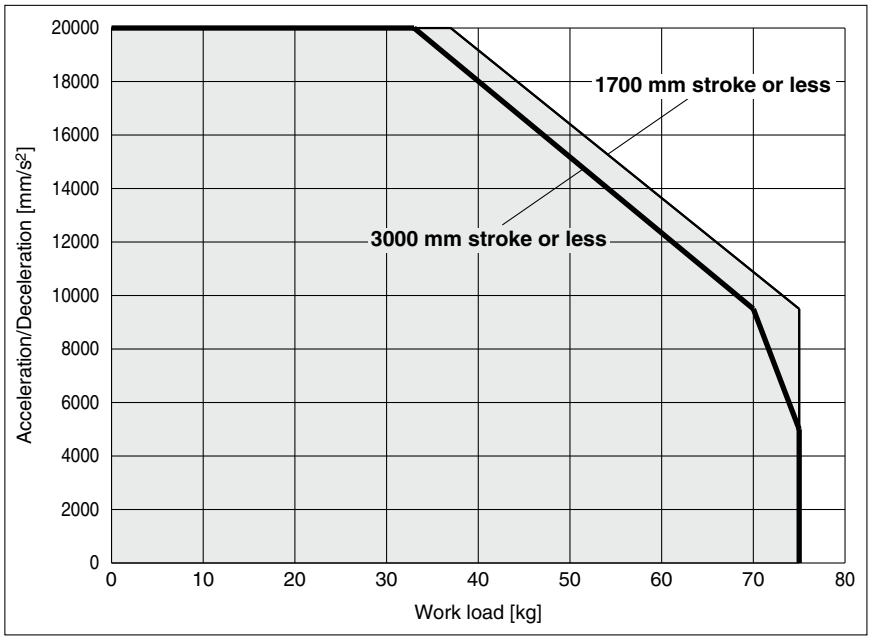

LET100

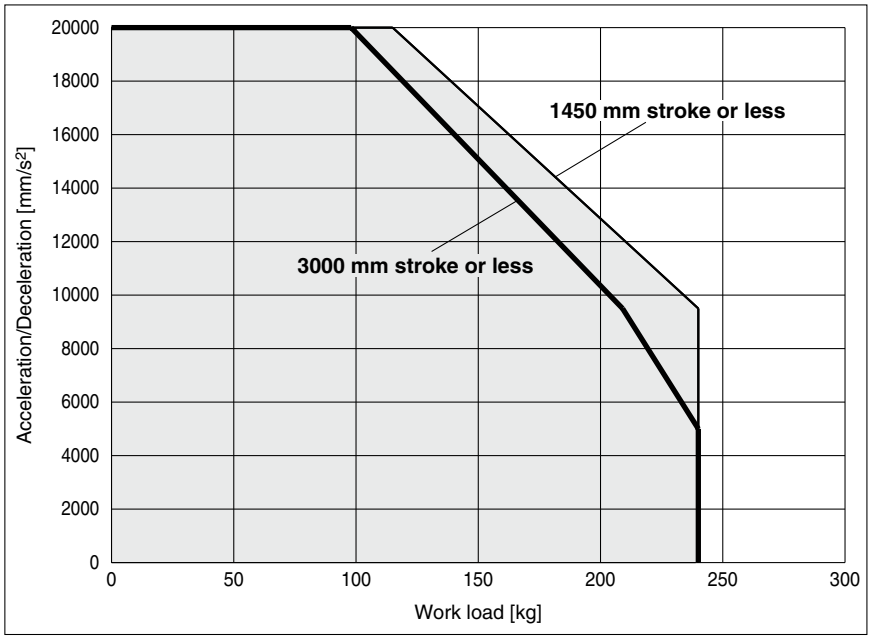

Dynamic Allowable Moment

∗ These graphs show the amount of allowable overhang (guide unit) when the center of gravity of the workpiece overhangs in one direction. When selecting the overhang, refer to the "Calculation of Guide Load Factor" or the Electric Actuator Model Selection Software for confirmation: https://www.smcworld.com

Acceleration/Deceleration ——— 2500 mm/s² ——— 5000 mm/s² - - - - 10000 mm/s² ·····20000 mm/s²

Orientation	Load overhanging direction **m** : Work load [kg] **Me**: Allowable moment [N·m] **L** : Overhang to the work load center of gravity [mm]		Model	
			LET80	**LET100**
Horizontal	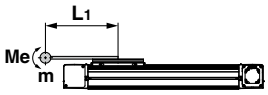	**X**	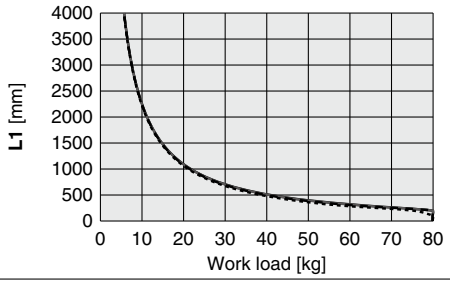	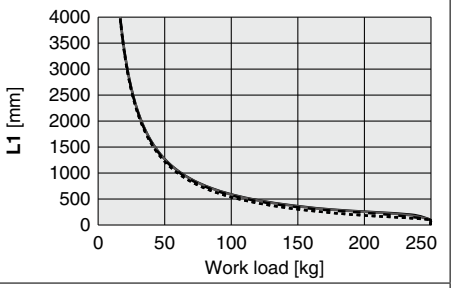
	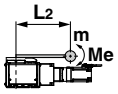	**Y**	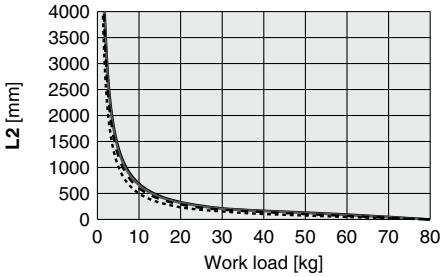	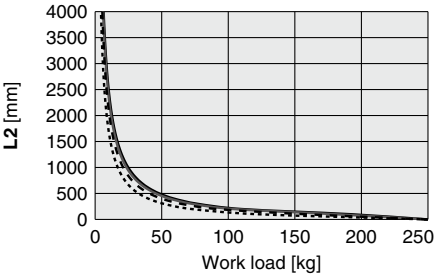
	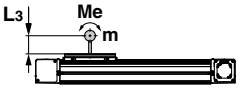	**Z**	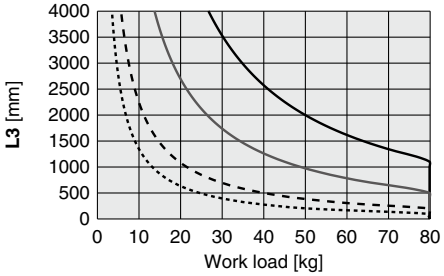	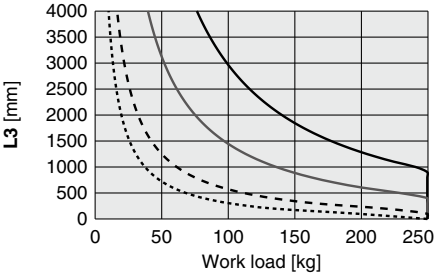
Bottom	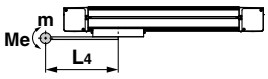	**X**	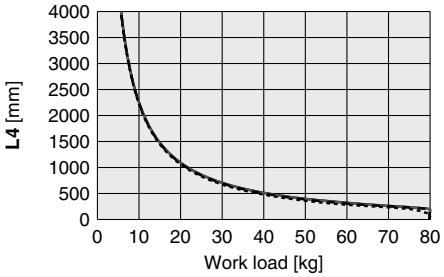	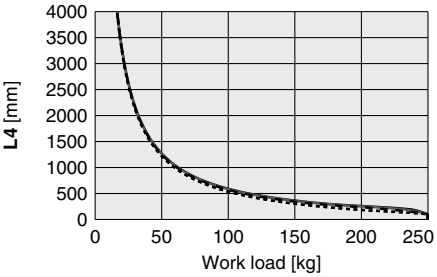
	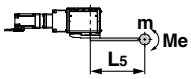	**Y**	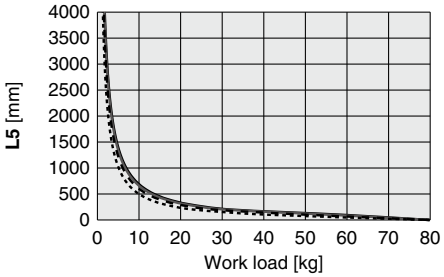	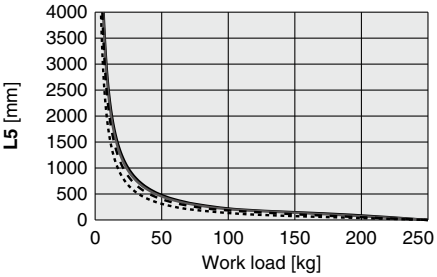
	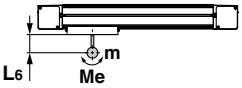	**Z**	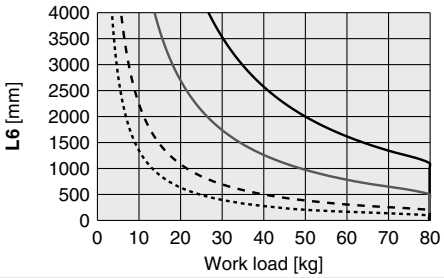	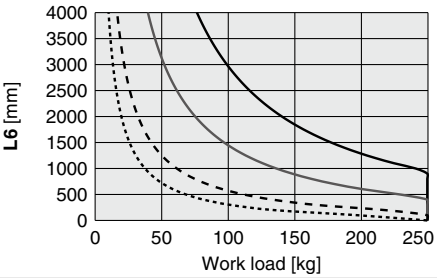

Dynamic Allowable Moment

∗ These graphs show the amount of allowable overhang (guide unit) when the center of gravity of the workpiece overhangs in one direction. When selecting the overhang, refer to the "Calculation of Guide Load Factor" or the Electric Actuator Model Selection Software for confirmation: https://www.smcworld.com

Acceleration/Deceleration ——— 2500 mm/s² ——— 5000 mm/s² - - - - 10000 mm/s² ·····20000 mm/s²

Orientation	Load overhanging direction **m** : Work load [kg] **Me**: Allowable moment [N·m] **L** : Overhang to the work load center of gravity [mm]		Model	
			LET80	**LET100**
Wall	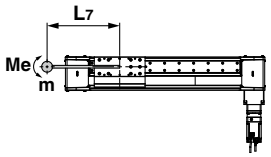	**X**	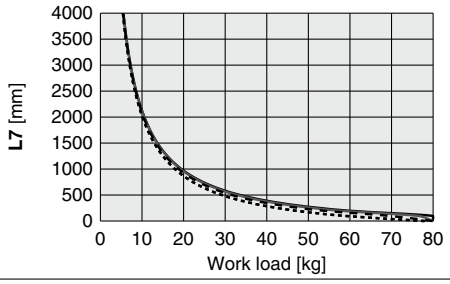	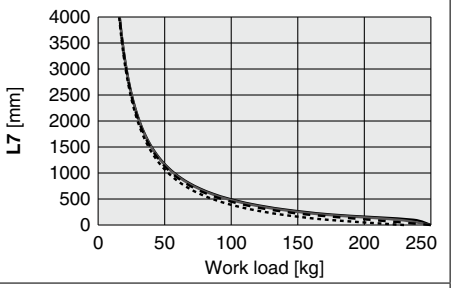
	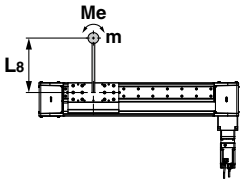	**Y**	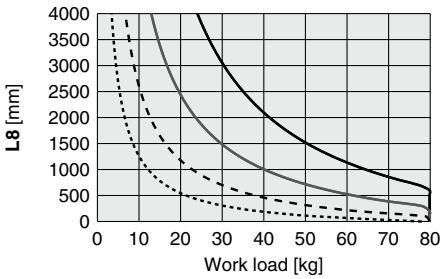	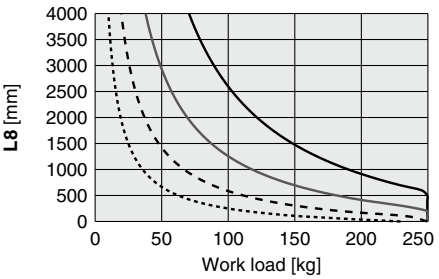
	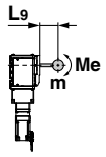	**Z**	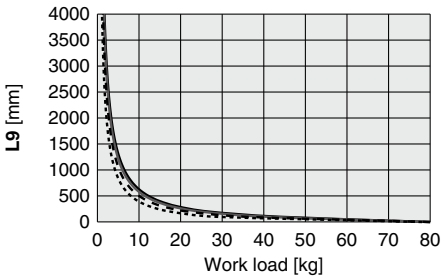	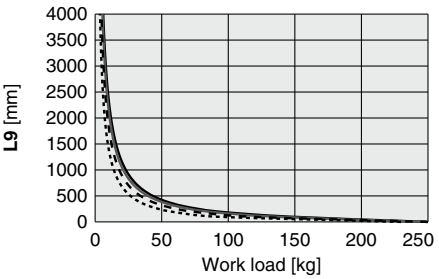
Vertical	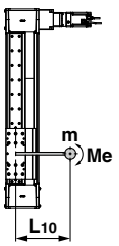	**Y**	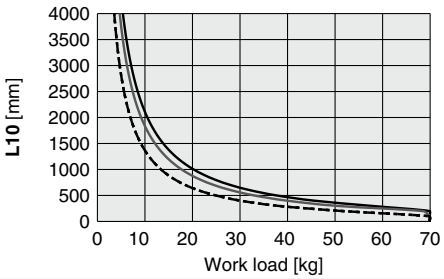	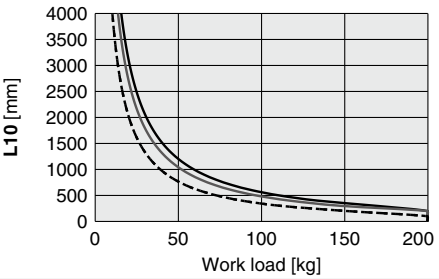
	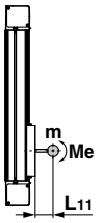	**Z**	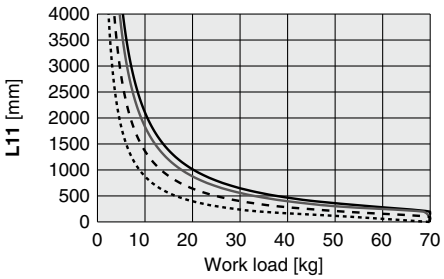	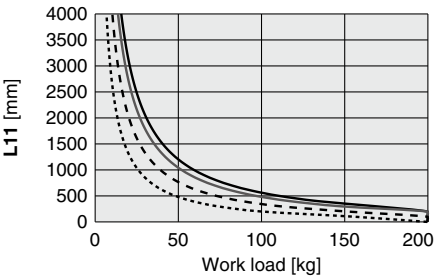

Calculation of Guide Load Factor

1. Decide operating conditions.
   Model: LET-X11
   Size: 80/100
   Mounting orientation: Horizontal/Bottom/Wall/Vertical
   Acceleration [mm/s²]: **a**
   Work load [kg]: **m**
   Work load center position [mm]: **Xc/Yc/Zc**
2. Select the target graph while referencing the model, size, and mounting orientation.
3. Based on the acceleration and work load, find the overhang [mm]: **Lx/Ly/Lz** from the graph.
4. Calculate the load factor for each direction.
   $\alpha x = Xc/Lx$, $\alpha y = Yc/Ly$, $\alpha z = Zc/Lz$
5. Confirm the total of αx, αy, and αz is 1 or less.
   $\alpha x + \alpha y + \alpha z \leq 1$
   When 1 is exceeded, please consider a reduction of acceleration and work load, or a change of the work load center position and series.

Mounting orientation

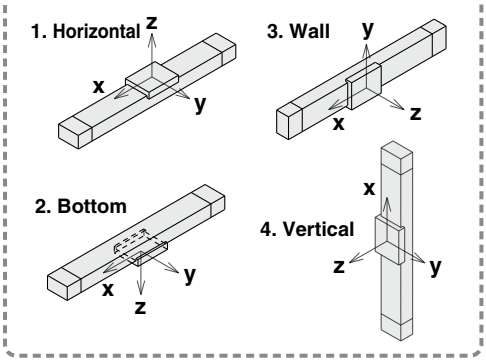

Example

1. Operating conditions
   Model: LET-X11
   Size: 100
   Mounting orientation: Horizontal
   Acceleration [mm/s²]: 5000
   Work load [kg]: 100
   Work load center position [mm]: **Xc = 0**, **Yc = 50**, **Zc = 200**
2. Select the graph on the top right side of page 130.
3. **Lx = 500 mm**, **Ly = 200 mm**, **Lz = 1450 mm**
4. The load factor for each direction can be found as follows.
   $\alpha x = 0/500 = 0$
   $\alpha y = 50/200 = 0.25$
   $\alpha z = 200/1450 = 0.14$
5. $\alpha x + \alpha y + \alpha z = 0.39 \leq 1$

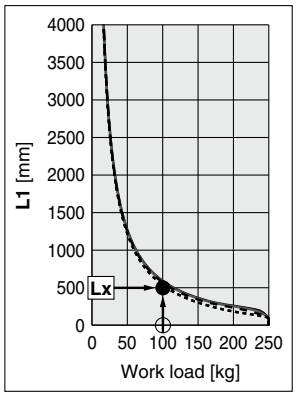

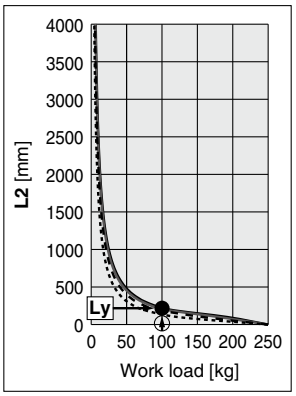

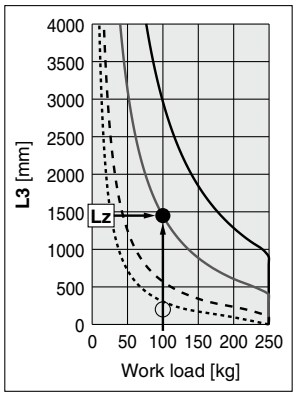

Electric Actuator/Large Slider Type Belt Drive

LET-X11 Series LET80, 100

RoHS

How to Order

Motorless Type LET 100 NN S – 300 – X11

❶ ❷ ❸ ❹

❶ Size

80
100

❷ Motor type∗1

Symbol	Motor type
NN	Without motor flange

∗1 A motor flange is not included with the product.

❸ Lead [mm]

Symbol	LET80	LET100
S	130	240

❹ Stroke [mm]

300 to 3000	300 to 3000

∗ For details, refer to the applicable stroke table below.

Applicable Stroke Table

Size	Stroke [mm]												
	300	400	500	600	700	800	900	1000	1200	1500	2000	2500	3000
80/100	●	●	●	●	●	●	●	●	●	●	●	●	●

∗ Please contact SMC for non-standard strokes as they are produced as special orders.

For auto switches, refer to pages 140 to 143.

Compatible Motors and Mounting Types

Applicable motor model		Size/Mounting type	
Manufacturer	Series	80	100
		NN	
Mitsubishi Electric Corporation	MELSERVO-J4/J5	●	●
YASKAWA Electric Corporation	Σ-V/7/X	●	●
NIDEC SANKYO CORPORATION	S-FLAG	●	●
KEYENCE CORPORATION	SV/SV2	●	●
Delta Electronics, Inc.	ASDA-A2	●	●
SANYO DENKI CO., LTD.	SANMOTION R	●	—
FANUC CORPORATION	β is (-B)	● (β1 only)	—
FUJI ELECTRIC CO., LTD.	ALPHA7	●	—
ANCA Motion	AMD2000	●	—

∗ For some motors, the connector may protrude from the motor body. Be sure to check for interference with the mounting surface before selecting a motor.

Specifications

● Do not use the actuator so that it exceeds these values.

Model			LET80	LET100
Actuator specifications	Stroke [mm]*1		300 to 1000 (Every 100st), 1200, 1500 to 3000 (Every 500st)	300 to 1000 (Every 100st), 1200, 1500 to 3000 (Every 500st)
	Max. work load [kg]	Horizontal	75	240
		Vertical	70	200
	Speed [mm/s]*2		5000	
	Max. acceleration/deceleration [mm/s²]		50000	
	Positioning repeatability [mm]		±0.08	
	Lead [mm]		130	240
	Max. force [N]		800	2500
	Impact/Vibration resistance [m/s²]*3		50/5	
	Actuation type		Belt	
	Guide type		Linear guide	
	Static allowable moment*4 [N·m]	Mp	380	1157
		My	380	1157
		Mr	114	529
	Operating temperature range [°C]		5 to 40	
	Operating humidity range [%RH]		90 or less (No condensation)	
	Enclosure		IP20 (Excludes motor mounting part)	
Other specifications *5	Actuation unit weight [kg]		2.09 + (0.27 x 10^{-3}) x [ST]	6.77 + (0.52 x 10^{-3}) x [ST]
	Other inertia [kg·cm²]		5.76	27.54
	Friction coefficient		0.05	
	Mechanical efficiency		0.8	

*1 Please contact SMC for non-standard strokes as they are produced as special orders.
*2 For details, refer to the "Speed–Work Load Graph (Guide)" on page 126.
*3 Impact resistance: No malfunction occurred when the actuator was tested with a drop tester in both an axial direction and a perpendicular direction to the lead screw. (The test was performed with the actuator in the initial state.)
Vibration resistance: No malfunction occurred in a test ranging between 45 to 2000 Hz. The test was performed in both an axial direction and a perpendicular direction to the lead screw. (The test was performed with the actuator in the initial state.)
*4 The static allowable moment is the amount of static moment which can be applied to the actuator when it is stopped.
If the product is exposed to impact or repeated load, be sure to take adequate safety measures when using the product.
*5 Each value is only to be used as a guide to select a motor.
* Sensor magnet position is located in the table center.
For detailed dimensions, refer to the "Auto Switch Mounting Position" on page 140.
* Do not allow collisions at either end of the table traveling distance.
Also, when performing positioning operation, do not command a range of [LET80: 22 mm, LET100: 25 mm] from both ends.
* For the manufacturing of intermediate strokes, please contact SMC.
(LET80/Manufacturable stroke range: 300 to 3000 mm, LET100/Manufacturable stroke range: 300 to 3000 mm)

Weight

[kg]

Size	Stroke [mm]												
	300	400	500	600	700	800	900	1000	1200	1500	2000	2500	3000
80	14.1	15.8	17.5	19.0	20.7	22.4	23.9	25.6	28.9	33.8	42.0	50.2	58.4
100	36.5	39.3	42.3	45.1	47.9	50.8	53.8	56.6	62.3	70.9	85.3	99.7	114.1

Dimensions

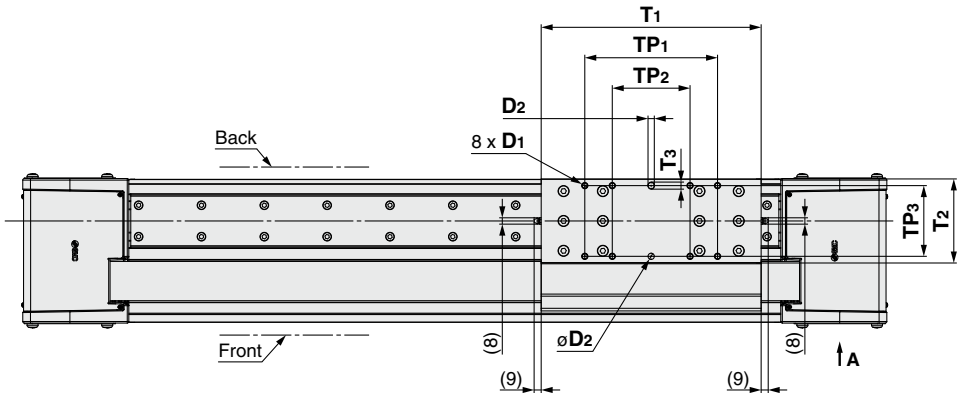

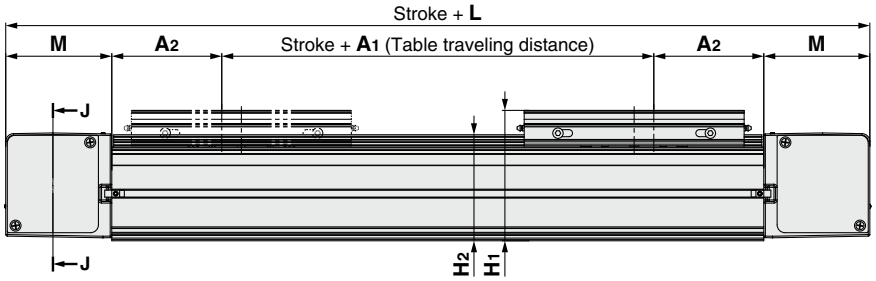

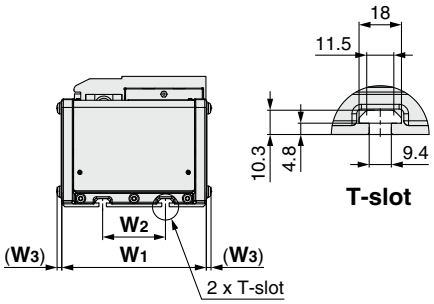

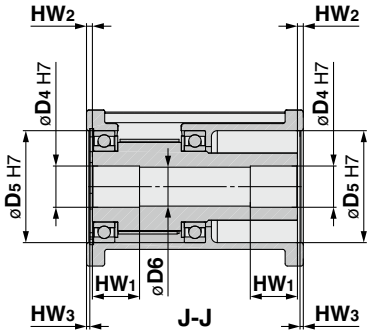

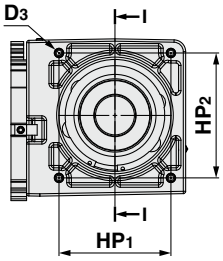

View A
When the side cover is removed

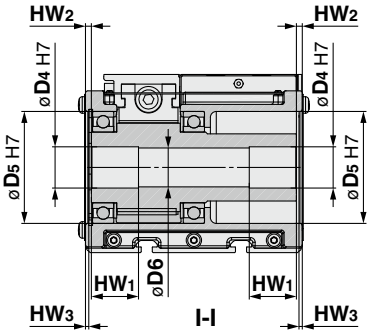

[mm]

Size	L	A1	A2	M	H1	H2	D1	D2	D3	D4	D5	D6	W1
80	440	44	100	98	109.4	86.9	M5 x 0.8 depth 7.5	6 H7 depth 5	M6 x 1.0 depth 9	25	62	23	119
100	600	50	140	135	166	135	M8 x 1.25 depth 12	8 H7 depth 7	M8 x 1.25 depth 12	35	95	33	184

Size	W2	W3	HP1	HP2	HW1	HW2	HW3	TP1	TP2	TP3	T1	T2	T3
80	40	4.7	86	60	35	3	2.4	116	76	55	200	68	7
100	80	6	95	106	40	5	2.8	169	99	90	280	107	9

Motor Mounting

- When mounting a hub, remove all oil content, dust, and dirt adhered to the shaft and the inside of the hub.
- This product does not include the motor and motor mounting screws. (Provided by the customer) Prepare a motor with a round shaft end.
- Take measures to prevent the loosening of the motor mounting screws.

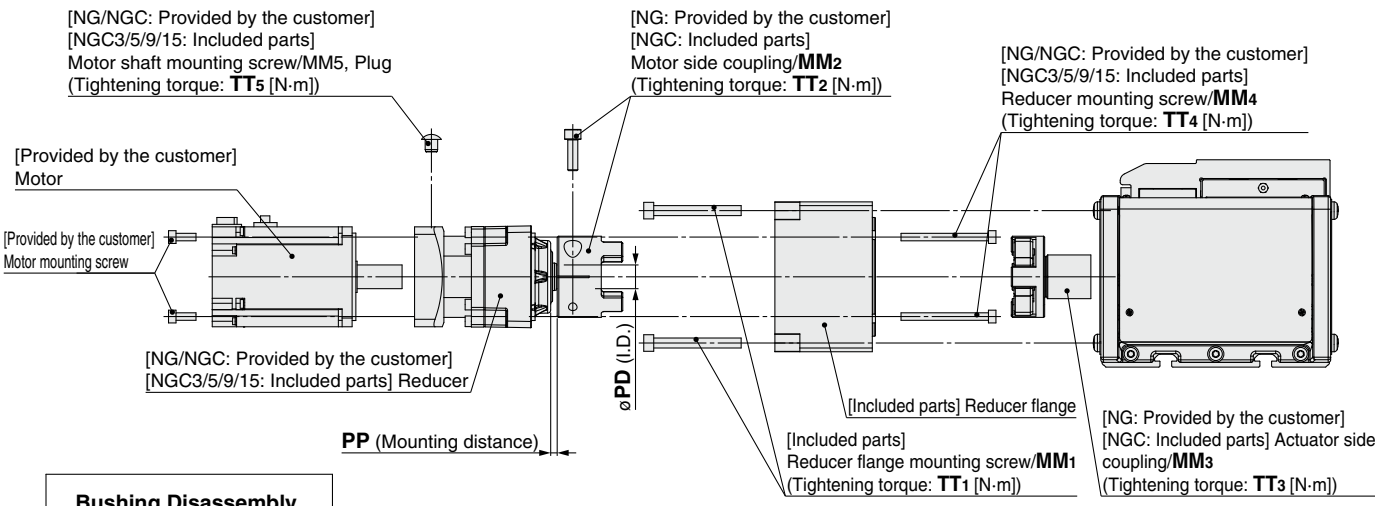

Bushing Disassembly Procedure Diagram

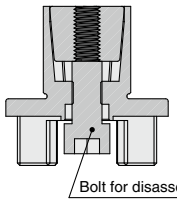

The outer diameter (O.D.) of the coupling to be used must not exceed the corresponding dimensions shown below.

Size	Coupling O.D.
80	ø55 mm or less
100	ø80 mm or less

Mounting procedure

1) After attaching the motor to the reducer using the motor shaft mounting screw, attach a plug.
2) Attach the motor to the reducer using the motor mounting screws (provided by the customer).
3) Attach the motor side coupling to the reducer using the screw included with the coupling.
4) Attach the motor flange to the reducer using the reducer mounting screws.
5) Insert the divided actuator side coupling into the actuator, and tighten it with the bolt supplied with the coupling.*1
6) Attach the reducer flange to the actuator using the reducer flange mounting screws.
(Align the two sides of the coupling so that they fit together.)

*1 Follow the procedures below to loosen the actuator side coupling.
1. Remove the fastening bolt.
2. Insert the bolt for disassembly into the actuator side coupling.
3. Tighten the bolt for disassembly.

Bolt for Disassembly Size

Size	Reduction ratio	Bolt for disassembly size
80	1/3	M8
	1/5, 1/9	M10
100	Common	M12

Size	Flange type	MM_1	TT_1	MM_2	TT_2	MM_3	TT_3	MM_4	TT_4	MM_5	TT_5	PP	PD
LET80	NGA, NGB	M6	5.2	—									
	NGCA			M5	8	M6	10	—					
	NGC3							M5	3	M4	4.3	4.5	12h6
	NGCB			M6	13	M8	20	—					
	NGC5, NGC9							M6	5.2	M5	8.7	5.2	19h7
LET100	NGA, NGB	M8	12.5	—									
	NGCA			M8	30	M10	40	—					
	NGC3, NGC5							M6	5.2	M6	15	5.2	19h7
	NGCB			M8	30	M10	40	—					
	NGC9, NGC15							M8	13	M6	15	10.2	24h7

* The units in the table are as follows: TT□ ±10% [N·m], PP [mm], and PD [mm].

LET-X11 Series
Motor Mounting Parts

How to Order

Flange Assembly **LET − MF 100 − NGA**

❶ ❷

❶ **Size**

80
100

❷ **Flange type**

Size	Symbol	Motor type	(Note)	Reducer flange A	Reducer flange B	Coupling (For flange A)	Coupling (For flange B)	Reducer
LET80	NGA	Mounting type GA	With motor flange	●				
	NGB	Mounting type GB	With motor flange		●			
	NGCA	Mounting type GA + Coupling included	With coupling	●		●		
	NGCB	Mounting type GB + Coupling included	With coupling		●		●	
	NGC3	Mounting type GA + With reducer*1, *2, *3	Reduction ratio 1/3	●		●		●
	NGC5	Mounting type GB + With reducer*1, *2, *3	Reduction ratio 1/5		●		●	●
	NGC9	Mounting type GB + With reducer*1, *2, *3	Reduction ratio 1/9		●		●	●
LET100	NGA	Mounting type GA	With motor flange	●				
	NGB	Mounting type GB	With motor flange		●			
	NGCA	Mounting type GA + Coupling included	With coupling	●		●		
	NGCB	Mounting type GB + Coupling included	With coupling		●		●	
	NGC3	Mounting type GA + With reducer*1, *2, *3	Reduction ratio 1/3	●		●		●
	NGC5	Mounting type GA + With reducer*1, *2, *3	Reduction ratio 1/5	●		●		●
	NGC9	Mounting type GB + With reducer*1, *2, *3	Reduction ratio 1/9		●		●	●
	NGC15	Mounting type GB + With reducer*1, *2, *3	Reduction ratio 1/15		●		●	●

*1 The coupling is the one for the 400 W/750 W specification.
*2 The LET-MF80-NGC15 cannot be selected.
*3 There are 2 types of reducer flange and coupling available according to the shape of the reducer.

Dimensions: Motor Flange Option

Applicable motor

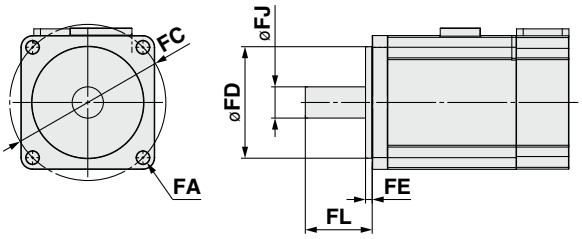

Dimensions [mm]

Size	FA	FC	FD	FE (Max.)	FJ	FL
80	ø5.5	ø70	50	4.6	14	29 to 31
100	ø6.6	ø90	70	4.5	19	40 to 44

Reducer flange

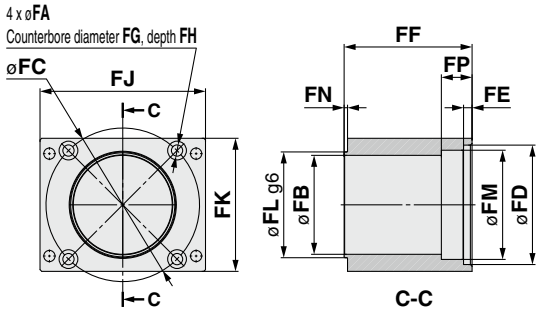

Reducer

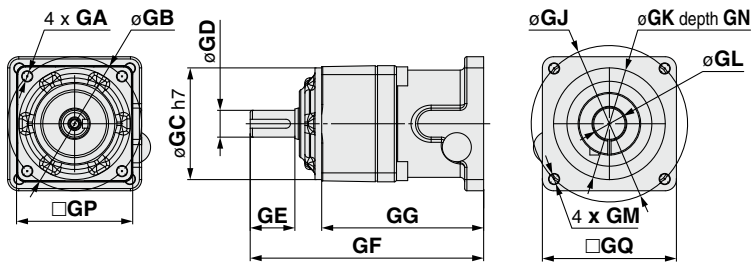

Reducer Flange Dimensions [mm]

Size	Flange type	FA	FB	FC	FD	FE	FF	FG	FH	FJ	FK	FL	FM	FN	FP
80	A	5.5	43	60	$50^{+0.04}_{+0.01}$	5	55	9.5	18	97	78	62	47	2	11
	B	6.6	58	90	$70^{+0.06}_{+0.03}$	5	75	11	22	97	78	62	69	2	18
100	A	6.6	70	90	$70^{+0.06}_{+0.03}$	5	80.5	11	23.5	110	120	95	70	2.5	20
	B	9	70	115	$90^{+0.06}_{+0.03}$	5	86	14	25.5	110	120	95	90	2.5	20

Reducer Dimensions [mm]

Size	Reduction ratio	GA	GB	GC	GD	GE	GF	GG	GJ	GK	GL	GM	GN	GP	GQ
80	1/3	M5 x 12	60	50	12h7	20	104.5	72.5	70	50	14	M5 x 8.5	4	52	60
	1/5	M6 x 20	90	70	19h7	30	139.5	89.5	70	50	14	M5 x 10	4	81	60
	1/9	M6 x 20	90	70	19h7	30	139.5	89.5	70	50	14	M5 x 10	4	81	60
100	1/3, 1/5	M6 x 20	90	70	19h7	30	143.5	93.5	90	70	19	M6 x 10	7.5	81	80
	1/9	M8 x 20	115	90	24h7	40	158.5	97.5	90	70	19	M6 x 10	7.5	101	80
	1/15	M8 x 20	115	90	24h7	40	171	110	90	70	19	M6 x 10	7.5	101	80

Coupling

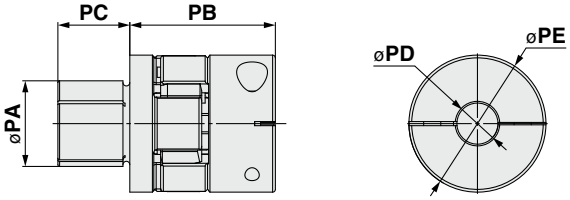

Dimensions [mm]

Size	Reduction ratio	PA	PB	PC	PD	PE
80	1/3	25	42.5	21	12	40
	1/5, 1/9	25	55.3	31	19	55
100	1/3, 1/5	35	62.3	37	19	65
	1/9, 1/15	35	62.3	37	24	65

Side Supports

MY-S50A

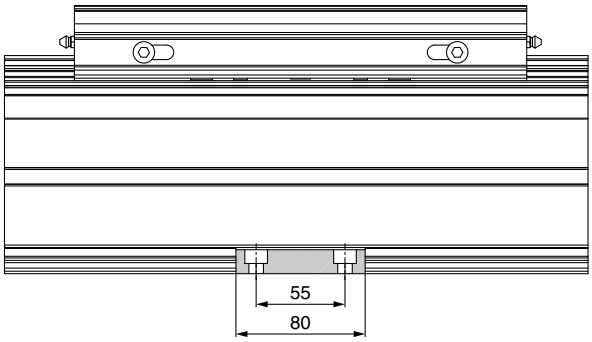

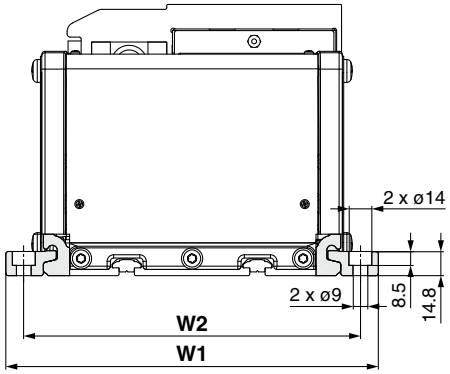

Side Support Intervals [mm]

Size	W1	W2
80	162	140
100	228	206

∗ The side supports consist of a set of right and left brackets.

Usage Guide for Side Supports

When mounting with the side supports, be sure to use the number of side supports (N) and the support spacing (L1) shown in the figure and table below as a guide.

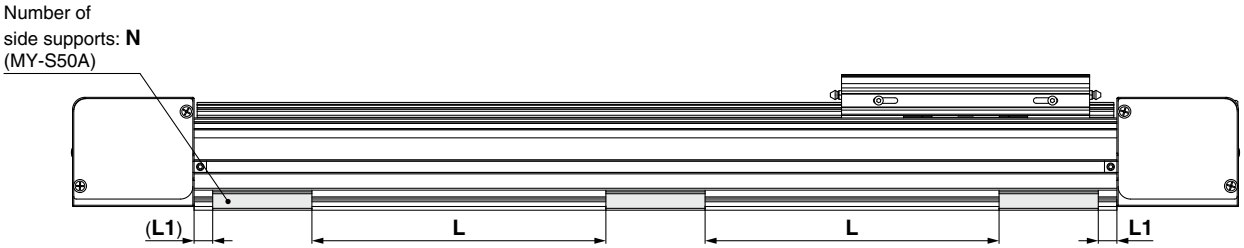

∗ Number of side supports: N is the combined number of left and right supports.

Stroke	Screw size	Max. tightening torque [N·mm]	L1 [mm]	Number of side supports: N [pcs.]	
				80	100
Up to 600	M8 x 1.25	12.5	15	6	8
Up to 900				8	10
Up to 1200				10	12
Up to 2000				12	14
Up to 3000				14	16

∗ Secure the side supports using the support spacing (L) in the table above.

Electric Actuator Mounting T-nuts

The T-nuts are used for mounting using the T-slots of the actuator.
When mounting with T-nuts only, mount the product while referring to ⑨ (Mount using more than the number of T-nuts used to secure the body.) in the "Handling" section of the Specific Product Precautions.

T-nut (12 pcs.) **LET – T 80 – 08**

❶ ❷

❶ Size

80

∗ The T-nuts are the same size for the LET80 and 100.

❷ Thread size

Symbol	Thread
08	M8

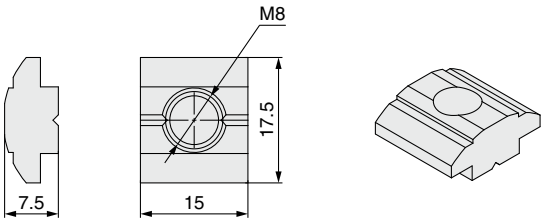

Auto Switch Mounting

Auto Switch Mounting Position

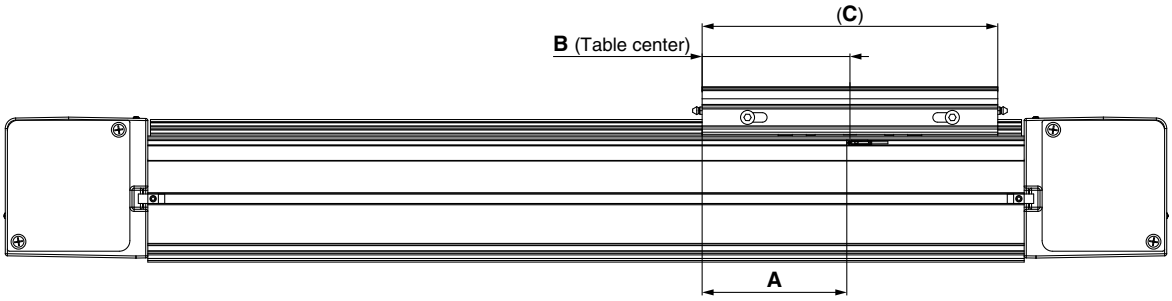

[mm]

Model	Size	A	B	C	Operating range
LET80	80	97	100	200	6
LET100	100	137	140	280	7

∗ The operating range is a guideline including hysteresis, not meant to be guaranteed. There may be large variations (as much as ±30%) depending on the ambient environment.

Auto Switch Mounting (Size: 80, 100)

When mounting an auto switch, first, hold a switch spacer between your fingers and press it into the slot. When doing this, confirm that it is set in the correct mounting orientation, or reinsert it if necessary. Next, insert the auto switch into the slot and slide it until it is positioned under the switch spacer.
After confirming the mounting position, use a flat head watchmaker's screwdriver to tighten the included auto switch mounting screw.

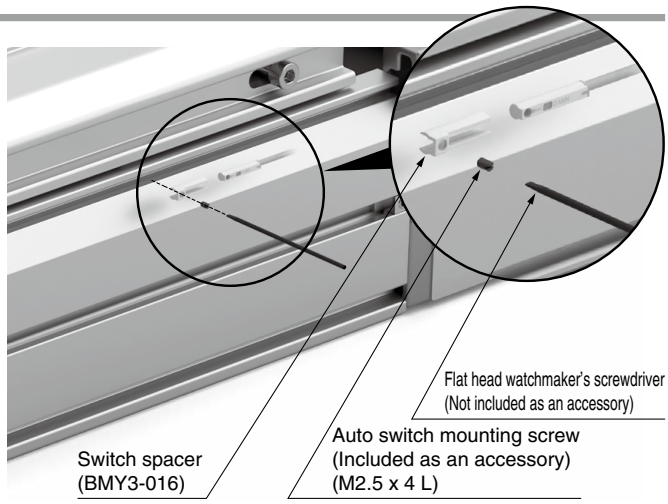

Auto Switch Mounting Screw Tightening Torque [N·m]

Auto switch model	Tightening torque
D-M9□(V) **D-M9□W(V)**	0.10 to 0.15

Solid State Auto Switch Direct Mounting Type
D-M9N(V)/D-M9P(V)/D-M9B(V)

Refer to the SMC website for details on products that are compliant with international standards.

Grommet

- **2-wire load current is reduced (2.5 to 40 mA).**
- **Using flexible cable as standard spec.**

⚠Caution

Precautions

Fix the auto switch with the existing screw installed on the auto switch body. The auto switch may be damaged if a screw other than the one supplied is used.

Auto Switch Specifications

PLC: Programmable Logic Controller

D-M9□, D-M9□V (With indicator light)						
Auto switch model	D-M9N	D-M9NV	D-M9P	D-M9PV	D-M9B	D-M9BV
Electrical entry direction	In-line	Perpendicular	In-line	Perpendicular	In-line	Perpendicular
Wiring type	3-wire				2-wire	
Output type	NPN		PNP		—	
Applicable load	IC circuit, Relay, PLC				24 VDC relay, PLC	
Power supply voltage	5, 12, 24 VDC (4.5 to 28 V)				—	
Current consumption	10 mA or less				—	
Load voltage	28 VDC or less		—		24 VDC (10 to 28 VDC)	
Load current	40 mA or less				2.5 to 40 mA	
Internal voltage drop	0.8 V or less at 10 mA (2 V or less at 40 mA)				4 V or less	
Leakage current	100 μA or less at 24 VDC				0.8 mA or less	
Indicator light	Red LED illuminates when turned ON.					
Standards	CE/UKCA marking					

Oilproof Flexible Heavy-duty Lead Wire Specifications

Auto switch model		D-M9N(V)	D-M9P(V)	D-M9B(V)
Sheath	Outside diameter [mm]	ø2.6		
Insulator	Number of cores	3 cores (Brown/Blue/Black)		2 cores (Brown/Blue)
	Outside diameter [mm]	ø0.88		
Conductor	Effective area [mm²]	0.15		
	Strand diameter [mm]	ø0.05		
Min. bending radius [mm] (Reference values)		17		

∗ Refer to the **Web Catalog** for solid state auto switch common specifications.
∗ Refer to the **Web Catalog** for lead wire lengths.

Weight

[g]

Auto switch model		D-M9N(V)	D-M9P(V)	D-M9B(V)
Lead wire length	0.5 m (**Nil**)	8		7
	1 m (**M**)	14		13
	3 m (**L**)	41		38
	5 m (**Z**)	68		63

Dimensions

[mm]

D-M9□

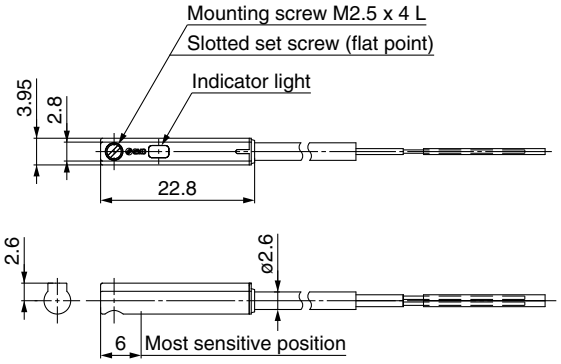

D-M9□V

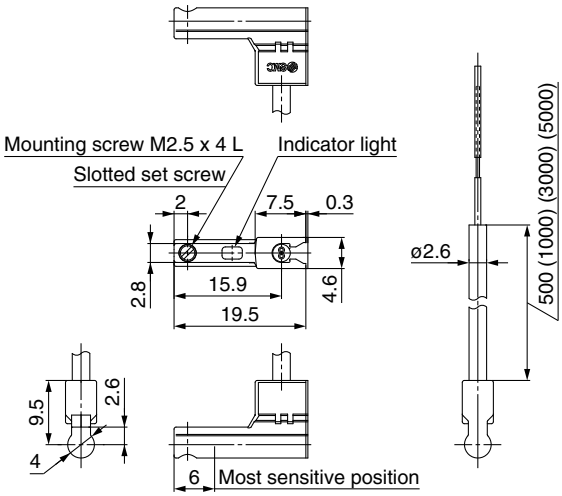

Normally Closed Solid State Auto Switch Direct Mounting Type
D-M9NE(V)/D-M9PE(V)/D-M9BE(V)

Refer to the SMC website for details on products that are compliant with international standards.

Grommet

- **Output signal turns on when no magnetic force is detected.**
- **Can be used for the actuator adopted by the solid state auto switch D-M9 series (excluding special order products)**

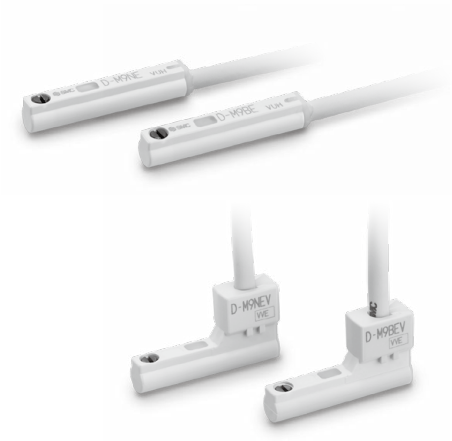

⚠Caution

Precautions

Fix the auto switch with the existing screw installed on the auto switch body. The auto switch may be damaged if a screw other than the one supplied is used.

Auto Switch Specifications

PLC: Programmable Logic Controller

D-M9□E, D-M9□EV (With indicator light)						
Auto switch model	D-M9NE	D-M9NEV	D-M9PE	D-M9PEV	D-M9BE	D-M9BEV
Electrical entry direction	In-line	Perpendicular	In-line	Perpendicular	In-line	Perpendicular
Wiring type	3-wire				2-wire	
Output type	NPN		PNP		—	
Applicable load	IC circuit, Relay, PLC				24 VDC relay, PLC	
Power supply voltage	5, 12, 24 VDC (4.5 to 28 V)				—	
Current consumption	10 mA or less				—	
Load voltage	28 VDC or less		—		24 VDC (10 to 28 VDC)	
Load current	40 mA or less				2.5 to 40 mA	
Internal voltage drop	0.8 V or less at 10 mA (2 V or less at 40 mA)				4 V or less	
Leakage current	100 μA or less at 24 VDC				0.8 mA or less	
Indicator light	Red LED illuminates when turned ON.					
Standards	CE/UKCA marking					

Oilproof Flexible Heavy-duty Lead Wire Specifications

Auto switch model		D-M9NE(V)	D-M9PE(V)	D-M9BE(V)
Sheath	Outside diameter [mm]	ø2.6		
Insulator	Number of cores	3 cores (Brown/Blue/Black)		2 cores (Brown/Blue)
	Outside diameter [mm]	ø0.88		
Conductor	Effective area [mm²]	0.15		
	Strand diameter [mm]	ø0.05		
Min. bending radius [mm] (Reference values)		17		

∗ Refer to the **Web Catalog** for solid state auto switch common specifications.
∗ Refer to the **Web Catalog** for lead wire lengths.

Weight

[g]

Auto switch model		D-M9NE(V)	D-M9PE(V)	D-M9BE(V)
Lead wire length	0.5 m (**Nil**)	8		7
	1 m (**M**)∗1	14		13
	3 m (**L**)	41		38
	5 m (**Z**)∗1	68		63

∗1 The 1 m and 5 m options are produced upon receipt of order.

Dimensions

[mm]

D-M9□E

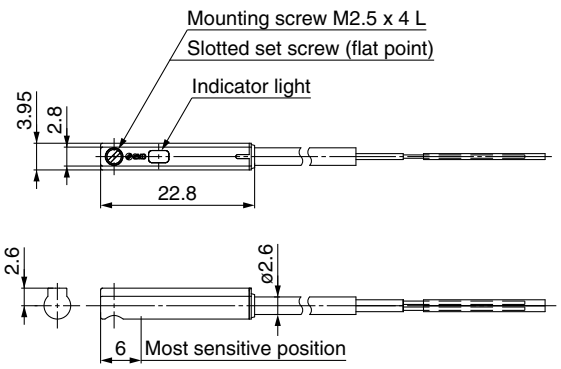

D-M9□EV

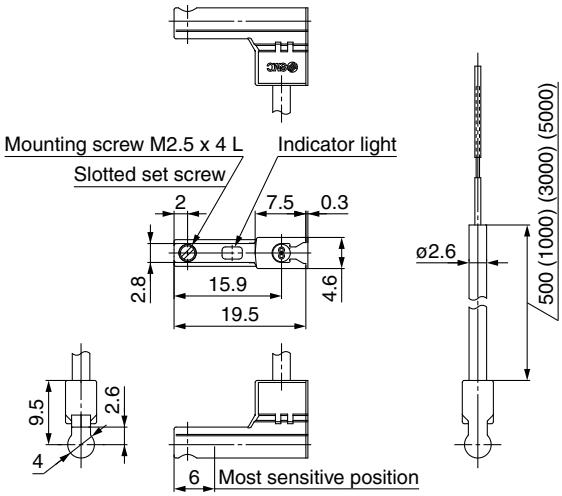

2-Color Indicator Solid State Auto Switch Direct Mounting Type
D-M9NW(V)/D-M9PW(V)/D-M9BW(V)

Refer to the SMC website for details on products that are compliant with international standards.

Grommet

- **2-wire load current is reduced (2.5 to 40 mA).**
- **Using flexible cable as standard spec.**
- **The proper operating range can be determined by the color of the light. (Red → Green ← Red)**

⚠Caution

Precautions

Fix the auto switch with the existing screw installed on the auto switch body. The auto switch may be damaged if a screw other than the one supplied is used.

Auto Switch Specifications

PLC: Programmable Logic Controller

D-M9□W, D-M9□WV (With indicator light)						
Auto switch model	D-M9NW	D-M9NWV	D-M9PW	D-M9PWV	D-M9BW	D-M9BWV
Electrical entry direction	In-line	Perpendicular	In-line	Perpendicular	In-line	Perpendicular
Wiring type	3-wire				2-wire	
Output type	NPN		PNP		—	
Applicable load	IC circuit, Relay, PLC				24 VDC relay, PLC	
Power supply voltage	5, 12, 24 VDC (4.5 to 28 V)				—	
Current consumption	10 mA or less				—	
Load voltage	28 VDC or less		—		24 VDC (10 to 28 VDC)	
Load current	40 mA or less				2.5 to 40 mA	
Internal voltage drop	0.8 V or less at 10 mA (2 V or less at 40 mA)				4 V or less	
Leakage current	100 μA or less at 24 VDC				0.8 mA or less	
Indicator light	Operating range ····· Red LED illuminates. Proper operating range ····· Green LED illuminates.					
Standards	CE/UKCA marking					

Oilproof Flexible Heavy-duty Lead Wire Specifications

Auto switch model		D-M9NW(V)	D-M9PW(V)	D-M9BW(V)
Sheath	Outside diameter [mm]	ø2.6		
Insulator	Number of cores	3 cores (Brown/Blue/Black)		2 cores (Brown/Blue)
	Outside diameter [mm]	ø0.88		
Conductor	Effective area [mm²]	0.15		
	Strand diameter [mm]	ø0.05		
Min. bending radius [mm] (Reference values)		17		

∗ Refer to the **Web Catalog** for solid state auto switch common specifications.
∗ Refer to the **Web Catalog** for lead wire lengths.

Weight

[g]

Auto switch model		D-M9NW(V)	D-M9PW(V)	D-M9BW(V)
Lead wire length	0.5 m (**Nil**)	8		7
	1 m (**M**)	14		13
	3 m (**L**)	41		38
	5 m (**Z**)	68		63

Dimensions

[mm]

D-M9□W

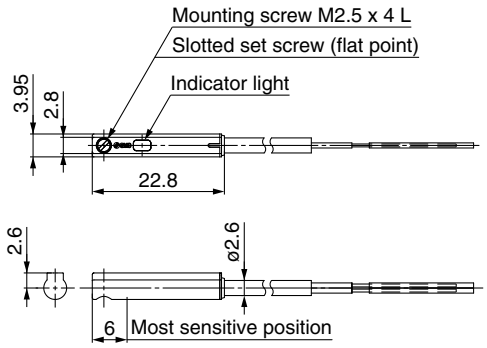

D-M9□WV

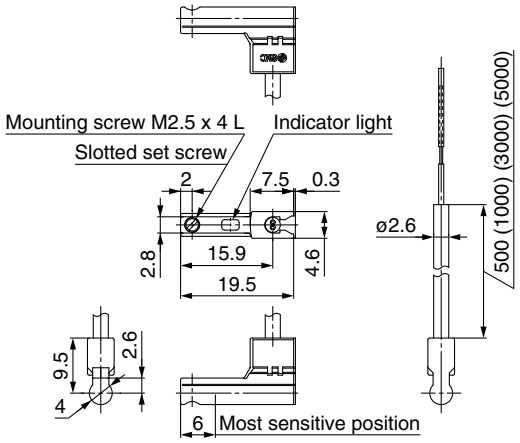

LET-X11 Series
Specific Product Precautions 1

Be sure to read this before handling the products. Refer to the back cover for safety instructions. For electric actuator and auto switch precautions, refer to the "Handling Precautions for SMC Products" and the "Operation Manual" on the SMC website: https://www.smcworld.com

Design

⚠Warning

1. When mounting it vertically, at an angle, or in other situations where there is a height difference, install safety measures from the outside. (Latches, movable bolts, fall prevention devices, etc.)

- Design the structure so that the human body does not come into direct contact with the driven object or moving parts of the actuator. Install a protective cover to prevent direct contact with the human body, or if there is a risk of contact, install a sensor or the like to ensure a safe structure such as an emergency stop before contact is made.
- Even after the actuator has stopped, do not approach the movable range until it is sufficiently safe.
- The load may fall due to a power outage or a broken belt, which may cause serious damage to the human body or the machine.
- Be sure to select a motor with brake.
- Implement safety measures externally to prevent damage from falling due to broken belt.
  (Latches, movable bolts, fall prevention devices, etc.)

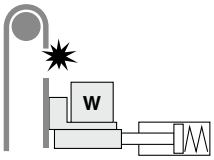

⚠Caution

1. Do not apply a load in excess of the specification limits.

Select a suitable actuator by work load and allowable moment. If a load in excess of the specification limits is applied to the guide, adverse effects such as the generation of play in the guide, reduced accuracy, or reduced service life of the product may occur.

2. Do not use the product in applications where excessive external force or impact force is applied to it.

The product can be damaged. The components, including the motor, are manufactured to precise tolerances. Even a slight deformation may cause a malfunction or seizure.

Selection

⚠Warning

1. Do not increase the speed in excess of the specification limits.

Select a suitable actuator by the relationship between the allowable work load and speed, and the allowable speed of each stroke. If the product is used outside of the specification limits, adverse effects such as the generation of noise, reduced accuracy, or reduced service life of the product may occur.

2. When the product repeatedly cycles with partial strokes (100 mm or less), lubrication can run out. Operate it at a full stroke at least once a day or every a thousand cycles.

3. When external force is to be applied to the table, it is necessary to add the external force to the work load as the total carried load when selecting a size.

When a cable duct or flexible moving tube is attached to the actuator, the sliding resistance of the table will increase, which may lead to the malfunction of the product.

4. Use the acceleration/deceleration within the range that does not exceed the specification limit.

This can cause malfunctions such as tooth skipping of the belt.

5. Do not operate the motor in a state where the torque exceeds 100% of the rated value without reaching the set speed.

This can cause malfunctions such as tooth skipping of the belt.

Selection

⚠Warning

6. If the actuator is to be installed in a position other than horizontal installation, use an actuator with a lock.

If you use an actuator without a lock, there is no holding force when the power or servo is turned off, so the workpiece may drop.

Handling

⚠Warning

1. Do not allow the table (slider) to hit the end of stroke.

If an incorrect input instruction is given, such as using it outside the specification range or changing the driver setting/origin position to give an operation instruction outside the actual stroke, the table (slider) can conflict. Perform a trial run to confirm that the table does not hit the end of stroke.
If the table collides with the stroke end, the guide, belt, housing, etc., will be damaged and will not operate normally.
Also, take measures against drops since the workpiece will drop freely due to its own weight when it is vertical.

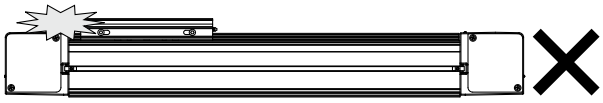

⚠Caution

1. The actual speed of this actuator is affected by the work load and stroke.

Check the model selection section of the catalog.

2. Do not apply a load, impact, or resistance in addition to the transferred load during return to origin.

3. Do not dent, scratch, or cause other damage to the body or table mounting surfaces.

Doing so may cause unevenness in the mounting surface, play in the guide, or an increase in the sliding resistance.

4. Do not apply strong impact or an excessive moment while mounting the product or a workpiece.

If an external force over the allowable moment is applied, it may cause play in the guide or an increase in the sliding resistance.

5. Keep the flatness of the mounting surface within 0.1 mm/500 mm.

If a workpiece or base does not sit evenly on the body of the product, play in the guide or an increase in the sliding resistance may occur.
In the case of overhang mounting (including cantilever), use a support plate, etc., to avoid deflection of the actuator body.

6. When installing this product, fix it with more side supports and T-nuts than the number of installations.

Reducing the number of mounting units will affect performance, such as increasing the displacement of the table.

7. Do not allow a workpiece to collide with the table during the positioning operation or within the positioning range.

Particularly during the transportation

LET-X11 Series
Specific Product Precautions 2

Be sure to read this before handling the products. Refer to the back cover for safety instructions. For electric actuator and auto switch precautions, refer to the "Handling Precautions for SMC Products" and the "Operation Manual" on the SMC website: https://www.smcworld.com

Handling

⚠Caution

8. When mounting the actuator, use bolts with adequate size and tighten them with adequate torque.

Tightening the screws with a higher torque than the maximum may cause malfunction, whilst tightening with a lower torque can cause the displacement of the mounting position or fall.

Side support mounting

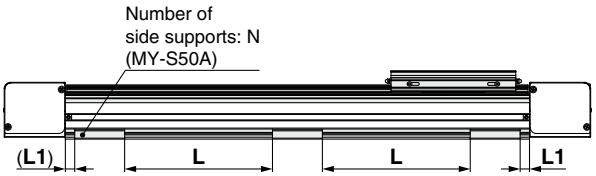

∗ Number of side supports: N is the combined number of left and right supports.

Stroke	Bolt size	Max. tightening torque [N·m]	L1 [mm]	Mounting quantity 80	Mounting quantity 100
Up to 600	M8 x 1.25	12.5 ±10%	15	6	8
Up to 900				8	10
Up to 1200				10	12
Up to 2000				12	14
Up to 3000				14	16

∗ Fix the support interval (L) of the side support at equal intervals.
∗ Please use MY-S50A for the side support used for installation.

Workpiece mounting

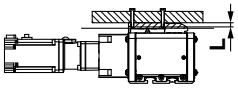

Size	Bolt size	Max. tightening torque [N·mm]	L (Max. screw-in depth) [mm]
80	M5 x 0.8	3	9
100	M8 x 1.25	12.5	15

9. Do not operate by fixing the table and moving the actuator body.

10. Vibration may occur during operation, this could be caused by the operating conditions.
If it occurs, adjust response value of auto tuning of driver to be lower.
During the first auto tuning noise may occur, the noise will stop when the tuning is complete.

11. When the fluctuations in the load are caused during operation, malfunction, noise, or alarm generation may occur. (In the case of the AC servo motor)

The gain tuning may not be suitable for fluctuating loads. Adjust the gain properly by following the instructions in the driver manual.

12. When lifting the product, be careful not to overturn or drop it.

Doing so may damage the product.

13. Depending on the acceleration and stroke, this actuator may make noise when the belt comes into contact with the pulley flange.

Perform one of the following.

a. Decrease acceleration.
b. Apply grease to the inner surface of the pulley flange (belt contact surface).

Applied portion

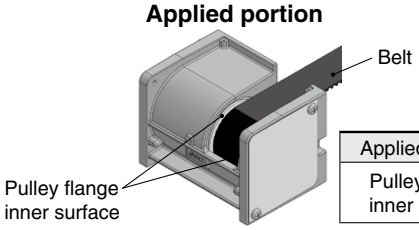

Applied portion	Order no.
Pulley flange inner surface	GR-S-010 (10 g)

Maintenance

⚠Warning

Maintenance frequency

Perform maintenance according to the table below.

Frequency	Appearance check	Internal check	Belt check
Inspection before daily operation	○	—	—
Inspection every 6 months/1000 km/ 5 million cycles∗1	○	○	○

∗1 Select whichever comes first.

- **Items for visual appearance check**
  1. Loose set screws, Abnormal amount of dirt, etc.
  2. Check for visible damage, Check of cable joint
  3. Vibration, Noise
- **Items for internal check**
  1. Lubricant condition on moving parts
     ∗ For lubrication, use lithium grease No. 2.
  2. Loose or mechanical play in fixed parts or fixing screws
- **Items for belt check**

Stop operation immediately and replace the belt when any of the following occur. In addition, ensure your operating environment and conditions satisfy the requirements specified for the product.

a. Facing cloth wear
The facing cloth fibers have become fuzzy, the rubber quality has gone down, and the texture of the facing cloth has become unclear.

b. Peeling off or wearing of the side of the belt
Belt corner has become rounded and frayed threads stick out

c. Belt partially cut
Belt is partially cut, Foreign matter caught in the teeth of other parts is causing damage

d. A vertical line on belt teeth is visible
Damage which is made when the belt runs on the flange

e. Rubber back of the belt is softened and sticky

f . Cracks on the back of the belt are visible

Rod Type *LEY Series*

p. 147

Guide Rod Type *LEYG Series*

p. 169

Model Selection

Size 25, 32, 63, 100

LEY Series ▶p. 153

Selection Procedure

Positioning Control Selection Procedure

Step 1 Check the work load–speed. (Vertical transfer) → **Step 2** Check the cycle time.

Selection Example

The model selection method shown below corresponds to SMC's standard motor.
For use in combination with a motor from a different manufacturer, check the available product information of the motor to be used.

Operating conditions

- Work load: 16 [kg]
- Speed: 300 [mm/s]
- Acceleration/Deceleration: 5000 [mm/s²]
- Stroke: 300 [mm]
- Workpiece mounting condition: Vertical upward downward transfer

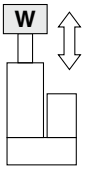

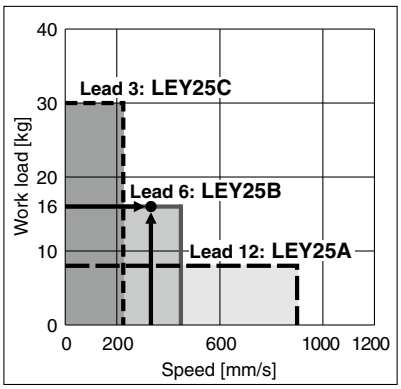

<Speed–Vertical Work Load Graph> (LEY25)

Step 1 **Check the work load–speed. <Speed–Vertical Work Load Graph>**

Select a model based on the workpiece mass and speed which are within the range of the actuator body specifications while referencing the speed–vertical work load graph on page 149.

Selection example) The **LEY25B** can be temporarily selected as a possible candidate based on the graph shown on the right side.

∗ It is necessary to mount a guide outside the actuator when used for horizontal transfer. When selecting the target model, refer to horizontal work load in the specifications on pages 154 and 155 and, the precautions.

∗ Refer to the selection method of motor manufacturers for regeneration resistance.

Step 2 **Check the cycle time.**

Calculate **the cycle time** using the following calculation method.

Cycle time:

T can be found from the following equation.

$$T = T1 + T2 + T3 + T4 \text{ [s]}$$

- T1: Acceleration time and T3: Deceleration time can be found by the following equation.

$$T1 = V/a1 \text{ [s]} \qquad T3 = V/a2 \text{ [s]}$$

- T2: Constant speed time can be found from the following equation.

$$T2 = \frac{L - 0.5 \cdot V \cdot (T1 + T3)}{V} \text{ [s]}$$

- T4: Settling time varies depending on the motor type and load. The value below is recommended.

$$T4 = 0.05 \text{ [s]}$$

∗ The conditions for the settling time vary depending on the motor or driver to be used.

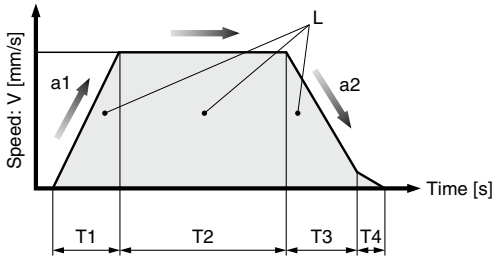

L : Stroke [mm] ····· (Operating condition)
V : Speed [mm/s] ····· (Operating condition)
a1: Acceleration [mm/s²] ··· (Operating condition)
a2: Deceleration [mm/s²] ··· (Operating condition)

T1: Acceleration time [s] ··· Time until reaching the set speed
T2: Constant speed time [s] ··· Time while the actuator is operating at a constant speed
T3: Deceleration time [s] ··· Time from the beginning of the constant speed operation to stop
T4: Settling time [s] ··· Time until positioning is completed

Calculation example)
T1 to T4 can be calculated as follows.

$$T1 = V/a1 = 300/5000 = 0.06 \text{ [s]}, \quad T3 = V/a2 = 300/5000 = 0.06 \text{ [s]}$$

$$T2 = \frac{L - 0.5 \cdot V \cdot (T1 + T3)}{V} = \frac{300 - 0.5 \cdot 300 \cdot (0.06 + 0.06)}{300} = 0.94 \text{ [s]}$$

$$T4 = 0.05 \text{ [s]}$$

The cycle time can be found as follows.
T = T1 + T2 + T3 + T4 = 0.06 + 0.94 + 0.06 + 0.05 = **1.11 [s]**

Based on the above calculation result, the LEY25B-300 should be selected.

Selection Procedure

Pushing Control Selection Procedure

Step 1 Check the force. → **Step 2** Check the lateral load on the rod end.

Selection Example

The model selection method shown below corresponds to SMC's standard motor.
For use in combination with a motor from a different manufacturer, check the available product information of the motor to be used.

Operating conditions

- Mounting condition: Horizontal (pushing)
- Speed: 100 [mm/s]
- Attachment weight: 0.5 [kg]
- Stroke: 300 [mm]
- Force: 255 [N]

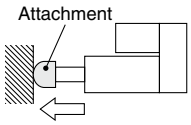

Step 1 **Check the force.**
<Force Conversion Graph>

Select a model based on the ratio to rated torque and force while referencing the force conversion graph.

Selection example)
Based on the graph shown on the right side,
- Ratio to rated torque: 90 [%]
- Force: 255 [N]

The **LEY25B** can be temporarily selected as a possible candidate.

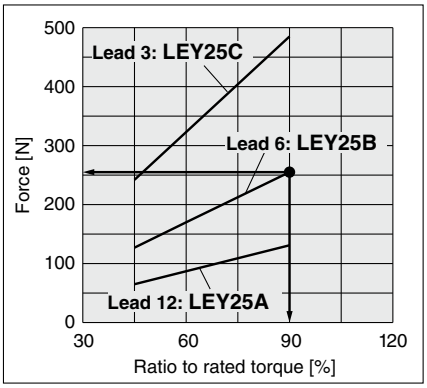

<Force Conversion Graph>
(LEY25)

Step 2 **Check the lateral load on the rod end.**
<Graph of Allowable Lateral Load on the Rod End>

Confirm the allowable lateral load on the rod end of the actuator: LEY25B, which has been selected temporarily while referencing the graph of allowable lateral load on the rod end.

Selection example)
Based on the graph shown on the right side,
- Attachment weight: 0.5 [kg] ≈ 5 [N]
- Product stroke: 300 [mm]

The lateral load on the rod end is within the allowable range.

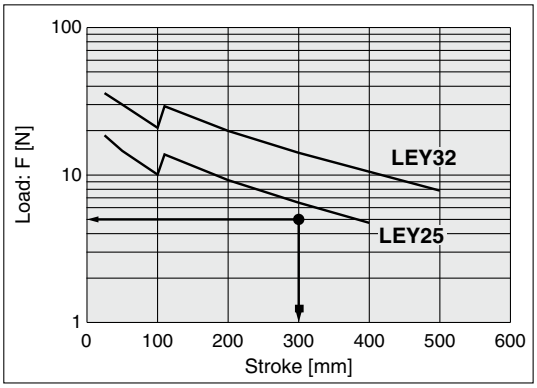

<Graph of Allowable Lateral Load on the Rod End>

Based on the above calculation result, the LEY25B-300 should be selected.

Speed–Vertical Work Load Graph

∗ The values shown below are allowable values of the actuator body. Do not use the actuator so that it exceeds these specification ranges.
∗ The allowable speed is restricted depending on the stroke. Select it by referring to the "Allowable Stroke Speed."

LEY25□ (Motor mounting position: Parallel/In-line)

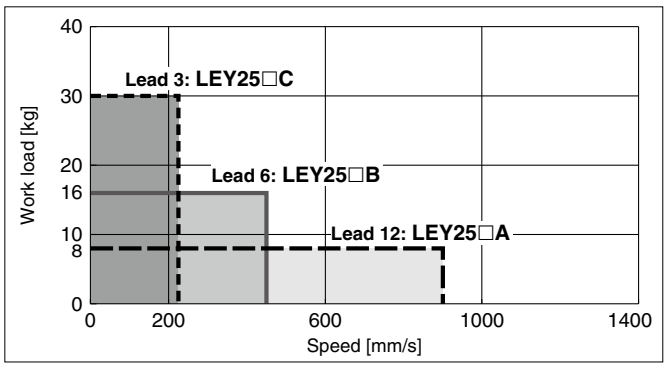

LEY32□ (Motor mounting position: Parallel)

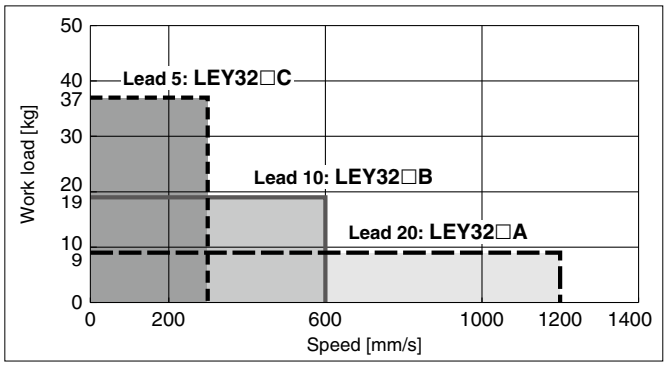

LEY32D (Motor mounting position: In-line)

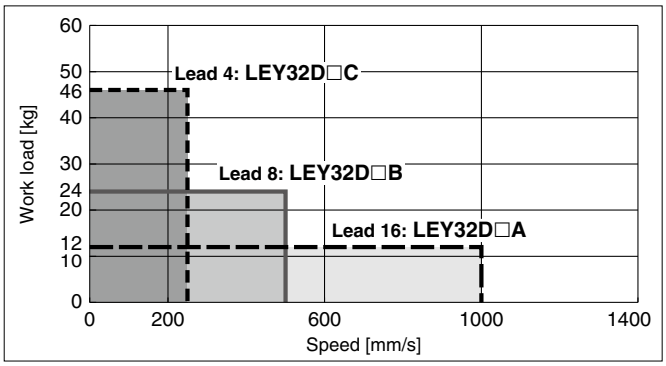

LEY63□ (Motor mounting position: Parallel/In-line)

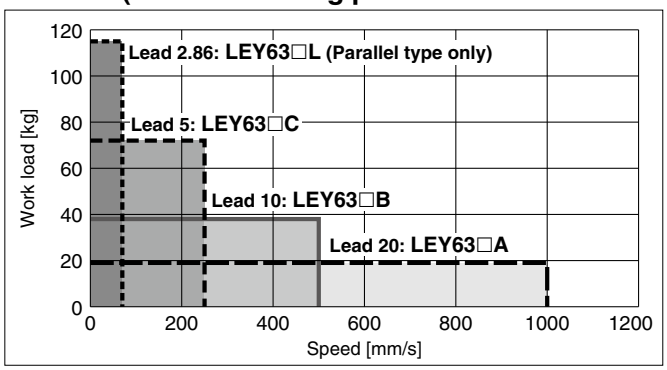

LEY100□ (Motor mounting position: Parallel/In-line)

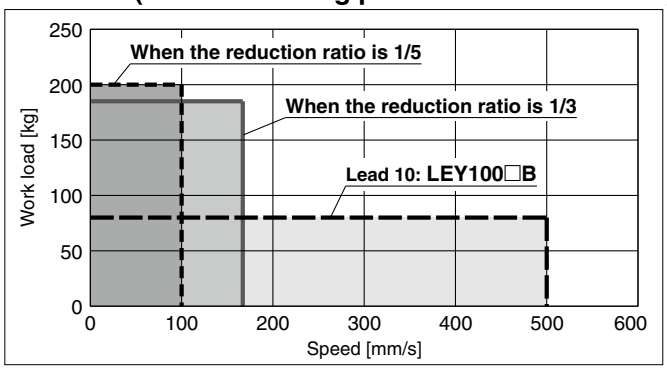

∗ Each value is the value when a reducer is built into the product.

∗ The values shown below are allowable values of the actuator body. Do not use the actuator so that it exceeds these specification ranges.
∗ The allowable speed is restricted depending on the stroke. Select it by referring to the "Allowable Stroke Speed."

Speed–Horizontal Work Load Graph

LEY25□ (Motor mounting position: Parallel/In-line)

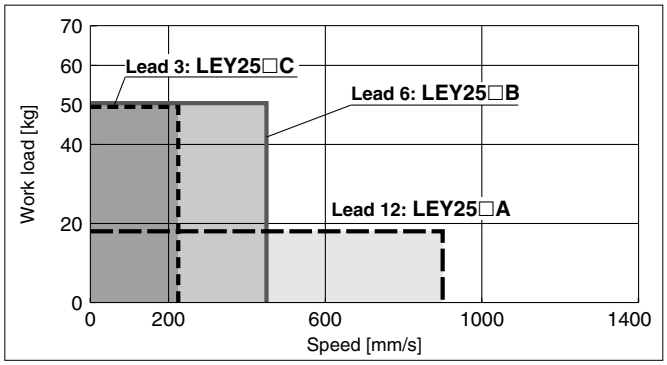

LEY32□ (Motor mounting position: Parallel)

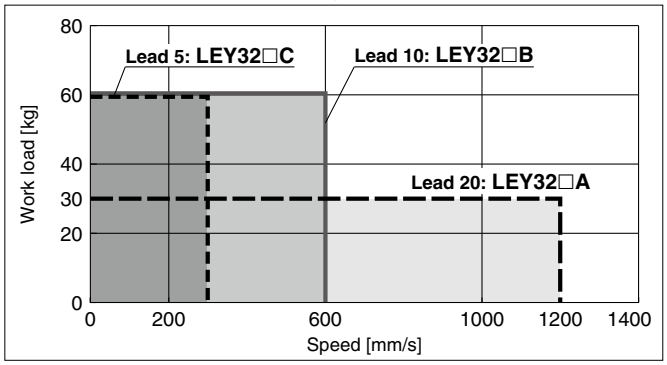

LEY32D (Motor mounting position: In-line)

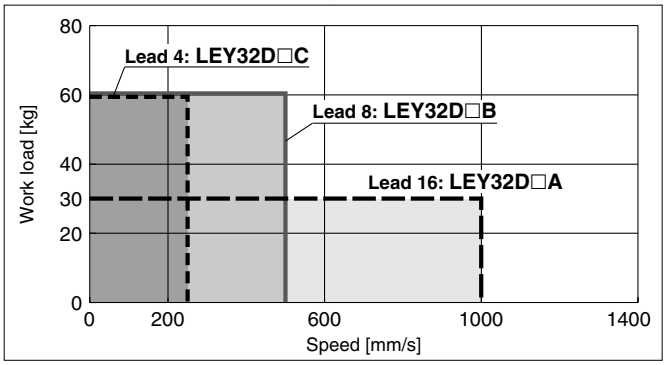

LEY63□ (Motor mounting position: Parallel/In-line)

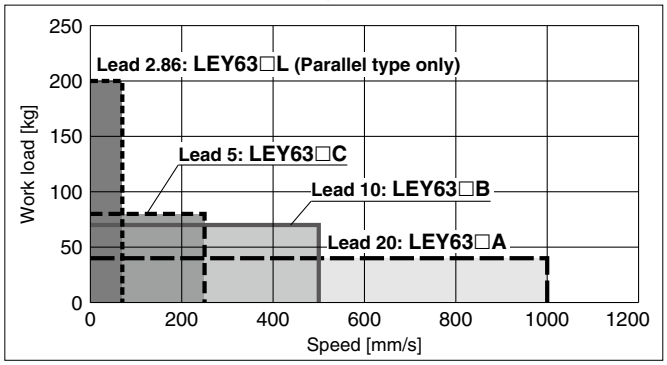

LEY100□ (Motor mounting position: Parallel/In-line)

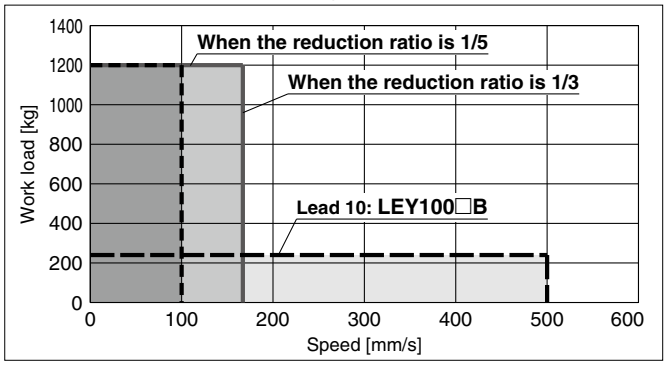

∗ Each value is the value when a reducer is built into the product.

Allowable Stroke Speed

[mm/s]

Model	Motor	Lead Symbol	Lead [mm]	Stroke [mm] Up to 100	Up to 200	Up to 300	Up to 400	Up to 500	Up to 600	Up to 700	Up to 800	Up to 900	Up to 1000
LEY25□ (Motor mounting position: Parallel/In-line)	100 W equivalent	A	12	900			600	—	—	—	—	—	—
		B	6	450			300	—	—	—	—	—	—
		C	3	225			150	—	—	—	—	—	—
		(Motor rotation speed)		(4500 rpm)			(3000 rpm)	—	—	—	—	—	—
LEY32□ (Motor mounting position: Parallel	200 W equivalent	A	20	1200				800	—	—	—	—	—
		B	10	600				400	—	—	—	—	—
		C	5	300				200	—	—	—	—	—
		(Motor rotation speed)		(3600 rpm)				(2400 rpm)	—	—	—	—	—
LEY32D (Motor mounting position: In-line)	200 W equivalent	A	16	1000				640	—	—	—	—	—
		B	8	500				320	—	—	—	—	—
		C	4	250				160	—	—	—	—	—
		(Motor rotation speed)		(3750 rpm)				(2400 rpm)	—	—	—	—	—
LEY63□ (Motor mounting position: Parallel/In-line)	400 W equivalent	A	20	1000					800	600	500	—	—
		B	10	500					400	300	250	—	—
		C	5	250					200	150	125	—	—
		(Motor rotation speed)		(3000 rpm)					(2400 rpm)	(1800 rpm)	(1500 rpm)	—	—
		L	2.86∗1	70								—	—
		(Motor rotation speed)		(1470 rpm)								—	—
LEY100□ (Motor mounting position: Parallel/In-line)	750 W equivalent	B	10	500					370	285	225	180	150
		∗2	3.3	167					123	95	75	60	50
		∗3	2	100					74	57	45	36	30
		(Motor rotation speed)		(3000 rpm)					(2225 rpm)	(1708 rpm)	(1353 rpm)	(1098 rpm)	(908 rpm)

∗1 Equivalent lead which includes the screw lead 5 and the pulley ratio 4:7 ∗2 Value when a reducer (reduction ratio 1/3) is built into the product ∗3 Value when a reducer (reduction ratio 1/5) is built into the product

Force Conversion Graph (Guide)

∗ These graphs show an example of when the standard motor is mounted. Calculate the force based on used motor and driver.

LEY25□ (Motor mounting position: Parallel/In-line)

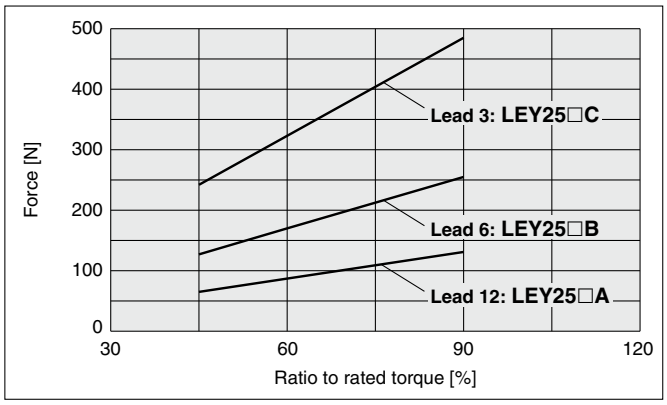

LEY32□ (Motor mounting position: Parallel)

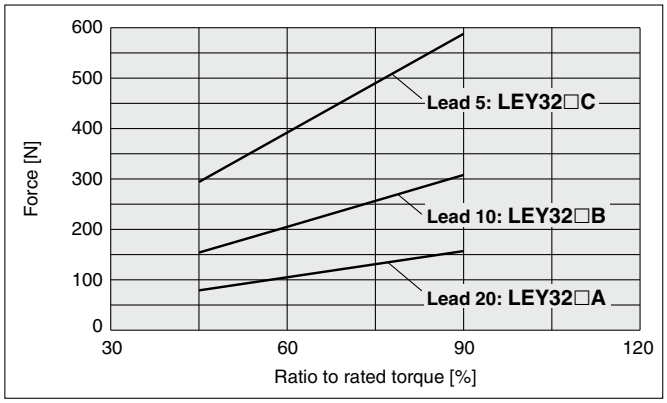

LEY32D□ (Motor mounting position: In-line)

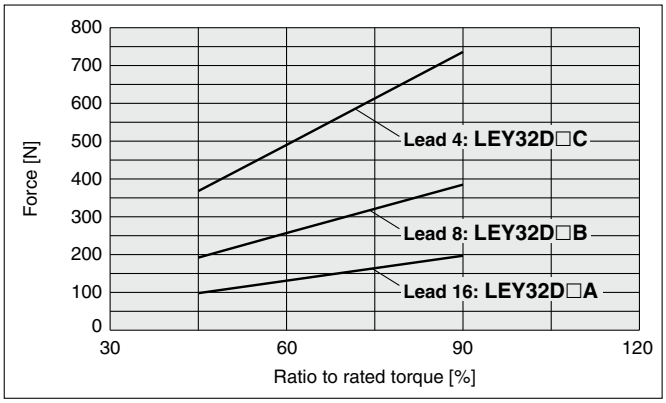

∗ When using the force control or speed control, set the maximum value to be no more than 90% of the rated torque.

LEY63□ (Motor mounting position: Parallel/In-line)

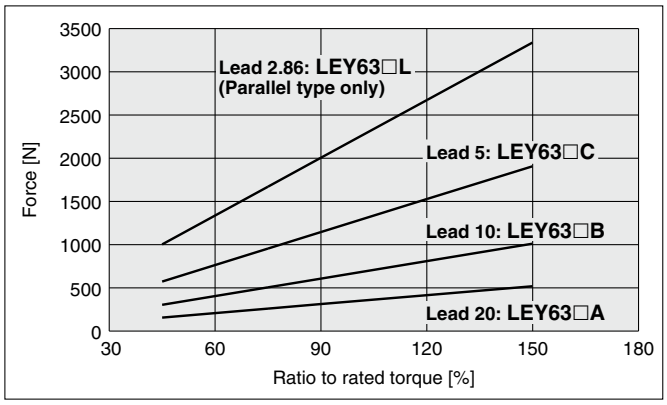

LEY100□ (Motor mounting position: Parallel/In-line)

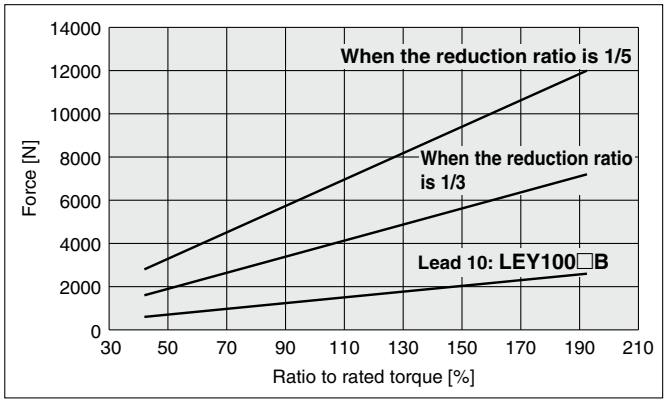

∗ Each value is the value when a reducer is built into the product.

Graph of Allowable Lateral Load on the Rod End (Guide)

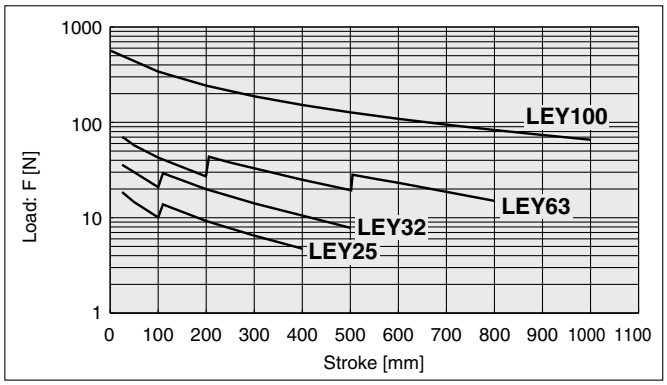

[Stroke] = [Product stroke] + [Distance from the rod end to the center of gravity of the workpiece]

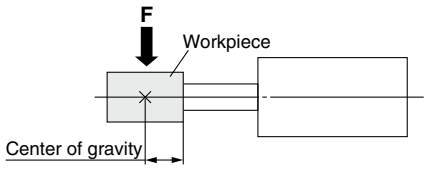

Force–Stroke Graph

∗ The values shown below are allowable values of the actuator body.
Do not use the actuator so that it exceeds these specification ranges.

LEY100□ (Motor mounting position: Parallel/In-line)

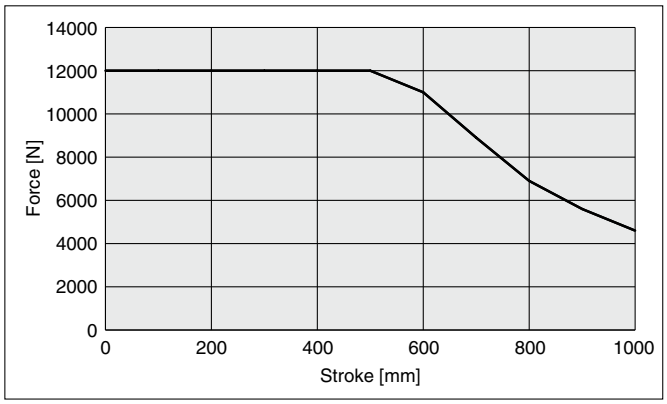

Motorless Type

Electric Actuator Rod Type

LEY Series LEY25, 32, 63

RoHS

How to Order

LEY H 25 ❐ NZ B – 100 ❐ ❐ ❐

❶ ❷ ❸ ❹ ❺ ❻ ❼ ❽ ❾

❶ Accuracy

Nil	Basic type
H	High-precision type

❷ Size

25
32
63

❹ Mounting type

NZ	NU
NY	NT
NX	NM1
NW	NM2
NV	NM3

❺ Lead [mm]

Symbol	LEY25	LEY32	LEY63
A	12	16 (20)	20
B	6	8 (10)	10
C	3	4 (5)	5
L	—	—	2.86*1

*1 Only available for top/right/left side parallel motor types (Equivalent leads which include the pulley ratio [4:7])
* The values shown in ( ) are the leads for the top/right/left side parallel motor types. Except mounting type NM1 (Equivalent leads which include the pulley ratio [1.25:1])

❻ Stroke [mm]

30	30
to	to
800	800

* Refer to the applicable stroke table.

❸ Motor mounting position

Nil	Top side parallel
R	Right side parallel
L	Left side parallel
D	In-line

❽ Rod end thread

Nil	Rod end female thread
M	Rod end male thread (1 rod end nut is included.)

❼ Dust-tight/Water-jet-proof <Only available for LEY63>

Symbol	LEY25/32	LEY63
Nil	IP4x equivalent	IP5x equivalent (Dust protected)
P	—	IP65 equivalent (Dust-tight/Water-jet-proof)/With vent hole tap

* When using the dust-tight/water-jet-proof (IP65 equivalent), correctly mount the fitting and tubing to the vent hole tap, and then place the end of the tubing in an area not exposed to dust or water.
* The fitting and tubing should be provided separately by the customer. Select [Applicable tubing O.D.: ø4 or more, Connection thread: Rc1/8].
* Cannot be used in environments exposed to cutting oil, etc. Take appropriate protective measures.
* For details on enclosure, refer to the "Enclosure" on pages 193 and 194.

❾ Mounting*1

Symbol	Type	Motor mounting position: Parallel	Motor mounting position: In-line
Nil	Ends tapped/Body bottom tapped*2	●	●
L	Foot	●	—
F	Rod flange*2	●*4	●
G	Head flange*2	●*5	—
D	Double clevis*3	●	—

*1 The mounting bracket is shipped together with the product but does not come assembled.
*2 For the horizontal cantilever mounting with the ends tapped, rod flange, or head flange types, use the actuator within the following stroke range.
· LEY25: 200 mm or less, LEY32: 100 mm or less, LEY63: 400 mm or less
*3 For the mounting with the double clevis type, use the actuator within the following stroke range.
· LEY25: 200 mm or less, LEY32: 200 mm or less
*4 If the stroke of the LEY25 is 30 mm or less, the rod flange may interfere with the motor.
*5 The head flange type is not available for the in-line type and the LEY32/63.

Applicable Stroke Table

●: Standard

Model \ Stroke [mm]	30	50	100	150	200	250	300	350	400	450	500	600	700	800	Manufacturable stroke range
LEY25	●	●	●	●	●	●	●	●	●	—	—	—	—	—	15 to 400
LEY32	●	●	●	●	●	●	●	●	●	●	●	—	—	—	20 to 500
LEY63	—	●	●	●	●	●	●	●	●	●	●	●	●	●	50 to 800

* Please contact SMC for non-standard strokes as they are produced as special orders.

Compatible Motors and Mounting Types*4

Applicable motor model: Manufacturer	Series	Size/Mounting type: 25 NZ	25 NY	25 NX	25 NM1	25 NM2	25 NM3	32 NZ	32 NY	32 NX	32 NW	32 NV	32 NU	32 NT	32 NM1	32 NM2	63 NZ	63 NY	63 NX	63 NW	63 NV	63 NU	63 NT
Mitsubishi Electric Corporation	MELSERVO JN/J4/J5	●	—	—	—	—	—	●	—	—	—	—	—	—	—	—	●	—	—	—	—	—	—
YASKAWA Electric Corporation	Σ-V/7/X	●*3	—	—	—	—	—	●	—	—	—	—	—	—	—	—	●	—	—	—	—	—	—
SANYO DENKI CO., LTD.	SANMOTION R	●	—	—	—	—	—	●	—	—	—	—	—	—	—	—	●	—	—	—	—	—	—
OMRON Corporation	OMNUC G5/1S	●	—	—	—	—	—	—	●	—	—	—	—	—	—	—	—	●	—	—	—	—	—
Panasonic Corporation	MINAS A5/A6	● (MHMF only)	●	—	—	—	—	—	●	—	—	—	—	—	—	—	—	●	—	—	—	—	—
FANUC CORPORATION	βis (-B)	●	—	—	—	—	—	● (β1 only)	—	—	●	—	—	—	—	—	● (β1 only)	—	—	●	—	—	—
NIDEC SANKYO CORPORATION	S-FLAG	●	—	—	—	—	—	●	—	—	—	—	—	—	—	—	●	—	—	—	—	—	—
KEYENCE CORPORATION	SV/SV2	●*3	—	—	—	—	—	●	—	—	—	—	—	—	—	—	●	—	—	—	—	—	—
FUJI ELECTRIC CO., LTD.	ALPHA7	●	—	—	—	—	—	●	—	—	—	—	—	—	—	—	●	—	—	—	—	—	—
MinebeaMitsumi Inc.	Hybrid stepping motors	—	—	—	●*1	—	●*2	—	—	—	—	—	—	—	●	—	—	—	—	—	—	—	—
Shinano Kenshi Co., Ltd.	CSB-BZ	—	—	—	●*1	—	●*2	—	—	—	—	—	—	—	—	—	—	—	—	—	—	—	—
ORIENTAL MOTOR Co., Ltd.	α STEP AR/AZ	—	—	—	—	● AR/AZ (46 only)	—	—	—	—	—	—	—	—	—	●	—	—	—	—	—	—	—
FASTECH Co., Ltd.	Ezi-SERVO	—	—	—	●	—	—	—	—	—	—	—	—	—	●	—	—	—	—	—	—	—	—
Rockwell Automation, Inc. (Allen-Bradley)	Kinetix MP/VP/TL	● (TL only)	—	—	—	—	—	—	—	●*1 (MP/VP only)	—	—	—	● (TL only)	—	—	—	—	●*1 (MPVP only)	—	—	—	● (TL only)
Beckhoff Automation GmbH	AM 30/31/80/81	●	—	—	—	—	—	—	—	●*1 (AM80/AM81 only)	—	●*1 (AM30 only)	● (AM31 only)	—	—	—	—	—	●*1 (AM80/AM81 only)	—	●*1 (AM30 only)	●*1 (AM31 only)	—
Siemens AG	SIMOTICS S-1FK7	—	—	●	—	—	—	—	—	●*1	—	—	—	—	—	—	—	—	●*1	—	—	—	—
Delta Electronics, Inc.	ASDA-A2	●	—	—	—	—	—	●	—	—	—	—	—	—	—	—	●	—	—	—	—	—	—
ANCA Motion	AMD2000	●	—	—	—	—	—	●	—	—	—	—	—	—	—	—	●	—	—	—	—	—	—

*1 Motor mounting position: In-line only *2 Motor mounting position: Parallel only
*3 For some motors, the connector may protrude from the motor body. Be sure to check for interference with the mounting surface before selecting a motor.
*4 The compatible motors and mounting types are typical examples. Select the mounting type after referring to the "Motor Mounting, Applicable Motor Dimensions" tables on the following "Dimensions" pages.

For auto switches, refer to pages 189 to 192.

Specifications

- Values in this specifications table are the allowable values of the actuator body with the standard motor mounted.
- Do not use the actuator so that it exceeds these values.

Model			LEY25 (Parallel) LEY25D (In-line)			LEY32 (Parallel)			LEY32D (In-line)		
Actuator specifications	Work load [kg]	Horizontal*1	18	50	50	30	60	60	30	60	60
		Vertical	8	16	30	9	19	37	12	24	46
	Force [N]*2 (Set value: Rated torque 45 to 90%)		65 to 131	127 to 255	242 to 485	79 to 157	154 to 308	294 to 588	98 to 197	192 to 385	368 to 736
	Max.*3 speed [mm/s]	Stroke range: Up to 300	900	450	225	1200	600	300	1000	500	250
		Stroke range: 305 to 400	600	300	150						
		Stroke range: 405 to 500	—	—	—	800	400	200	640	320	160
	Pushing speed [mm/s]*4		35 or less			30 or less					
	Max. acceleration/deceleration [mm/s²]		5000								
	Positioning repeatability [mm]	Basic type	±0.02								
		High-precision type	±0.01								
	Lost motion*5 [mm]	Basic type	0.1 or less								
		High-precision type	0.05 or less								
	Ball screw specifications	Thread size [mm]	ø10			ø12					
		Lead [mm] *9 (including pulley ratio 1.25:1)	12	6	3	16 (20)*9	8 (10)*9	4 (5)*9	16	8	4
		Shaft length [mm]	Stroke + 93.5			Stroke + 104.5					
	Impact/Vibration resistance [m/s²]*6		50/20								
	Actuation type		Ball screw + Belt (Parallel) Ball screw (In-line)			Ball screw + Belt [Pulley ratio 1.25:1]			Ball screw		
	Guide type		Sliding bushing (Piston rod)								
	Operating temperature range [°C]		5 to 40								
	Operating humidity range [%RH]		90 or less (No condensation)								
	Enclosure		IP40 (Excludes motor mounting part)								
*7 Other specifications	Actuation unit weight [kg] (* [ST]: Stroke)		0.15 + (0.69 x 10^{-3}) x [ST]: 100 st or less 0.16 + (0.69 x 10^{-3}) x [ST]: Over 100 st			0.24 + (1.40 x 10^{-3}) x [ST]: 100 st or less 0.28 + (1.40 x 10^{-3}) x [ST]: Over 100 st					
	Other inertia [kg·cm²]		0.012 (LEY25), 0.015 (LEY25D)			0.035 (LEY32), 0.061 (LEY32D)					
	Friction coefficient		0.05								
	Mechanical efficiency		0.8								
Reference motor spec. *8	Motor type		AC servo motor								
	Rated output capacity [W]		100			200					
	Rated torque [N·m]		0.32			0.64					

*1 This is the maximum value of the horizontal work load. An external guide is necessary to support the load (Friction coefficient of guide: 0.1 or less). The actual work load changes according to the condition of the external guide. Confirm the load using the actual device.
*2 The force setting range for the force control (Speed control mode, Torque control mode)
The force changes according to the set value. Set it with reference to the "Force Conversion Graph (Guide)" on page 151.
*3 The allowable speed changes according to the stroke.
*4 The allowable collision speed for collision with the workpiece
*5 A reference value for correcting errors in reciprocal operation
*6 Impact resistance: No malfunction occurred when the actuator was tested with a drop tester in both an axial direction and a perpendicular direction to the lead screw. (The test was performed with the actuator in the initial state.)
Vibration resistance: No malfunction occurred in a test ranging between 45 to 2000 Hz. The test was performed in both an axial direction and a perpendicular direction to the lead screw. (The test was performed with the actuator in the initial state.)
*7 Each value is only to be used as a guide to select a motor of the appropriate capacity.
*8 For other specifications, refer to the specifications of the motor that is to be installed.

Weight

Product Weight

Series	LEY25 (Motor mounting position: Parallel)									LEY32 (Motor mounting position: Parallel)										
Stroke [mm]	30	50	100	150	200	250	300	350	400	30	50	100	150	200	250	300	350	400	450	500
Product weight [kg]	0.8	0.9	1.1	1.3	1.5	1.7	1.8	2.0	2.2	1.4	1.5	1.8	2.3	2.6	2.9	3.1	3.4	3.7	4.0	4.3

Series	LEY25D (Motor mounting position: In-line)									LEY32D (Motor mounting position: In-line)										
Stroke [mm]	30	50	100	150	200	250	300	350	400	30	50	100	150	200	250	300	350	400	450	500
Product weight [kg]	0.8	0.9	1.1	1.3	1.5	1.7	1.9	2.0	2.2	1.4	1.6	1.8	2.3	2.6	2.9	3.2	3.4	3.7	4.0	4.3

Additional Weight

[kg]

Size		25	32
Rod end male thread	Male thread	0.03	0.03
	Nut	0.02	0.02
Foot bracket (2 sets including mounting bolt)		0.08	0.14
Rod flange (including mounting bolt)		0.17	0.20
Head flange (including mounting bolt)			
Double clevis (including pin, retaining ring, and mounting bolt)		0.16	0.22

Specifications

- Values in this specifications table are the allowable values of the actuator body with the standard motor mounted.
- Do not use the actuator so that it exceeds these values.

Model			LEY63D (In-line)			LEY63 (Parallel)			
Actuator specifications	Work load [kg]	Horizontal*1	40	70	80	40	70	80	200
		Vertical	19	38	72	19	38	72	115
	Force [N]*2 (Set value: Rated torque 45 to 150%)		156 to 521	304 to 1012	573 to 1910	156 to 521	304 to 1012	573 to 1910	1003 to 3343
	Max.*3 speed [mm/s]	Stroke range: Up to 500	1000	500	250	1000	500	250	70
		Stroke range: 505 to 600	800	400	200	800	400	200	
		Stroke range: 605 to 700	600	300	150	600	300	150	
		Stroke range: 705 to 800	500	250	125	500	250	125	
	Pushing speed [mm/s]*4		30 or less						
	Max. acceleration/deceleration [mm/s²]		5000						3000
	Positioning repeatability [mm]	Basic type	±0.02						
		High-precision type	±0.01						
	Lost motion*5 [mm]	Basic type	0.1 or less						
		High-precision type	0.05 or less						
	Ball screw specifications	Thread size [mm]	ø20						
		Lead [mm]	20	10	5	20	10	5	5 (2.86)
		Shaft length [mm]	Stroke + 147						
	Impact/Vibration resistance [m/s²]*6		50/20						
	Actuation type		Ball screw			Ball screw + Belt [Pulley ratio 1:1]			Ball screw + Belt [Pulley ratio 4:7]
	Guide type		Sliding bushing (Piston rod)						
	Operating temperature range [°C]		5 to 40						
	Operating humidity range [%RH]		90 or less (No condensation)						
	Enclosure		IP40 (Excludes motor mounting part)						
Other specifications *7	Actuation unit weight [kg] (* [ST]: Stroke)		0.84 + (2.77 x 10⁻³) x [ST]: 200 st or less 0.94 + (2.77 x 10⁻³) x [ST]: Over 200 st, 500 st or less 1.03 + (2.77 x 10⁻³) x [ST]: Over 500 st						
	Other inertia [kg·cm²]		0.056 (LEY63D)			0.110			0.053
	Friction coefficient		0.05						
	Mechanical efficiency		0.8						
Reference motor spec. *8	Motor type		AC servo motor						
	Rated output capacity [W]		400						
	Rated torque [N·m]		1.27						

*1 This is the maximum value of the horizontal work load. An external guide is necessary to support the load (Friction coefficient of guide: 0.1 or less). The actual work load changes according to the condition of the external guide. Confirm the load using the actual device.
*2 The force setting range for the force control (Speed control mode, Torque control mode)
The force changes according to the set value. Set it with reference to the "Force Conversion Graph (Guide)" on page 151.
*3 The allowable speed changes according to the stroke.
*4 The allowable collision speed for collision with the workpiece
*5 A reference value for correcting errors in reciprocal operation
*6 Impact resistance: No malfunction occurred when the actuator was tested with a drop tester in both an axial direction and a perpendicular direction to the lead screw. (The test was performed with the actuator in the initial state.)
Vibration resistance: No malfunction occurred in a test ranging between 45 to 2000 Hz. The test was performed in both an axial direction and a perpendicular direction to the lead screw. (The test was performed with the actuator in the initial state.)
*7 Each value is only to be used as a guide to select a motor of the appropriate capacity.
*8 For other specifications, refer to the specifications of the motor that is to be installed.

Weight

Product Weight

Model	LEY63D (Motor mounting position: In-line)												
Stroke [mm]	50	100	150	200	250	300	350	400	450	500	600	700	800
Product weight [kg]	3.7	4.2	4.8	5.3	6.5	7.0	7.6	8.2	8.8	9.3	11.0	12.1	13.3

Model	LEY63 (Motor mounting position: Parallel)												
Stroke [mm]	50	100	150	200	250	300	350	400	450	500	600	700	800
Product weight [kg]	3.5	4.0	4.7	5.2	6.4	6.9	7.5	8.0	8.6	9.1	10.8	12.0	13.1

Additional Weight

[kg]

Size		63
Rod end male thread	Male thread	0.12
	Nut	0.04
Rod flange (including mounting bolt)		0.51
Foot bracket (2 sets including mounting bolt)		0.26
Double clevis (including pin, retaining ring, and mounting bolt)		0.58

Refer to the "Motor Mounting" on pages 177 and 178 for details about motor mounting and included parts.

Dimensions: Top/Right/Left Side Parallel Motor

LEY25, 32, 63

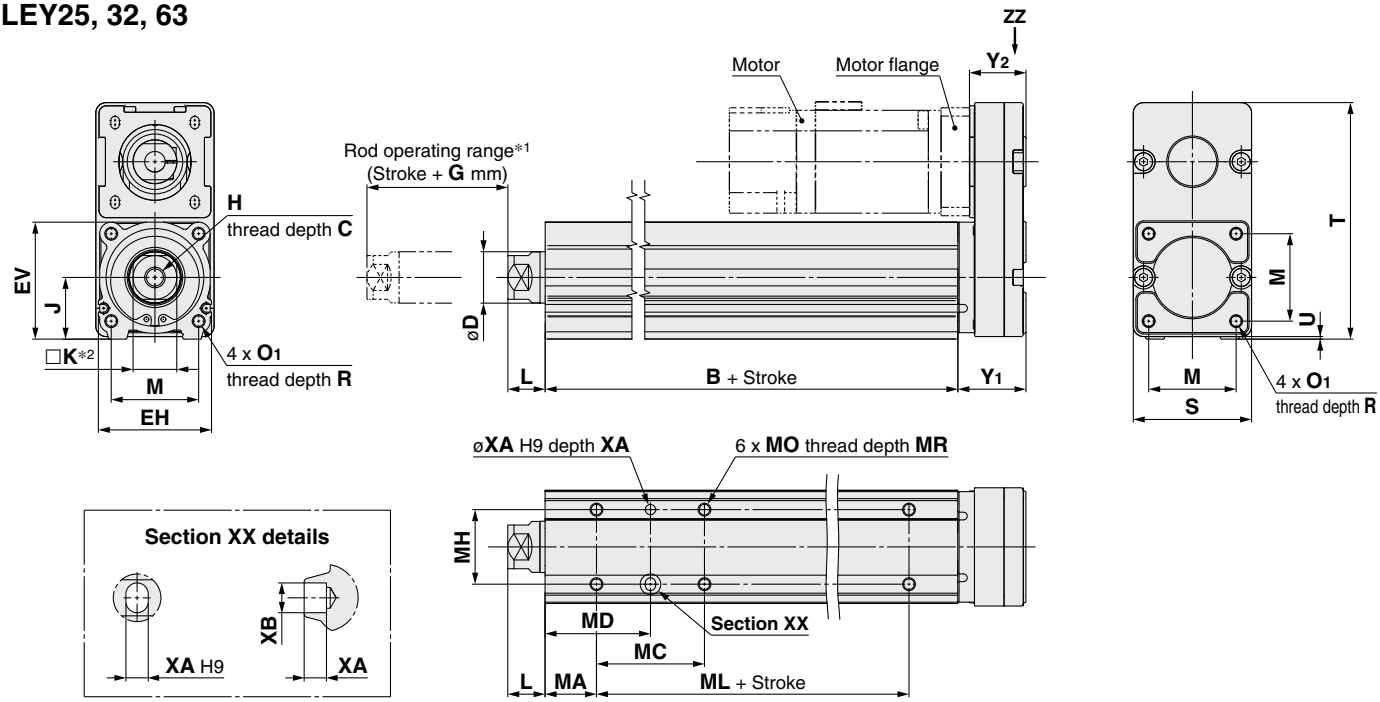

*1 Do not allow collisions at either end of the rod operating range at a speed exceeding "pushing speed." Additionally, when running the positioning operation, do not set within 2 mm of both ends for size 25, 32, and do not set within 4 mm of both ends for size 63.

*2 The direction of rod end width across flats (□K) differs depending on the products.

IP65 equivalent (Dust-tight/Water-jet-proof): LEY63□□□-□P (View ZZ)

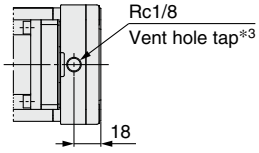

*3 When using the dust-tight/water-jet-proof (IP65 equivalent), correctly mount the fitting and tubing to the vent hole tap, and then place the end of the tubing in an area not exposed to dust or water. The fitting and tubing should be provided separately by the customer.
Select [Applicable tubing O.D.: ø4 or more, Connection thread: Rc1/8].

Dimensions

[mm]

Size	Stroke range [mm]	B	C	D	EH	EV	H	J	K	L	M	O1	R	S	T	U	Y1	Y2	G
25	30 to 100	89.5	13	20	44	45.5	M8 x 1.25	24	17	12.5	34	M5 x 0.8	8	46	92	1	26.5	22	4
	105 to 400	114.5																	
32	20 to 100	96	13	25	51	56.5	M8 x 1.25	31	22	16.5	40	M6 x 1.0	10	60	118	1	34	27	4
	105 to 500	126																	
63	50 to 200	123	21	40	76	82	M16 x 2	44	36	33.4	60	M8 x 1.25	16	80	146	4	32.2	29	8
	205 to 500	158																	
	505 to 800	193																	

* The L measurement is when the unit is at the retracted stroke end position.

[mm]

Size	Stroke range [mm]	MA	MC	MD	MH	ML	MO	MR	XA	XB
25	30 to 35	20	24	32	29	50	M5 x 0.8	6.5	4	5
	40 to 100		42	41						
	105 to 120					75				
	125 to 200		59	49.5						
	205 to 400		76	58						
32	30 to 35	25	22	36	30	50	M6 x 1	8.5	5	6
	40 to 100		36	43						
	105 to 120					80				
	125 to 200		53	51.5						
	205 to 500		70	60						
63	50 to 70	38	24	50	44	65	M8 x 1.25	10	6	7
	75 to 120		45	60.5						
	125 to 200		58	67						
	205 to 500		86	81		100				
	505 to 800					135				

Dimensions: Top/Right/Left Side Parallel Motor

Refer to the "Motor Mounting" on pages 177 and 178 for details about motor mounting and included parts.

Motor flange dimensions

LEY25: NZ, NY, NX
LEY32: NZ, NY, NW, NU, NT

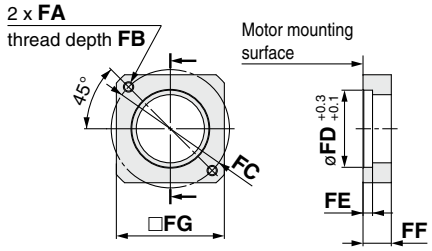

LEY25: NM1, NM2, NM3

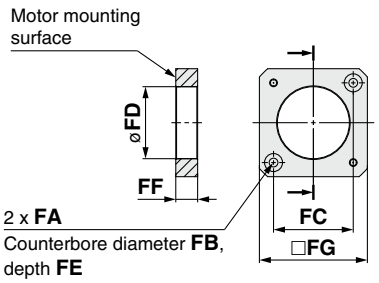

LEY32: NM1, NM2

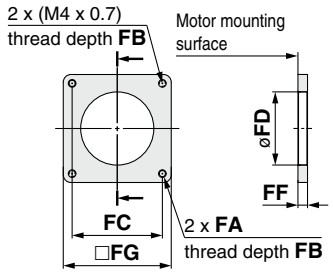

LEY63: NZ, NY, NW, NT

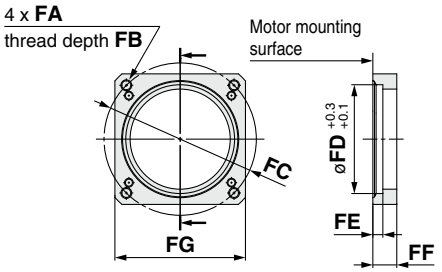

Motor Mounting, Applicable Motor Dimensions

[mm]

Size	Mounting type	FA Mounting type	FA Applicable motor	FB	FC	FD	FE (Max.)	FF	FG	FJ	FK
25	NZ	M4 x 0.7	ø4.5	7.5	ø46	30	3.7	11	42	8	25 ±1
	NY	M3 x 0.5	ø3.4	5.5	ø45	30	5	11	38	8	25 ±1
	NX	M4 x 0.7	ø4.5	7	ø46	30	3.7	8	42	8	18 ±1
	NM1	ø3.4	M3	7	□31	28	3.5	8.5	42	5*1	24 ±1
	NM2	ø3.4	M3	7	□31	28	3.5	8.5	42	6	20 ±1
	NM3	ø3.4	M3	7	□31	28	3.5	5.5	42	5*1	20 ±1
32	NZ	M5 x 0.8	ø5.5	8.5	ø70	50	4.6	13	60	14	30 ±1
	NY	M4 x 0.7	ø4.5	7	ø70	50	4.6	13	60	11	30 ±1
	NW	M5 x 0.8	ø5.5	8.5	ø70	50	4.6	13	60	9	25 ±1
	NU	M5 x 0.8	ø5.5	8.5	ø70	50	4.6	13	60	11	23 ±1
	NT	M5 x 0.8	ø5.5	8.5	ø70	50	4.6	17	60	12	30 ±1
	NM1	M4 x 0.7	ø4.5	(5)	□47.1	38.1	—	5	56.4	6.35*1	20 ±1
	NM2	M4 x 0.7	ø4.5	8	□50	38.1	—	11.5	60	10	24 ±1
63	NZ	M5 x 0.8	ø5.5	8.5	ø70	50	4.6	11	60	14	30 ±1
	NW	M5 x 0.8	ø5.5	8.5	ø70	50	4.6	11	60	9	25 ±1
	NY	M4 x 0.7	ø4.5	8	ø70	50	4.6	11	60	14	30 ±1
	NT	M5 x 0.8	ø5.5	8.5	ø70	50	4.6	14.5	60	12	30 ±1

*1 Shaft type: D-cut shaft

Applicable motor dimensions

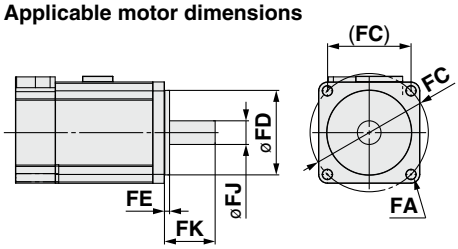

Left side parallel motor type: LEY 25/32/63 L

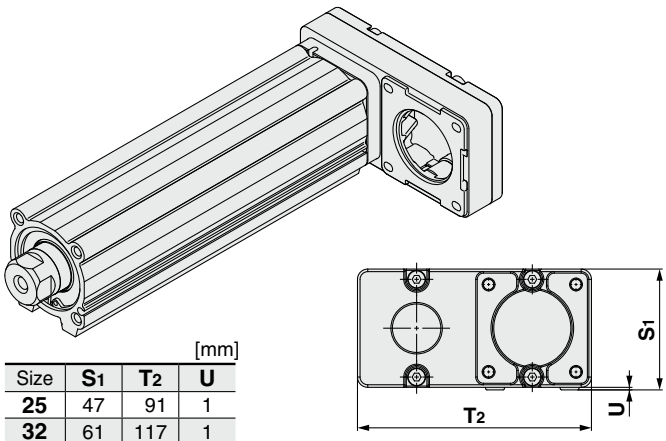

[mm]

Size	S_1	T_2	U
25	47	91	1
32	61	117	1
63	84	142	4

Right side parallel motor type: LEY 25/32/63 R

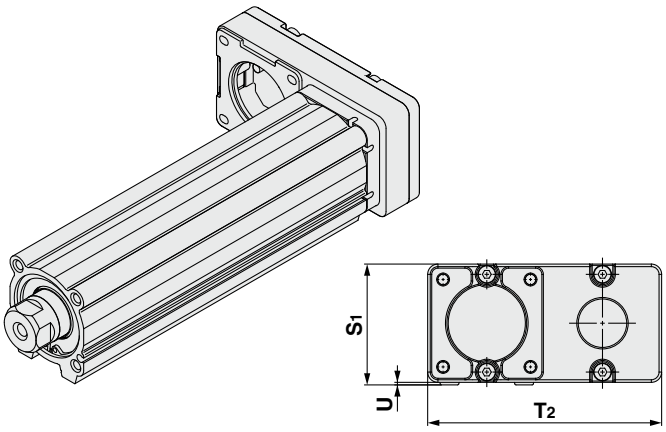

* When the motor is mounted on the left or right side in parallel, the groove for auto switch on the side to which the motor is mounted is hidden.

Refer to the "Motor Mounting" on page 181 for details about motor mounting and included parts.

Dimensions: In-line Motor

LEY25, 32

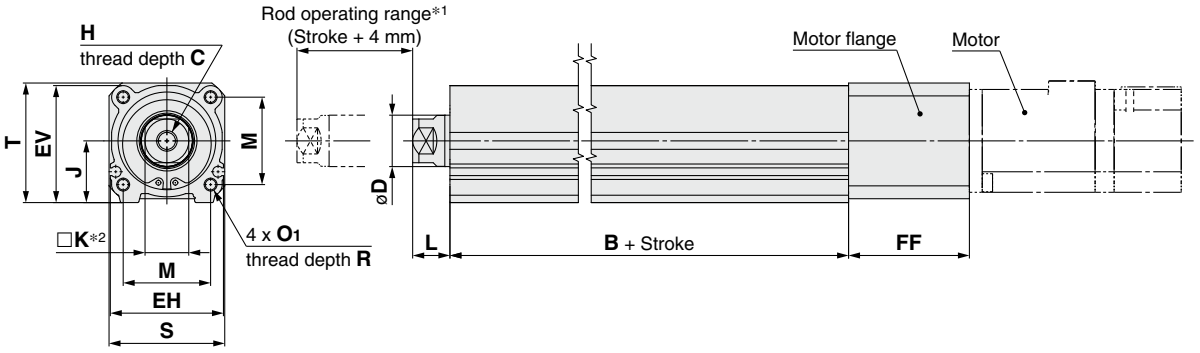

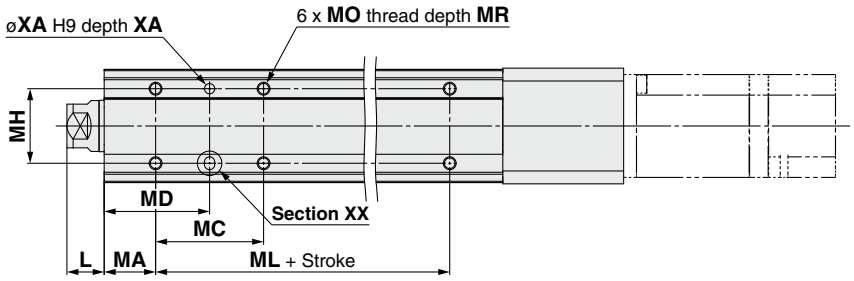

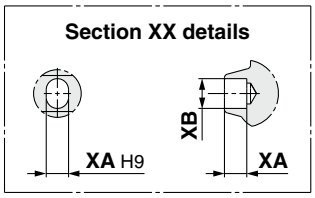

*1 Do not allow collisions at either end of the rod operating range at a speed exceeding "pushing speed." Additionally, when running the positioning operation, do not set within 2 mm of both ends.
*2 The direction of rod end width across flats (□K) differs depending on the products.

Dimensions

[mm]

Size	Stroke range [mm]	B	C	D	EH	EV	H	J	K	L	M	O1	R	S	T	U
25	30 to 100	89.5	13	20	44	45.5	M8 x 1.25	24	17	12.5	34	M5 x 0.8	8	45	46.5	1.5
	105 to 400	114.5														
32	30 to 100	96	13	25	51	56.5	M8 x 1.25	31	22	16.5	40	M6 x 1.0	10	60	61	1
	105 to 500	126														

* The L measurement is when the unit is at the retracted stroke end position.

[mm]

Size	Stroke range [mm]	MA	MC	MD	MH	ML	MO	MR	XA	XB
25	30 to 35	20	24	32	29	50	M5 x 0.8	6.5	4	5
	40 to 100		42	41						
	105 to 120					75				
	125 to 200		59	49.5						
	205 to 400		76	58						
32	30 to 35	25	22	36	30	50	M6 x 1.0	8.5	5	6
	40 to 100		36	43						
	105 to 120					80				
	125 to 200		53	51.5						
	205 to 500		70	60						

Refer to the "Motor Mounting" on page 181 for details about motor mounting and included parts.

Dimensions: In-line Motor

Motor flange dimensions
LEY25: NZ, NY, NX
LEY32: NZ, NY, NX, NW, NV, NU, NT

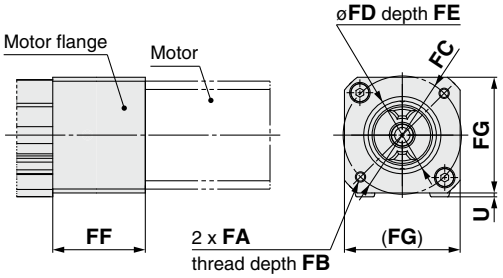

LEY25: NM1, NM2

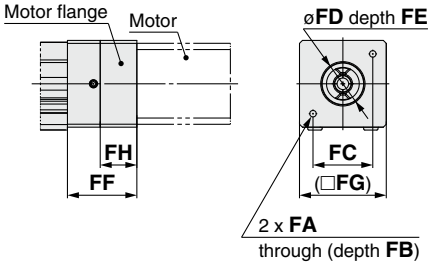

LEY32: NM1

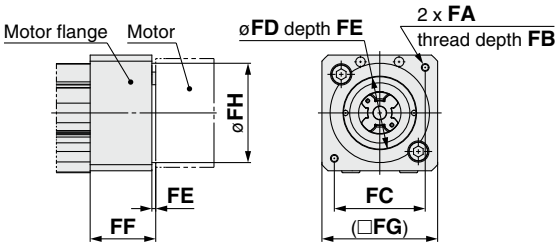

LEY32: NM2

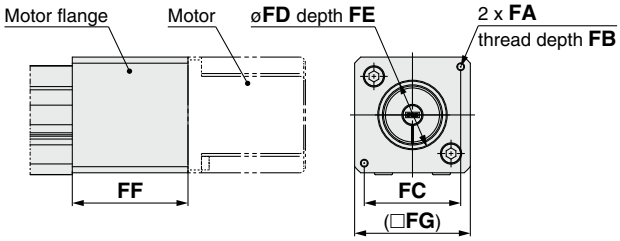

Motor Mounting, Applicable Motor Dimensions

[mm]

Size	Mounting type	FA		FB	FC	FD	FE (Max.)	FF	FG	FH	FJ	FK
		Mounting type	Applicable motor									
25	NZ	M4 x 0.7	ø4.5	7.5	ø46	30	3.7	47	45	—	8	25 ±1
	NY	M3 x 0.5	ø3.4	6	ø45	30	4	47	45	—	8	25 ±1
	NX	M4 x 0.7	ø4.5	7.5	ø46	30	3.7	47	45	—	8	18 ±1
	NM1	ø3.4	M3	17	□31	22	2.5	36	45	19	5*1	18 to 25
	NM2	ø3.4	M3	28	□31	22	2.5	47	45	30	6	20 ±1
32	NZ	M5 x 0.8	ø5.8	8.5	ø70	50	3.3	60	60	—	14	30 ±1
	NY	M4 x 0.7	ø4.5	8	ø70	50	3.3	60	60	—	11	30 ±1
	NX	M5 x 0.8	ø5.8	8.5	ø63	40	3.5	63	60	—	9	20 ±1
	NW	M5 x 0.8	ø5.8	8.5	ø70	50	3.3	60	60	—	9	25 ±1
	NV	M4 x 0.7	ø4.5	8	ø63	40	3.3	63	60	—	9	20 ±1
	NU	M5 x 0.8	ø5.8	8.5	ø70	50	3.3	60	60	—	11	23 ±1
	NT	M5 x 0.8	ø5.8	8.5	ø70	50	3.3	60	60	—	12	30 ±1
	NM1	M4 x 0.7	ø4.5	9.5	□47.1	38.1	2	34	60	51.5	6.35*1	20 ±1
	NM2	M4 x 0.7	ø4.5	8	□50	36	3.3	60	60	—	10	24 ±1

*1 Shaft type: D-cut shaft

Applicable motor dimensions

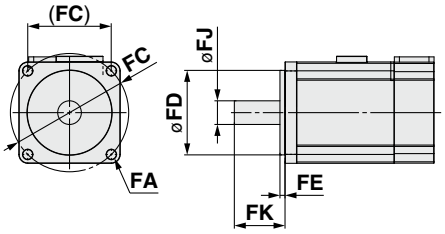

Refer to the "Motor Mounting" on page 182 for details about motor mounting and included parts.

Dimensions: In-line Motor

LEY63

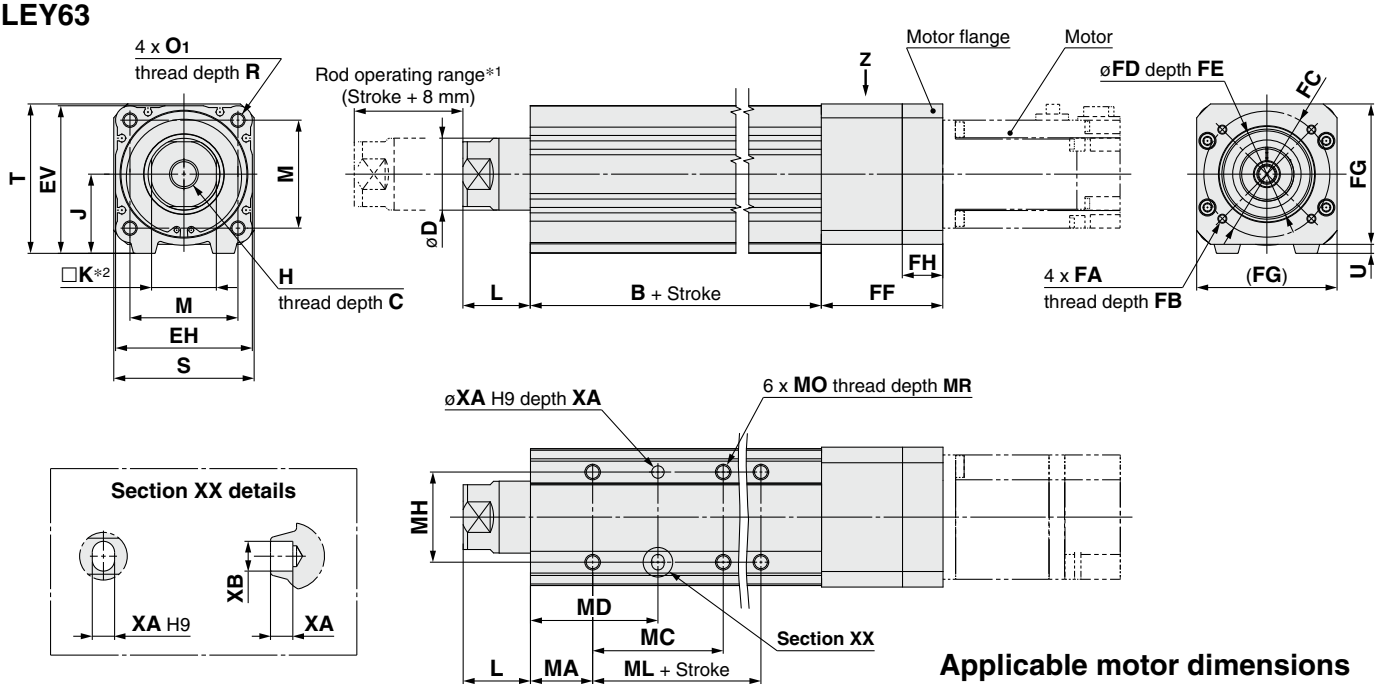

*1 Do not allow collisions at either end of the rod operating range at a speed exceeding "pushing speed." Additionally, when running the positioning operation, do not set within 4 mm of both ends.
*2 The direction of rod end width across flats (□K) differs depending on the products.

Applicable motor dimensions

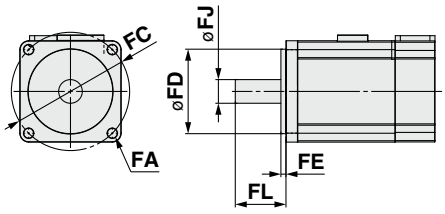

IP65 equivalent (Dust-tight/Water-jet-proof): LEY63DN□□-□P (View Z)

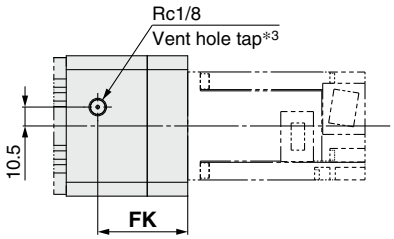

*3 When using the dust-tight/water-jet-proof (IP65 equivalent), correctly mount the fitting and tubing to the vent hole tap, and then place the end of the tubing in an area not exposed to dust or water. The fitting and tubing should be provided separately by the customer.
Select [Applicable tubing O.D.: ø4 or more, Connection thread: Rc1/8].

Dimensions

[mm]

Size	Stroke range [mm]	B	C	D	EH	EV	H	J	K	L	M	O1	R	S	T	U
63	50 to 200	123	21	40	76	82	M16 x 2	44	36	33.4	60	M8 x 1.25	16	78	83	5
	205 to 500	158														
	505 to 800	193														

* The L measurement is when the unit is at the retracted stroke end position.

[mm]

Size	Stroke range [mm]	MA	MC	MD	MH	ML	MO	MR	XA	XB
63	50 to 70	38	24	50	44	65	M8 x 1.25	10	6	7
	75 to 120		45	60.5						
	125 to 200		58	67						
	205 to 500		86	81		100				
	505 to 800					135				

Motor Mounting, Applicable Motor Dimensions

[mm]

Size	Mounting type	FA		FB	FC	FD	FE (Max.)	FF	FG	FH	FK	FJ	FL
		Mounting type	Applicable motor										
63	NZ	M5 x 0.8	ø5.5	10	ø70	50	3.5	67.7	78	22.5	50	14	30 ±1
	NY	M4 x 0.7	ø4.5	8	ø70	50	3.5	67.7	78	22.5	50	14	30 ±1
	NX	M5 x 0.8	ø5.5	10	ø63	40	3.5	72.7	78	27.5	55	9	20 ±1
	NW	M5 x 0.8	ø5.5	10	ø70	50	3.5	67.7	78	22.5	50	9	25 ±1
	NV	M4 x 0.7	ø4.5	8	ø63	40	3.5	72.7	78	27.5	55	9	20 ±1
	NU	M5 x 0.8	ø5.5	10	ø70	50	3.5	67.7	78	22.5	50	11	23 ±1
	NT	M5 x 0.8	ø5.5	10	ø70	50	3.5	67.7	78	22.5	50	12	30 ±1

Dimensions

Rod end male thread: LEY32□□B-□□M (25, 63 / A, C)

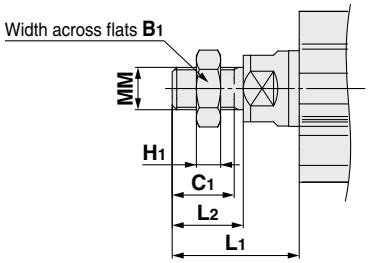

* Refer to the **Web Catalog** for details on the rod end nut and mounting bracket.
* Refer to the precautions on pages 194 and 195 when mounting end brackets such as knuckle joint or workpieces.

[mm]

Size	B_1	C_1	H_1	L_1	L_2	MM
25	22	20.5	8	36	23.5	M14 x 1.5
32	22	20.5	8	40	23.5	M14 x 1.5
63	27	26	11	72.4	39	M18 x 1.5

* The L_1 measurement is when the unit is at the retracted stroke end position.

Foot: LEY32□□B-□□□L (25, 63 / A, C)

Included parts
- Foot bracket
- Body mounting bolt

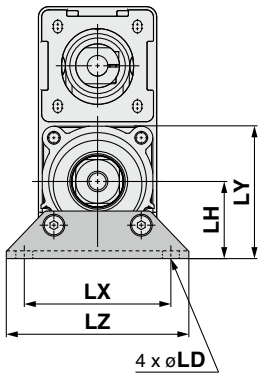

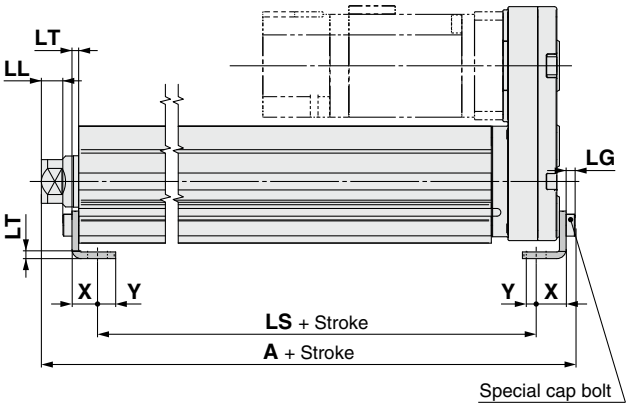

Outward mounting

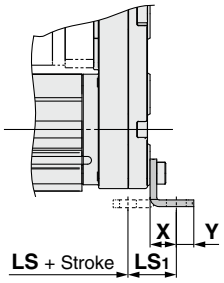

Foot

[mm]

Size	Stroke range [mm]	A	LS	LS_1	LL	LD	LG	LH	LT	LX	LY	LZ	X	Y
25	30 to 100	134.6	98.8	19.8	6.4	6.6	3.5	30	2.6	57	51.5	71	11.2	5.8
	105 to 400	159.6	123.8											
32	30 to 100	153.7	114	19.2	9.3	6.6	4	36	3.2	76	61.5	90	11.2	7
	105 to 500	183.7	144											
63	50 to 200	196.8	133.2	25.2	25.2	9	5	50	3.2	95	88	110	14.2	8
	205 to 500	231.8	168.2											
	505 to 800	266.8	203.2											

Material: Carbon steel (Chromating)
* The A and LL measurements are when the unit is at the retracted stroke end position.
* When the motor mounting is the right or left side parallel type, the head side foot bracket should be mounted outward.

Dimensions

Rod flange: LEY32□□B-□□□F (25 / 63, A / C)

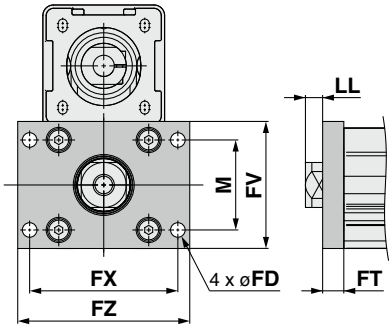

Head flange: LEY25□□B-□□□G (A / C)

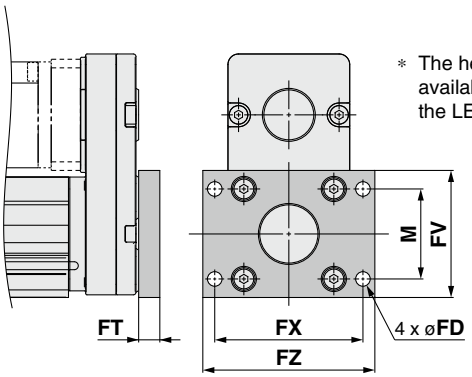

∗ The head flange type is not available for the in-line type and the LEY32/63.

Included parts
- Flange
- Body mounting bolt

Rod/Head Flange [mm]

Size	FD	FT	FV	FX	FZ	LL	M
25	5.5	8	48	56	65	4.5	34
32	5.5	8	54	62	72	8.5	40
63	9	9	80	92	108	24.4	60

Material: Carbon steel (Nickel plating)
∗ The LL measurement is when the unit is at the retracted stroke end position.

Double clevis: LEY32□□B-□□□D (25 / 63, A / C)

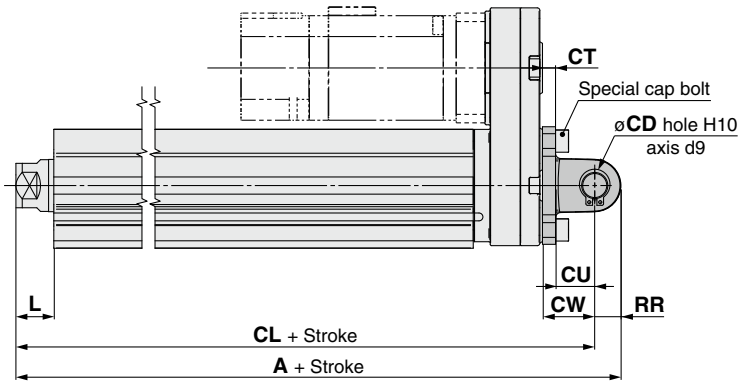

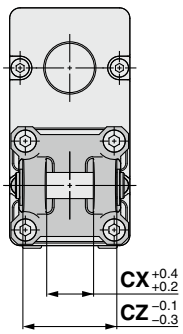

Included parts
- Double clevis
- Body mounting bolt
- Clevis pin
- Retaining ring

∗ Refer to the **Web Catalog** for details on the rod end nut and mounting bracket.

Double Clevis [mm]

Size	Stroke range [mm]	A	CL	CD	CT	CU	CW	CX	CZ	L	RR
25	30 to 100	158.5	148.5	10	5	14	20	18	36	12.5	10
	105 to 200	183.5	173.5								
32	30 to 100	178.5	168.5	10	6	14	22	18	36	16.5	10
	105 to 200	208.5	198.5								
63	50 to 200	232.6	218.6	14	8	22	30	22	44	33.4	14
	205 to 300	267.6	253.6								

Material: Cast iron (Coating)
∗ The A, CL, and L measurements are when the unit is at the retracted stroke end position.

Electric Actuator/ Rod Type

LEY Series LEY100

RoHS

How to Order

Motorless Type LEY 100 D NN B – 200 ❑ ❑

❶ ❷ ❸ ❹ ❺ ❻ ❼

❶ Size

100

❷ Motor mounting position

Nil	Parallel
D	In-line

❸ Motor type∗1

Symbol	Type	Note
NN	ø80-M5 thread hole	

∗1 Order the motor adapter, motor flange, and return box separately. Refer to pages 167 and 168 for details.

❹ Lead [mm]

Symbol	LEY100
B	10

❺ Stroke [mm]

100	100
to	to
1000	1000

∗ For details, refer to the applicable stroke table below.

❻ Rod end thread

Nil	Rod end female thread
M	Rod end male thread (1 rod end nut is included.)

❼ Mounting∗1

Symbol	Type	Motor mounting position	
		Parallel	In-line
Nil	Ends tapped∗2	●	●
L	Foot bracket (in-line)	—	●
H	Foot bracket	●	●
F	Rod flange∗2	●	●
D	Double clevis∗3	●	—

∗1 The mounting bracket is shipped together with the product but does not come assembled.
∗2 Do not mount using the “ends tapped” or “flange” options for the horizontal type with one end secured.
∗3 Double clevis type: Use within the stroke limit of 400 or less and the thrust limit of 6000 or less.

Applicable Stroke Table

Size	Stroke [mm]										
	100	200	300	400	500	600	700	800	900	1000	Manufacturable stroke range
100	●	●	●	●	●	●	●	●	●	●	100 to 1000

∗ Please contact SMC for non-standard strokes as they are produced as special orders.

Compatible Motors and Mounting Types

Manufacturer	Series	NN
Mitsubishi Electric Corporation	MELSERVO-J4/J5	●
YASKAWA Electric Corporation	Σ-V/7/X	●
NIDEC SANKYO CORPORATION	S-FLAG	●
KEYENCE CORPORATION	SV/SV2	●
Delta Electronics, Inc.	ASDA-A2	●

Specifications

∗ The values in this specifications table are the allowable values of the actuator body with the standard motor mounted.
∗ Do not use the actuator so that it exceeds these values.

Model				LEY100□NNB
Actuator specifications	Stroke [mm]∗9			100, 200, 300, 400, 500, 600, 700, 800, 900, 1000
	Work load [kg]		Horizontal∗1	240/1200 [When equipped with reducer (reduction ratio 1/5)]
			Vertical	80/200 [When equipped with reducer (reduction ratio 1/5)]
	Rated force [N]/Set value: Rated torque 87%∗2			1100/5500 [When equipped with reducer (reduction ratio 1/5)]
	Max. force [N]/Set value: Max. torque 192%∗2 ∗3			2600/12000 [When equipped with reducer (reduction ratio 1/5)]
	Max. speed [mm/s]∗4	Stroke range	Up to 500	500
			600	370
			700	285
			800	225
			900	180
			1000	150
	Pushing speed [mm/s]∗5			20 or less
	Max. acceleration/deceleration [mm/s²]			3000/2000 [When equipped with reducer (reduction ratio 1/5)]
	Positioning repeatability [mm]			±0.02
	Lost motion [mm]∗6			0.1 or less
	Ball screw specifications	Thread size [mm]		ø32
		Lead [mm]		10
		Shaft length [mm]		Stroke + 202
	Impact/Vibration resistance [m/s²]∗7			Motor mounting position: In-line 50/20, Motor mounting position: Parallel 50/15
	Actuation type			Motor mounting position: In-line/Ball screw, Motor mounting position: Parallel/Ball screw + Belt
	Guide type			Sliding bushing (Piston rod)
	Operating temperature range [°C]			5 to 40
	Operating humidity range [%RH]			90 or less (No condensation)
	Enclosure			IP40 (Excludes motor mounting part)
Other specifications∗8	Actuation unit weight [kg] (∗ [ST]: Stroke)			2.80 + (7.50 x 10^{-3}) x [ST]
	Other inertia [kg·cm]			0.047
	Friction coefficient			0.05
	Mechanical efficiency			0.9
Reference motor spec.	Motor type			AC servo motor
	Rated output capacity [W]			750
	Rated torque [N·m]			2.4
	Rated rotation [rpm]			3000

∗1 This is the max. value of the horizontal work load. An external guide is necessary to support the load (Friction coefficient of guide: 0.1 or less).
The actual work load changes according to the condition of the external guide. Confirm the load using the actual device.
∗2 The force setting range for the force control (Speed control mode, Torque control mode)
The force changes according to the set value. Set it with reference to the "Force Conversion Graph (Guide)" on page 151.
∗3 The max. force changes according to the stroke. Check the "Force–Stroke Graph" on page 152.
For "double clevis type": Maximum thrust limited to 6000 or less
∗4 The allowable speed changes according to the stroke.
∗5 The allowable collision speed for collision with the workpiece
∗6 A reference value for correcting errors in reciprocal operation
∗7 Impact resistance: No malfunction occurred when the actuator was tested with a drop tester in both an axial direction and a perpendicular direction to the lead screw. (The test was performed with the actuator in the initial state.)
Vibration resistance: No malfunction occurred in a test ranging between 45 to 2000 Hz. The test was performed in both an axial direction and a perpendicular direction to the lead screw. (The test was performed with the actuator in the initial state.)
∗8 Each value is only to be used as a guide to select a motor of the appropriate capacity.
∗9 For "double clevis type": Stroke limited to 400 or less.

Weight

Product Weight

[kg]

Stroke [mm]		100	200	300	400	500	600	700	800	900	1000
LEY100DNNB	Motorless	8.1	9.8	11.4	13.1	14.7	16.3	18.0	19.6	21.3	22.9

Additional Weight

[kg]

Size		100
Motor option	With lock	1.0
Rod end thread	Male thread	0.11
	Nut	0.05
Mounting	Foot bracket (in-line)	0.8
	Foot bracket	1.4
	Flange	1.1
	Double clevis	1.3

Refer to the "Motor Mounting" on pages 179, 180, and 183 for details about motor mounting and included parts.

Dimensions: Parallel/In-line

LEY100

Dimensions with ∗ indicate the dimensions when a male rod end is selected.

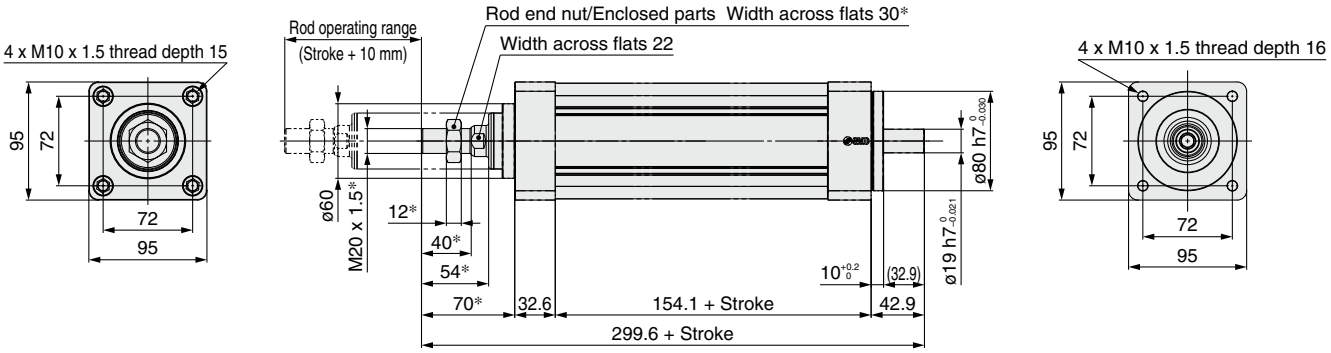

Rod end female thread: LEY100□NNB-□□□

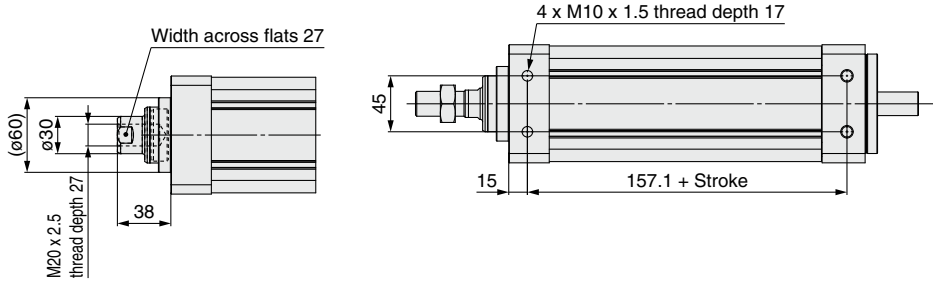

Rod flange: LEY100□NNB-□□□F

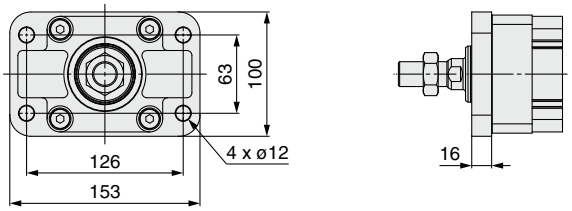

Foot bracket: LEY100□NNB-□□□L

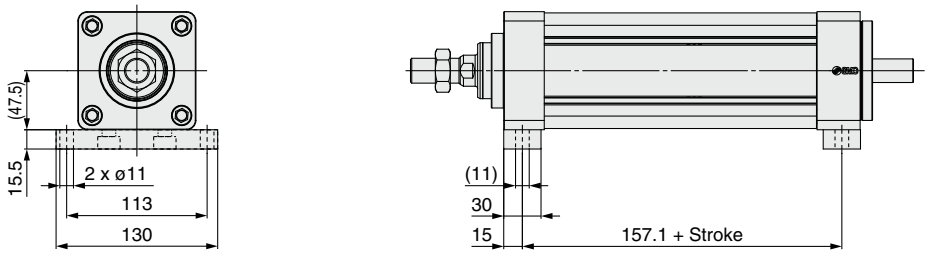

∗ The foot bracket (option "L") is only for the in-line type.

Refer to the "Motor Mounting" on pages 179, 180, and 183 for details about motor mounting and included parts.

Dimensions: Parallel/In-line

Foot bracket: LEY100NN□-□□□H

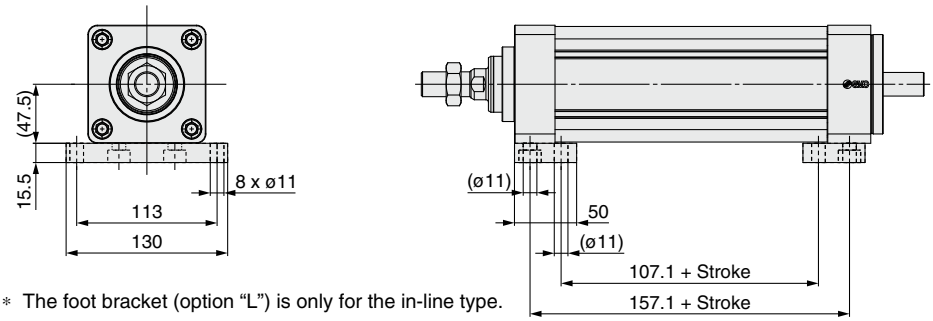

∗ The foot bracket (option "L") is only for the in-line type.

Double clevis: LEY100NNB-□□□D

Included parts
- Double clevis
- Body mounting bolt
- Clevis pin
- Retaining ring

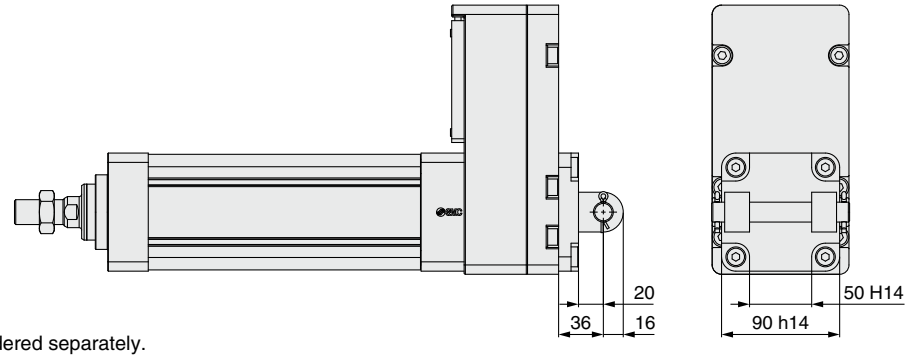

∗ The motor flange assembly needs to be ordered separately.
∗ The diagram shows the assembled motor flange assembly.

LEY100 Series
Options

Motor Flange Assembly

Motor mounting position: In-line

Motor flange **LEY − MF 100 D − NZ**

❶

❶ Mounting Type

Mounting type	Component parts						
	Ⓐ Motor adapter	Ⓑ Motor flange		Ⓒ Coupling		Ⓓ Reducer	
		Mounting type NZ□	Mounting type NG□	O.D. ø40	O.D. ø55	Reduction ratio 1/3	Reduction ratio 1/5
NZ	●	●	—	△	—	—	—
NZC	●	●	—	●	—	—	—
NG	●	—	●	—	△	△	
NGC	●	—	●	—	●	△	
NGC3	●	—	●	—	●	●	—
NGC5	●	—	●	—	●	—	●
N	●	△		△		△	

∗ The parts marked with a ● are component parts. The parts marked with a △ should be prepared by the customer as necessary.
∗ Component parts Ⓐ, Ⓑ, Ⓒ, and Ⓓ come with mounting screws.
∗ The motor mounting screws should be provided by the customer.

Compatible Motors

Manufacturer	Series	NZC/NGC3/NGC5
Mitsubishi Electric Corporation	MELSERVO-J4/J5	●
YASKAWA Electric Corporation	Σ-V/7/X	●
NIDEC SANKYO CORPORATION	S-FLAG	●
KEYENCE CORPORATION	SV/SV2	●
Delta Electronics, Inc.	ASDA-A2	●

Applicable motor dimensions

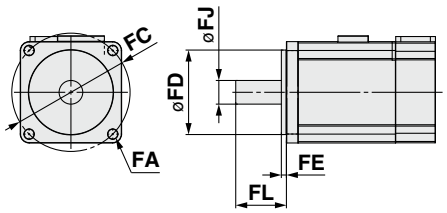

Applicable Motor Dimensions

[mm]

Size	FA	FC	FD	FE (Max.)	FJ	FL
100	ø6.6	ø90	70	4.5	19	40 to 44

Ⓐ Motor adapter

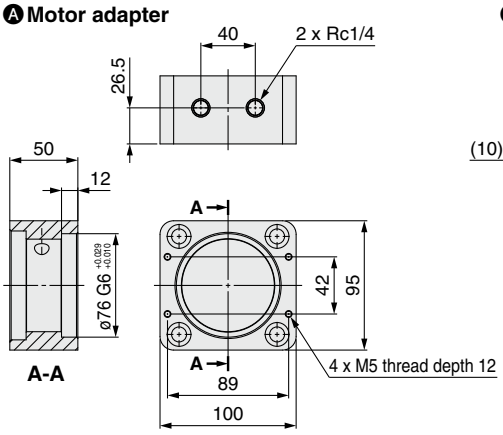

Ⓑ Motor flange (Mounting type NZ□)

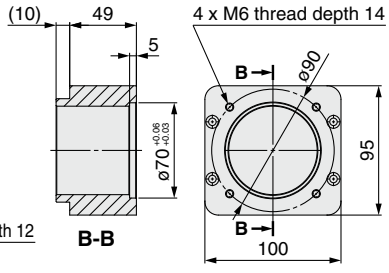

Ⓑ Motor flange (Mounting type NG□)

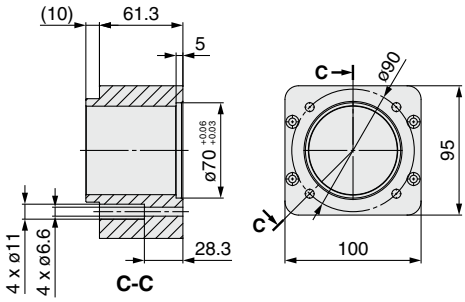

Ⓒ Coupling

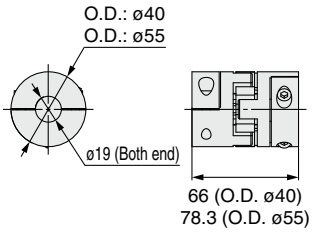

Ⓓ Reducer (Reduction ratio 1:3/1:5)

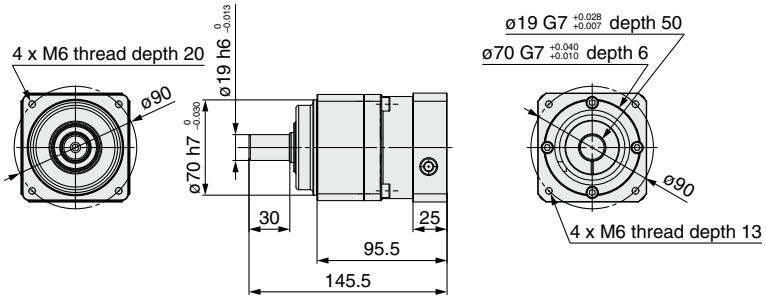

Motor Flange Assembly

Motor mounting position: Parallel

Motor flange **LEY − MF 100 P − NG**

❶

❶ Motor flange type

Symbol	Motor type	Component parts							
		A. Return box	B. Return plate	C. Pulley		D. Timing belt	Ⓔ Motor flange	F. Reducer	
				Actuator side	Motor side			Reduction ratio 1/3	Reduction ratio 1/5
NG	Mounting type G	●	●	●	●	●	●	—	—
NG3	Mounting type G + With reducer*	●	●	●	●	●	●	●	—
NG5	Mounting type G + With reducer*	●	●	●	●	●	●	—	●
N	Without motor flange	●	●	●	△	●	△	△	

* The parts marked with a ● are component parts. The parts marked with a △ should be prepared by the customer as necessary.
* Component parts come with mounting screws.
* The motor mounting screws should be provided by the customer.

Ⓔ Motor flange

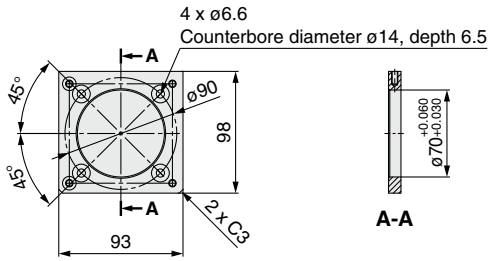

Mounting Bracket

LEY − L 100

❶

❶ Mounting bracket

Symbol	Mounting bracket
L	Foot bracket (in-line)
H	Foot bracket
F	Flange
D	Double clevis

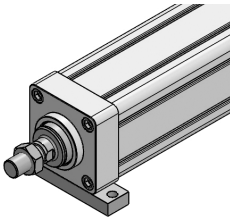

L: Foot bracket

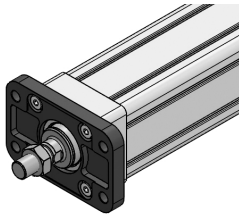

F: Flange

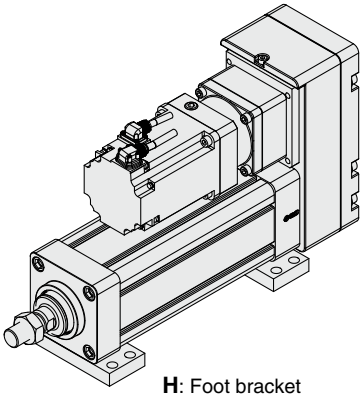

H: Foot bracket

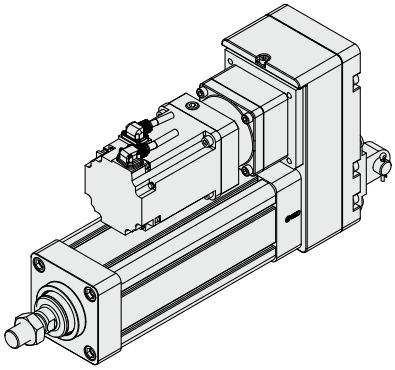

D: Double clevis

Model Selection

LEYG Series ▶ p. 173

Moment Load Graph

The model selection method shown below corresponds to SMC's standard motor.
For use in combination with a motor from a different manufacturer, check the available product information of the motor to be used.

Selection Conditions

		Vertical	Horizontal	
Mounting orientation		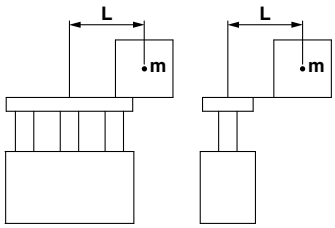	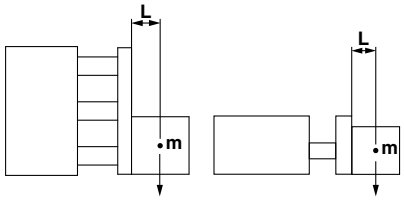	
Max. speed [mm/s]		"Speed–Vertical Work Load Graph"	200 or less	Over 200
Bearing	Sliding bearing	Graph ①, ②	Graph ⑤, ⑥*1	Graph ⑦, ⑧
	Ball bushing bearing	Graph ③, ④	Graph ⑨, ⑩	Graph ⑪, ⑫

*1 For the sliding bearing type, the speed is restricted with a horizontal/moment load.

Vertical Mounting, Sliding Bearing

① **70 mm stroke or less**

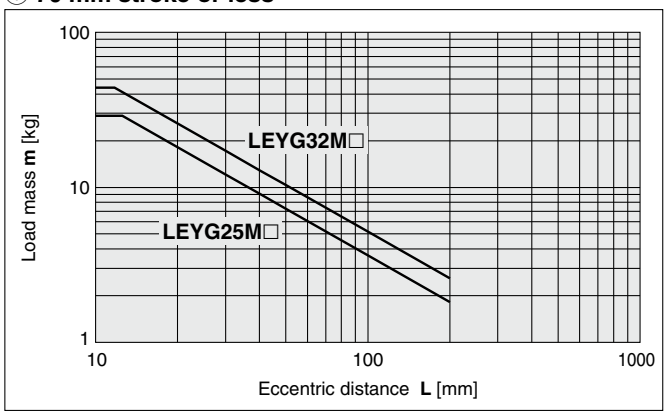

② **Over 75 mm stroke**

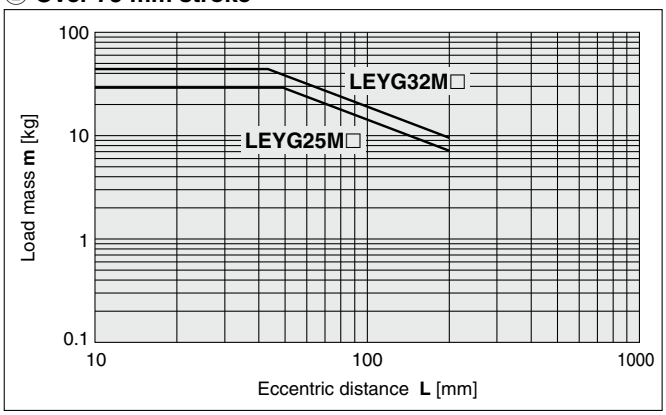

* The limit of vertical load mass varies depending on "lead" and "speed."
Check the "Speed–Vertical Work Load Graph" on page 171.

Vertical Mounting, Ball Bushing Bearing

③ **35 mm stroke or less**

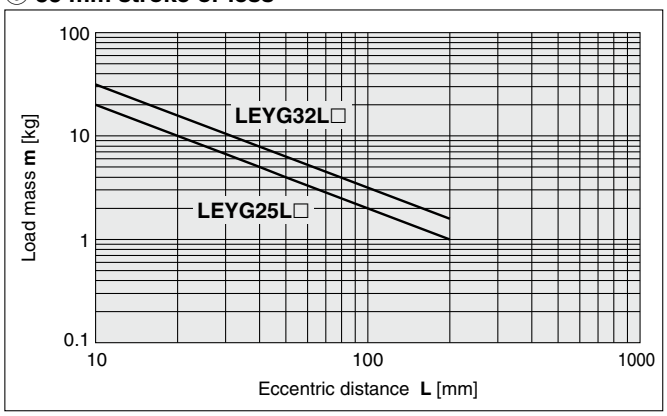

④ **Over 40 mm stroke**

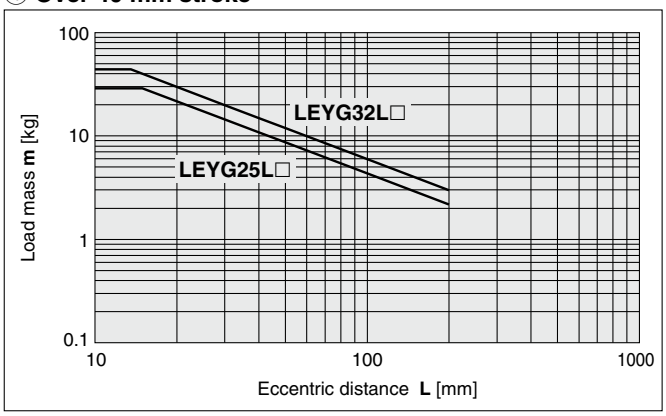

* The limit of vertical load mass varies depending on "lead" and "speed."
Check the "Speed–Vertical Work Load Graph" on page 171.

Moment Load Graph

Horizontal Mounting, Sliding Bearing

⑤ **L = 50 mm Max. speed = 200 mm/s or less**

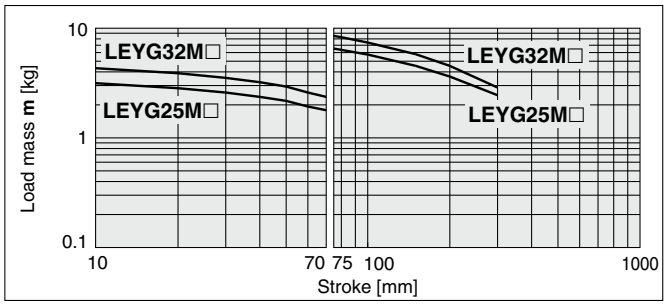

⑥ **L = 100 mm Max. speed = 200 mm/s or less**

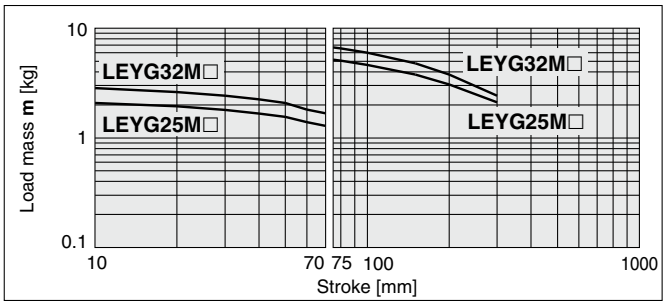

⑦ **L = 50 mm Max. speed = Over 200 mm/s**

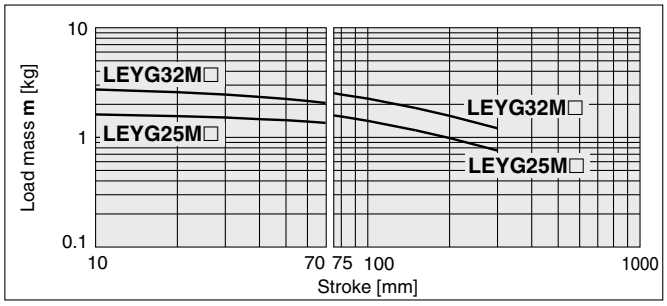

⑧ **L = 100 mm Max. speed = Over 200 mm/s**

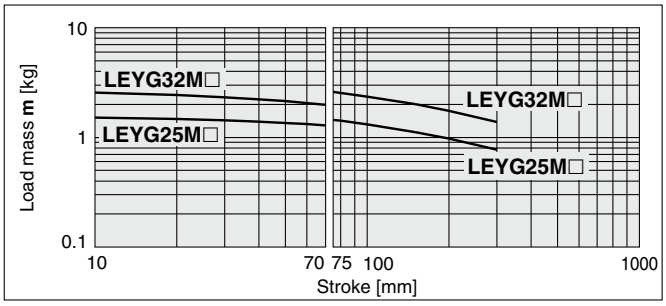

Horizontal Mounting, Ball Bushing Bearing

⑨ **L = 50 mm Max. speed = 200 mm/s or less**

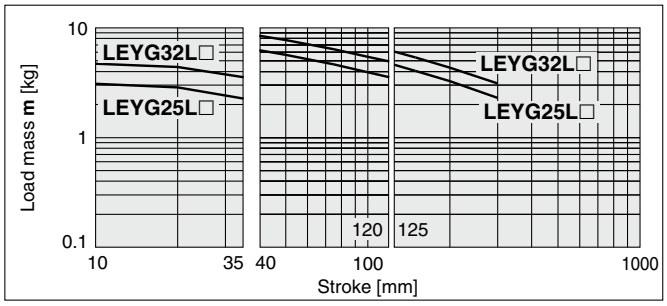

⑩ **L = 100 mm Max. speed = 200 mm/s or less**

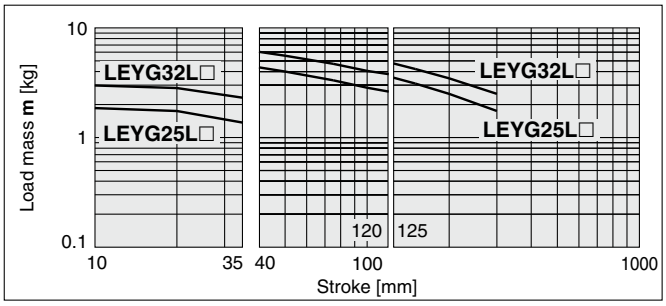

⑪ **L = 50 mm Max. speed = Over 200 mm/s**

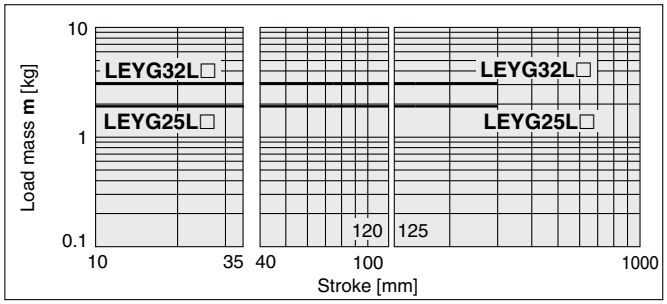

⑫ **L = 100 mm Max. speed = Over 200 mm/s**

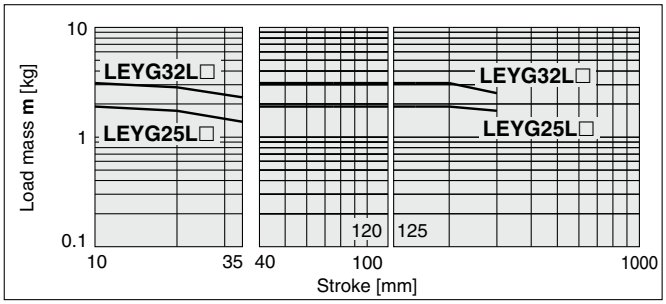

Operating Range when Used as a Stopper

LEYG□M (Sliding bearing)

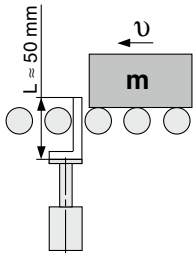

⚠Caution

Handling Precautions

- When used as a stopper, select a model with a stroke of 30 mm or less.
- LEYG□L (ball bushing bearing) cannot be used as a stopper.
- Workpiece collision in series with guide rod cannot be permitted (**Fig. a**).
- The body should not be mounted on the end. It must be mounted on the top or bottom (**Fig. b**).

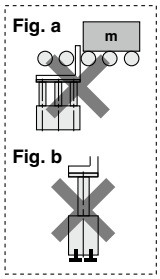

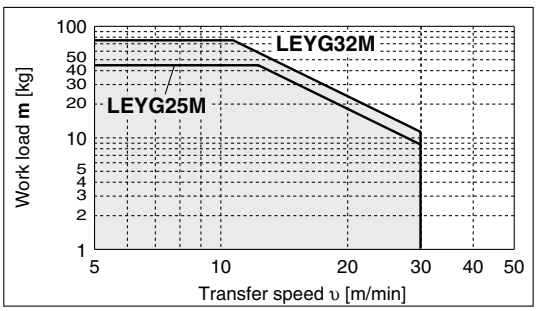

Speed–Vertical Work Load Graph

∗ These graphs show the work load when the external guide is used together. When using the LEYG alone, refer to pages 169 and 170.
∗ The values shown below are allowable values of the actuator body. Do not use the actuator so that it exceeds these specification ranges.

LEYG25□ (Motor mounting position: Parallel/In-line)

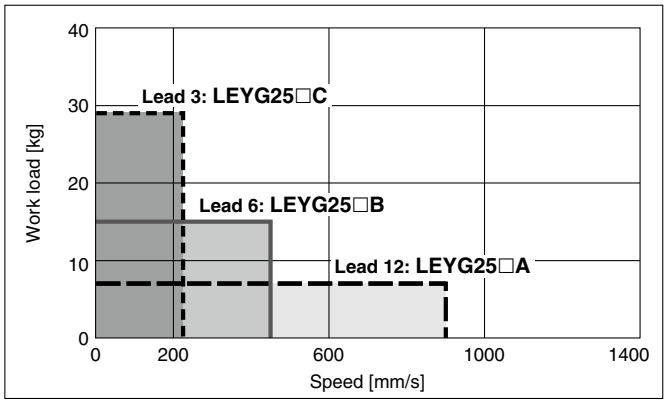

LEYG32□ (Motor mounting position: Parallel)

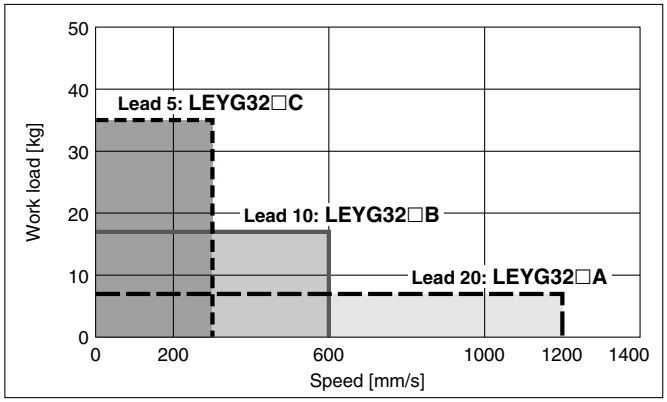

LEYG32D (Motor mounting position: In-line)

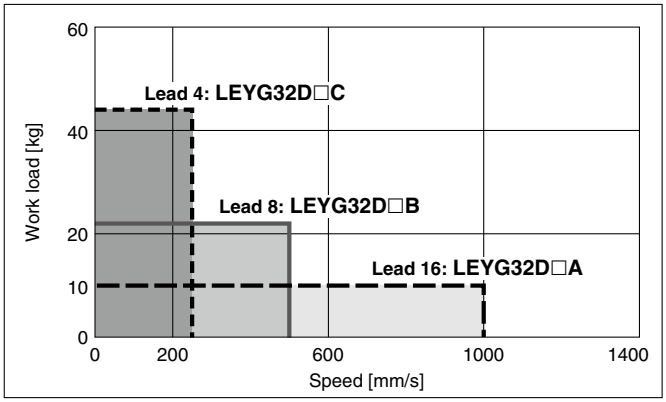

Speed–Horizontal Work Load Graph

∗ These graphs show the work load when the external guide is used together. When using the LEYG alone, refer to pages 169 and 170.

LEYG25□ (Motor mounting position: Parallel/In-line)

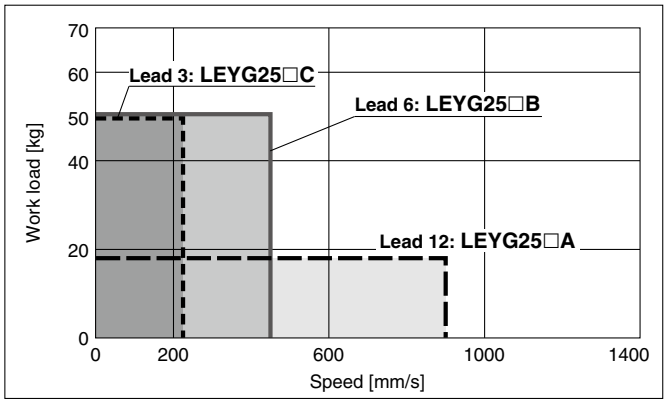

LEYG32□ (Motor mounting position: Parallel)

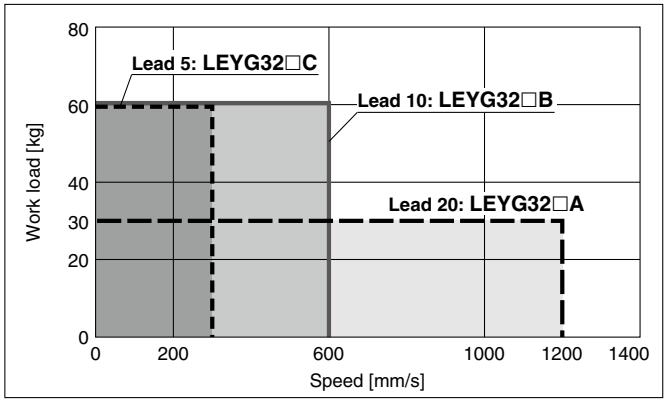

LEYG32D (Motor mounting position: In-line)

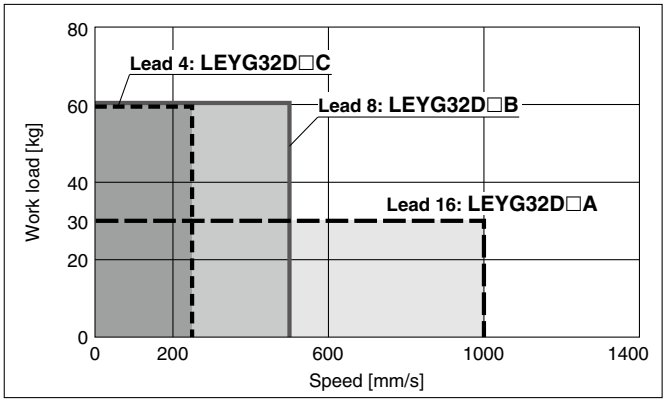

Force Conversion Graph

∗ These graphs show an example of when the standard motor is mounted. Calculate the force based on used motor and driver.

LEYG25□ (Motor mounting position: Parallel/In-line)

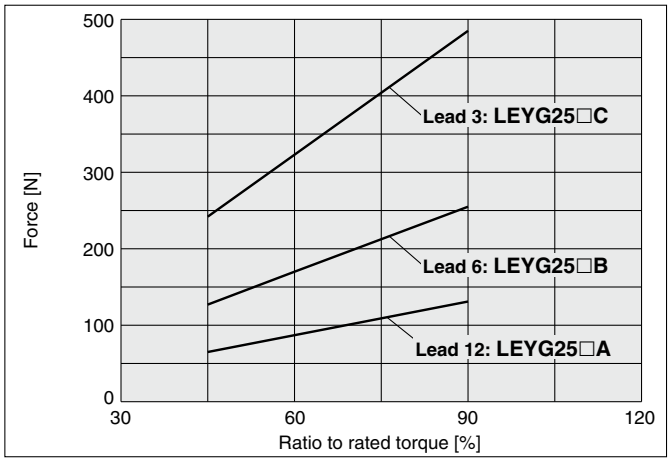

LEYG32□ (Motor mounting position: Parallel)

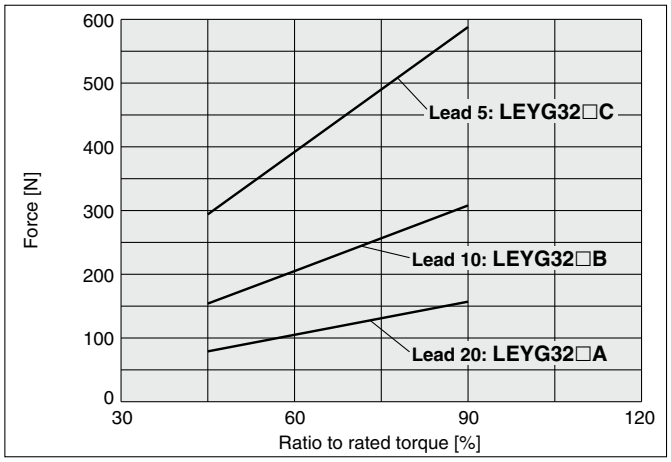

LEYG32D (Motor mounting position: In-line)

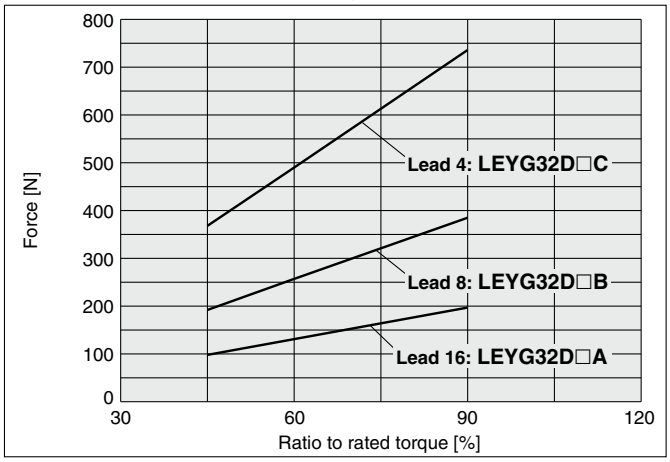

∗ When using the force control or speed control, set the maximum value to be no more than 90% of the rated torque.

Motorless Type

Electric Actuator Guide Rod Type

LEYG Series LEYG25, 32

RoHS

How to Order

LEY H G 25 M ☐ NZ B – 200 ☐

❶ ❷ ❸ ❹ ❺ ❻ ❼ ❽

❶ Accuracy

Nil	Basic type
H	High-precision type

❷ Size

25
32

❸ Bearing type

M	Sliding bearing
L	Ball bushing bearing

❹ Motor mounting position

Nil	Top side parallel
D	In-line

❺ Mounting type

NZ
NY
NX
NW
NV
NU
NT
NM1
NM2
NM3

∗ Refer to the "Compatible Motors."

❻ Lead [mm]

Symbol	LEYG25	LEYG32∗1
A	12	16 (20)
B	6	8 (10)
C	3	4 (5)

∗1 The values shown in ( ) are the leads for the size 32 top side parallel motor type. Except mounting type NM1 (Equivalent leads which include the pulley ratio [1.25:1])

❼ Stroke [mm]

30	30
to	to
300	300

∗ Refer to the applicable stroke table.

❽ Guide option

Nil	Without option
F	With grease retaining function

∗ Only available for sliding bearing

Applicable Stroke Table

●: Standard

Model \ Stroke [mm]	30	50	100	150	200	250	300	Manufacturable stroke range
LEYG25	●	●	●	●	●	●	●	15 to 300
LEYG32	●	●	●	●	●	●	●	20 to 300

∗ Please contact SMC for non-standard strokes as they are produced as special orders.

Use of auto switches for the guide rod type LEYG series

- Auto switches must be inserted from the front side with the rod (plate) sticking out.
- Auto switches cannot be fixed with the parts hidden behind the guide attachment (the side of the rod that sticks out).
- Please contact SMC when using auto switches on the side of the rod that sticks out, as it is produced as a special order.

For auto switches, refer to pages 189 to 192.

Compatible Motors and Mounting Types∗4

Applicable motor model		Size/Mounting type														
		25						32								
Manufacturer	Series	NZ	NY	NX	NM1	NM2	NM3	NZ	NY	NX	NW	NV	NU	NT	NM1	NM2
Mitsubishi Electric Corporation	MELSERVO JN/J4/J5	●	—	—	—	—	—	●	—	—	—	—	—	—	—	—
YASKAWA Electric Corporation	Σ-V/7/X	●∗3	—	—	—	—	—	●	—	—	—	—	—	—	—	—
SANYO DENKI CO., LTD.	SANMOTION R	●	—	—	—	—	—	●	—	—	—	—	—	—	—	—
OMRON Corporation	OMNUC G5/1S	●	—	—	—	—	—	—	●	—	—	—	—	—	—	—
Panasonic Corporation	MINAS A5/A6	● (MHMF only)	●	—	—	—	—	—	●	—	—	—	—	—	—	—
FANUC CORPORATION	βis (-B)	●	—	—	—	—	—	● (β1 only)	—	—	●	—	—	—	—	—
NIDEC SANKYO CORPORATION	S-FLAG	●	—	—	—	—	—	●	—	—	—	—	—	—	—	—
KEYENCE CORPORATION	SV/SV2	●∗3	—	—	—	—	—	●	—	—	—	—	—	—	—	—
FUJI ELECTRIC CO., LTD.	ALPHA7	●	—	—	—	—	—	●	—	—	—	—	—	—	—	—
MinebeaMitsumi Inc.	Hybrid stepping motors	—	—	—	●∗1	—	●∗2	—	—	—	—	—	—	—	●	—
Shinano Kenshi Co., Ltd.	CSB-BZ	—	—	—	●∗1	—	●∗2	—	—	—	—	—	—	—	—	—
ORIENTAL MOTOR Co., Ltd.	α STEP AR/AZ	—	—	—	—	● AR/AZ (46 only)	—	—	—	—	—	—	—	—	—	●
FASTECH Co., Ltd.	Ezi-SERVO	—	—	—	●	—	—	—	—	—	—	—	—	—	●	—
Rockwell Automation, Inc. (Allen-Bradley)	Kinetix MP/VP/TL	● (TL only)	—	—	—	—	—	—	—	●∗1 (MP/VP only)	—	—	—	● (TL only)	—	—
Beckhoff Automation GmbH	AM 30/31/80/81	●	—	—	—	—	—	—	—	●∗1 (AM80/AM81 only)	—	●∗1 (AM30 only)	● (AM31 only)	—	—	—
Siemens AG	SIMOTICS S-1FK7	—	—	●	—	—	—	—	—	●∗1	—	—	—	—	—	—
Delta Electronics, Inc.	ASDA-A2	●	—	—	—	—	—	●	—	—	—	—	—	—	—	—
ANCA Motion	AMD2000	●	—	—	—	—	—	●	—	—	—	—	—	—	—	—

∗1 Motor mounting position: In-line only ∗2 Motor mounting position: Parallel only
∗3 For some motors, the connector may protrude from the motor body. Be sure to check for interference with the mounting surface before selecting a motor.
∗4 The compatible motors and mounting types are typical examples. Select the mounting type after referring to the "Motor Mounting, Applicable Motor Dimensions" tables on the following "Dimensions" pages.

Specifications

- Values in this specifications table are the allowable values of the actuator body with the standard motor mounted.
- Do not use the actuator so that it exceeds these values.

Model			LEYG25$^{M}_{L}$ (Parallel) LEYG25$^{M}_{L}$D (In-line)			LEYG32$^{M}_{L}$ (Parallel)			LEYG32$^{M}_{L}$D (In-line)		
Actuator specifications	Work load [kg]	Horizontal*1	18	50	50	30	60	60	30	60	60
		Vertical	7	15	29	7	17	35	10	22	44
	Force [N]*2 (Set value: Rated torque 30 to 90%)		65 to 131	127 to 255	242 to 485	79 to 157	154 to 308	294 to 588	98 to 197	192 to 385	368 to 736
	Max. speed [mm/s]		900	450	225	1200	600	300	1000	500	250
	Pushing speed [mm/s]*3		35 or less			30 or less					
	Max. acceleration/deceleration [mm/s²]		5000								
	Positioning repeatability [mm]	Basic type	±0.02								
		High-precision type	±0.01								
	Lost motion*4 [mm]	Basic type	0.1 or less								
		High-precision type	0.05 or less								
	Ball screw specifications	Thread size [mm]	ø10			ø12					
		Lead [mm] *8 (including pulley ratio 1.25:1)	12	6	3	16 (20)*8	8 (10)*8	4 (5)*8	16	8	4
		Shaft length [mm]	Stroke + 93.5			Stroke + 104.5					
	Impact/Vibration resistance [m/s²]*5		50/20								
	Actuation type		Ball screw + Belt (LEY□) Ball screw (LEY□D)			Ball screw + Belt [Pulley ratio 1.25:1]			Ball screw		
	Guide type		Sliding bearing (LEYG□M), Ball bushing bearing (LEYG□L)								
	Operating temperature range [°C]		5 to 40								
	Operating humidity range [%RH]		90 or less (No condensation)								
	Enclosure		IP40 (Excludes motor mounting part)								
Other specifications *6	Actuation unit weight [kg] (* [ST]: Stroke)	Sliding bearing LEYG□M	0.29 + (2.20 x 10⁻³) x [ST]: 185 st or less 0.34 + (1.92 x 10⁻³) x [ST]: Over 185 st			0.48 + (2.91 x 10⁻³) x [ST]: 180 st or less 0.55 + (2.62 x 10⁻³) x [ST]: Over 180 st					
		Ball bushing bearing LEYG□L	0.33 + (1.69 x 10⁻³) x [ST]: 110 st or less 0.36 + (1.80 x 10⁻³) x [ST]: Over 110 st			0.50 + (2.40 x 10⁻³) x [ST]: 110 st or less 0.55 + (2.51 x 10⁻³) x [ST]: Over 110 st					
	Other inertia [kg·cm²]		0.012 (LEYG25) 0.015 (LEYG25D)			0.035 (LEYG32)			0.061 (LEYG32D)		
	Friction coefficient		0.05								
	Mechanical efficiency		0.8								
Reference motor spec. *7	Motor type		AC servo motor								
	Rated output capacity [W]		100			200					
	Rated torque [N·m]		0.32			0.64					

*1 This is the maximum value of the horizontal work load. An external guide is necessary to support the load (Friction coefficient of guide: 0.1 or less). The actual work load changes according to the condition of the external guide. Confirm the load using the actual device.
*2 The force setting range for the force control (Speed control mode, Torque control mode)
The force changes according to the set value. Set it with reference to the "Force Conversion Graph" on page 172.
*3 The allowable collision speed for collision with the workpiece
*4 A reference value for correcting errors in reciprocal operation
*5 Impact resistance: No malfunction occurred when the actuator was tested with a drop tester in both an axial direction and a perpendicular direction to the lead screw. (The test was performed with the actuator in the initial state.)
Vibration resistance: No malfunction occurred in a test ranging between 45 to 2000 Hz. The test was performed in both an axial direction and a perpendicular direction to the lead screw. (The test was performed with the actuator in the initial state.)
*6 Each value is only to be used as a guide to select a motor of the appropriate capacity.
*7 For other specifications, refer to the specifications of the motor that is to be installed.

Weight

Product Weight

[kg]

Model	LEYG25$^{M}_{L}$ (Motor mounting position: Parallel)							LEYG32$^{M}_{L}$ (Motor mounting position: Parallel)						
Stroke [mm]	30	50	100	150	200	250	300	30	50	100	150	200	250	300
Sliding bearing LEYG□M	1.3	1.5	1.8	2.2	2.6	2.9	3.2	2.2	2.5	3.1	3.8	4.4	4.8	5.3
Ball bushing bearing LEYG□L	1.3	1.5	1.8	2.2	2.5	2.8	3.0	2.2	2.5	2.9	3.6	4.1	4.6	5.0

Model	LEYG25$^{M}_{L}$D (Motor mounting position: In-line)							LEYG32$^{M}_{L}$D (Motor mounting position: In-line)						
Stroke [mm]	30	50	100	150	200	250	300	30	50	100	150	200	250	300
Sliding bearing LEYG□M	1.3	1.5	1.8	2.3	2.6	2.9	3.2	2.3	2.5	3.1	3.8	4.4	4.9	5.3
Ball bushing bearing LEYG□L	1.3	1.6	1.8	2.2	2.5	2.8	3.0	2.3	2.5	2.9	3.7	4.1	4.6	5.0

Dimensions: Top Side Parallel Motor

Refer to the "Motor Mounting" on page 177 for details about motor mounting and included parts.

LEYG25, 32

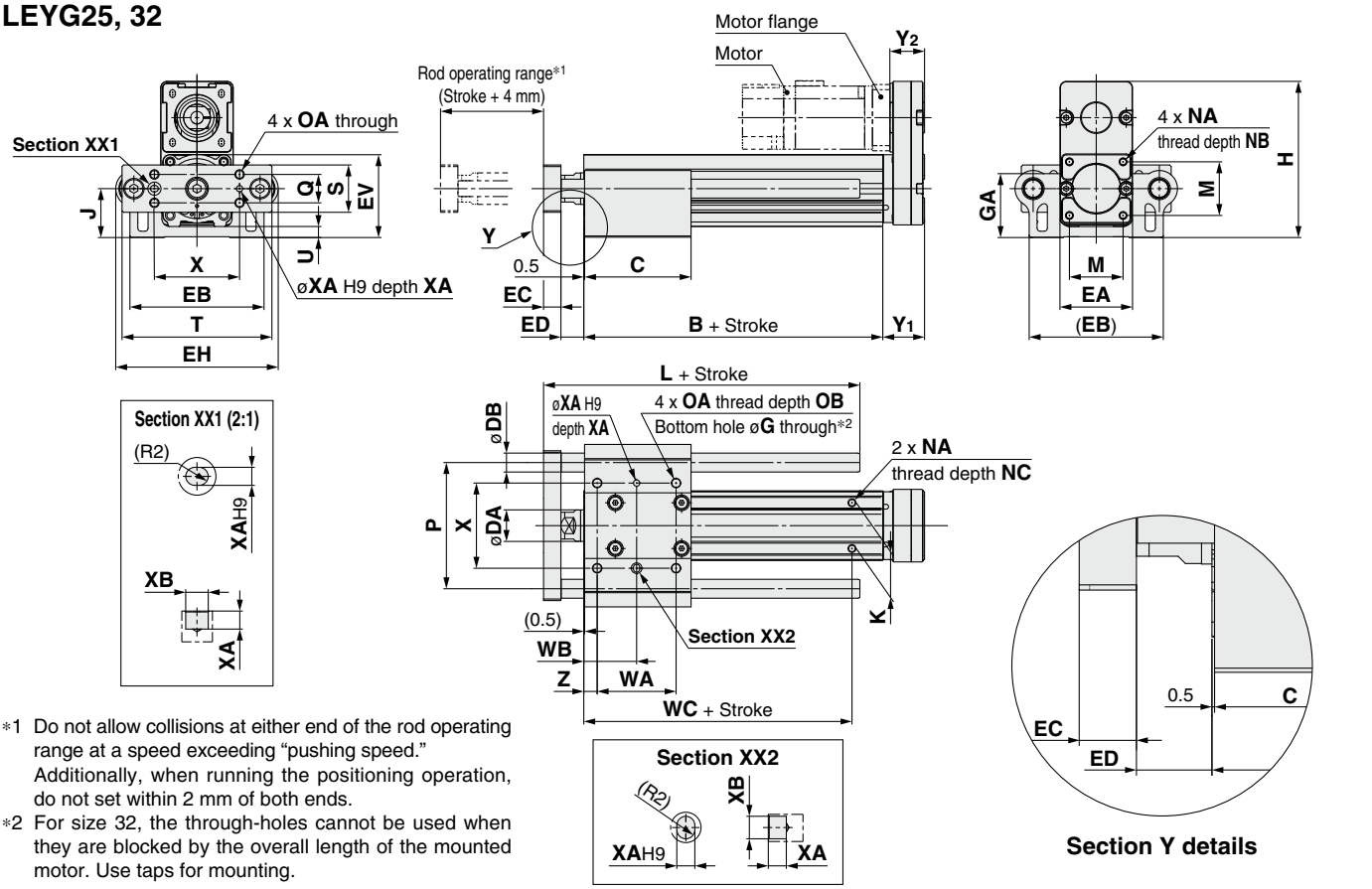

*1 Do not allow collisions at either end of the rod operating range at a speed exceeding "pushing speed." Additionally, when running the positioning operation, do not set within 2 mm of both ends.

*2 For size 32, the through-holes cannot be used when they are blocked by the overall length of the mounted motor. Use taps for mounting.

LEYG□L (Ball bushing bearing) [mm]

Size	Stroke range [mm]	L	DB
25	30 to 110	91	10
	115 to 190	115	
	195 to 300	133	
32	30 to 110	97.5	13
	115 to 190	116.5	
	195 to 300	134	

LEYG□M (Sliding bearing) [mm]

Size	Stroke range [mm]	L	DB
25	30 to 55	67.5	12
	60 to 185	100.5	
	190 to 300	138	
32	30 to 50	74	16
	55 to 180	107	
	185 to 300	144	

* The motor mounting and applicable motor dimensions are the same as those of the LEY series. Refer to page 177.

LEYG□M, LEYG□L Common [mm]

Size	Stroke range [mm]	B	C	DA	EA	EB	EH	EV	EC	ED	G	GA	H	J	K	M	NA	NB
25	30 to 35	89.5	50	20	46	85	103	52.3	11	12.5	5.4	40.3	98.8	30.8	29	34	M5 x 0.8	8
	40 to 100		67.5															
	105 to 120	114.5																
	125 to 200		84.5															
	205 to 300		102															
32	30 to 35	96	55	25	60	101	123	63.8	12	16.5	5.4	50.3	125.3	38.3	30	40	M6 x 1.0	10
	40 to 100		68															
	105 to 120	126																
	125 to 200		85															
	205 to 300		102															

Size	Stroke range [mm]	NC	OA	OB	P	Q	S	T	U	WA	WB	WC	X	XA	XB	Y1	Y2	Z
25	30 to 35	6.5	M6 x 1.0	12	80	18	30	95	6.8	35	26	70	54	4	5	26.5	22	8.5
	40 to 100									50	33.5							
	105 to 120											95						
	125 to 200									70	43.5							
	205 to 300									85	51							
32	30 to 35	8.5	M6 x 1.0	12	95	28	40	117	7.3	40	28.5	75	64	5	6	34	27	8.5
	40 to 100									50	33.5							
	105 to 120											105						
	125 to 200									70	43.5							
	205 to 300									85	51							

* The ED measurement is when the unit is at the retracted stroke end position.

Refer to the "Motor Mounting" on page 181 for details about motor mounting and included parts.

Dimensions: In-line Motor

LEYG25, 32

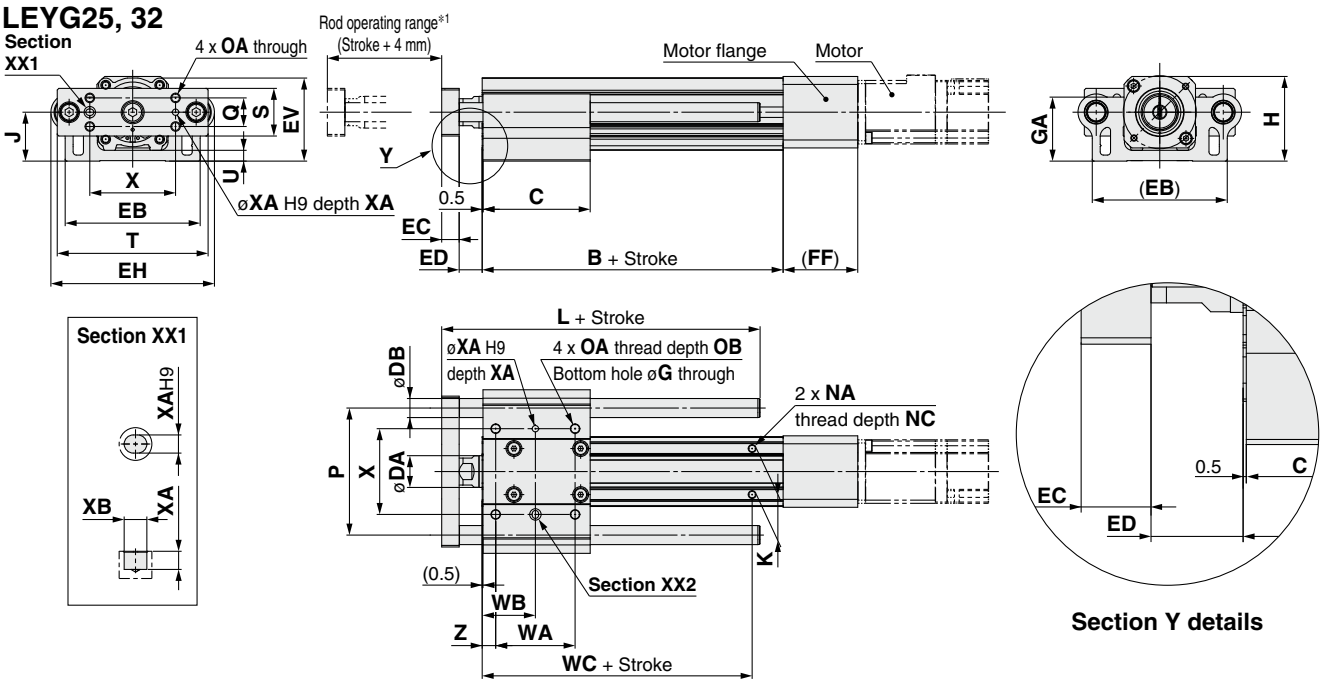

LEYG□L (Ball bushing bearing) [mm]

Size	Stroke range [mm]	L	DB
25	30 to 110	91	10
	115 to 190	115	
	195 to 300	133	
32	30 to 110	97.5	13
	115 to 190	116.5	
	195 to 300	134	

LEYG□M (Sliding bearing) [mm]

Size	Stroke range [mm]	L	DB
25	30 to 55	67.5	12
	60 to 185	100.5	
	190 to 300	138	
32	30 to 50	74	16
	55 to 180	107	
	185 to 300	144	

*1 Do not allow collisions at either end of the rod operating range at a speed exceeding "pushing speed." Additionally, when running the positioning operation, do not set within 2 mm of both ends.

* The motor mounting and applicable motor dimensions are the same as those of the LEY series. Refer to page 181.

LEYG□M, LEYG□L Common [mm]

Size	Stroke range [mm]	B	C	DA	EB	EH	EV	EC	ED	G	GA	H	J	K	NA
25	30 to 35	89.5	50	20	85	103	52.3	11	12.5	5.4	40.3	53.3	30.8	29	M5 x 0.8
	40 to 100		67.5												
	105 to 120	114.5													
	125 to 200		84.5												
	205 to 300		102												
32	30 to 35	96	55	25	101	123	63.8	12	16.5	5.4	50.3	68.3	38.3	30	M6 x 1.0
	40 to 100		68												
	105 to 120	126													
	125 to 200		85												
	205 to 300		102												

Size	Stroke range [mm]	NC	OA	OB	P	Q	S	T	U	WA	WB	WC	X	XA	XB	Z
25	30 to 35	6.5	M6 x 1.0	12	80	18	30	95	6.8	35	26	70	54	4	5	8.5
	40 to 100									50	33.5					
	105 to 120											95				
	125 to 200									70	43.5					
	205 to 300									85	51					
32	30 to 35	8.5	M6 x 1.0	12	95	28	40	117	7.3	40	28.5	75	64	5	6	8.5
	40 to 100									50	33.5					
	105 to 120											105				
	125 to 200									70	43.5					
	205 to 300									85	51					

* The ED measurement is when the unit is at the retracted stroke end position.

- The motor and motor mounting screws should be provided by the customer.
- Motor shaft type should be cylindrical for the NZ, NY, NW, NM2 mounting types, and D-cut type for the NM1 and NM3 mounting type.
- When mounting a pulley, remove all oil content, dust, and dirt adhered to the shaft and the inside of the pulley.
- Take measures to prevent the loosening of the motor mounting screws and hexagon socket head set screws.

Motor Mounting: Parallel

LEY$^{25}_{32}$, LEYG$^{25}_{32}$

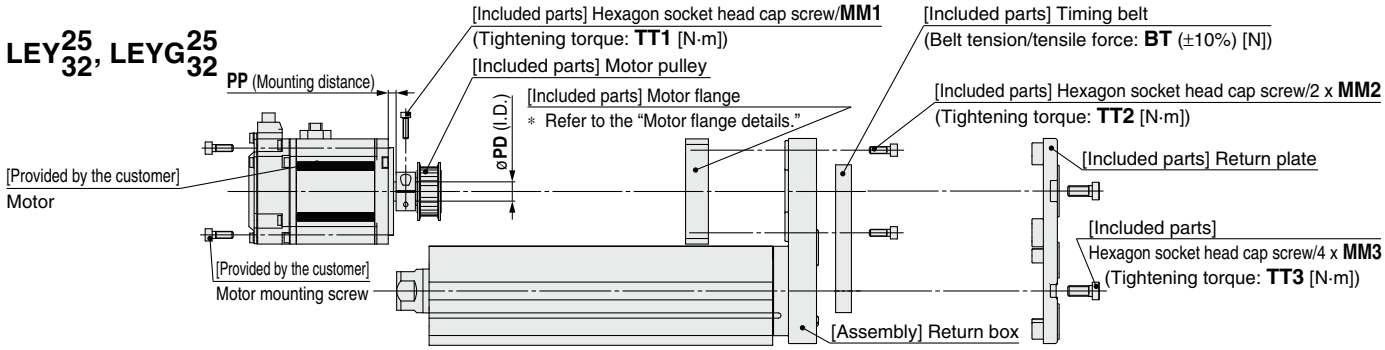

LEY25, LEYG25: NM1, NM2, NM3

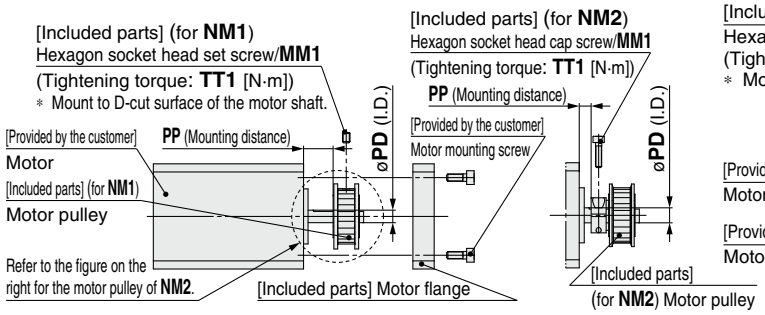

LEY32, LEYG32: NM1

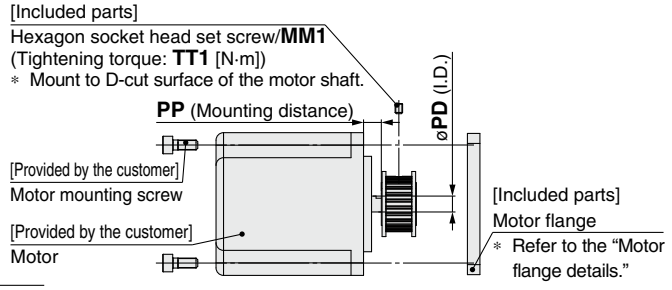

Motor flange details

LEY25: NZ, NY, NX
LEY32: NZ, NY, NW, NU, NT

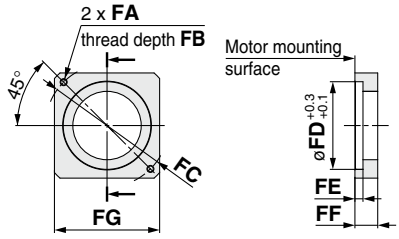

LEY25: NM1, NM2, NM3

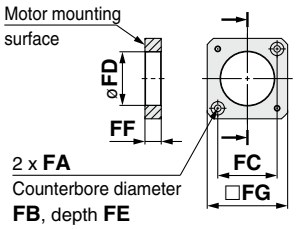

LEY32: NM1, NM2

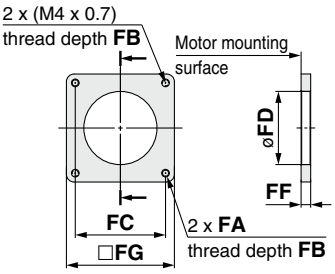

Dimensions

[mm]

Size	Mounting type	MM1	TT1	MM2	TT2	MM3	TT3	PD	PP	FA	FB	FC	FD	FE	FF	FG	BT
25	NZ	M2.5 x 10	1.0	M3 x 8	0.63	M4 x 10	1.5	8	7.5	M4 x 0.7	7.5	ø46	30	3.7	11	42	19
	NY	M2.5 x 10	1.0	M3 x 8	0.63	M4 x 10	1.5	8	7.5	M3 x 0.5	5.5	ø45	30	5	11	38	19
	NX	M2.5 x 10	1.0	M3 x 8	0.63	M4 x 10	1.5	8	4.5	M4 x 0.7	7	ø46	30	3.7	8	42	19
	NM1	M3 x 5	0.63	M3 x 8	0.63	M4 x 10	1.5	5	11.8	ø3.4	7	□31	28	3.5	8.5	42	19
	NM2	M2.5 x 10	1.0	M3 x 8	0.63	M4 x 10	1.5	6	4.8	ø3.4	7	□31	28	3.5	8.5	42	19
	NM3	M3 x 5	0.63	M3 x 8	0.63	M4 x 10	1.5	5	8.8	ø3.4	7	□31	28	3.5	5.5	42	19
32	NZ	M3 x 12	1.5	M4 x 12	1.5	M6 x 14	5.2	14	4.5	M5 x 0.8	8.5	ø70	50	4.6	13	60	30
	NY	M3 x 12	1.5	M4 x 12	1.5	M6 x 14	5.2	11	4.5	M4 x 0.7	7	ø70	50	4.6	13	60	30
	NW	M4 x 12	3.6	M4 x 12	1.5	M6 x 14	5.2	9	4.5	M5 x 0.8	8.5	ø70	50	4.6	13	60	30
	NU	M3 x 12	1.5	M4 x 12	1.5	M6 x 14	5.2	11	4.5	M5 x 0.8	8.5	ø70	50	4.6	13	60	30
	NT	M3 x 12	1.5	M4 x 12	1.5	M6 x 14	5.2	12	8.5	M5 x 0.8	8.5	ø70	50	4.6	17	60	30
	NM1	M3 x 5	0.63	M4 x 12	1.5	M6 x 14	5.2	6.35	8	M4 x 0.7	(5)	□47.1	38.2	—	5	56.4	30
	NM2	M3 x 12	1.5	M4 x 12	1.5	M6 x 14	5.2	10	3	M4 x 0.7	8	□50	38.2	—	11.5	60	30

Motor Mounting Diagram

Mounting procedure

1) Secure the motor pulley to the motor (provided by the customer) with the MM1 hexagon socket head cap screw or hexagon socket head set screw.
2) Secure the motor to the motor flange with the motor mounting screws (provided by the customer).
3) Put the timing belt on the motor pulley and body side pulley, and then secure it temporarily with the MM2 hexagon socket head cap screws. (Refer to the mounting diagram.)
4) Apply the belt tension/tensile force: BT and tighten the timing belt with the MM2 hexagon socket head cap screws. (The reference level is the elimination of the belt deflection.)
5) Secure the return plate with the MM3 hexagon socket head cap screws.

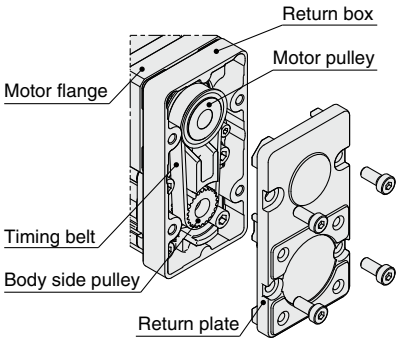

Included Parts List

Size: 25, 32

Description	Quantity	
	Mounting type	
	NZ/NY/NW/NT/NM2	NM1/NM3
Motor flange	1	1
Motor pulley	1	1
Return plate	1	1
Timing belt	1	1
Hexagon socket head cap screw (to mount the return plate)	4	4
Hexagon socket head cap screw (to mount the motor flange)	2	2
Hexagon socket head cap screw (to secure the pulley)	1	—
Hexagon socket head set screw (to secure the pulley)	—	1

Motor Mounting: Parallel

LEY63

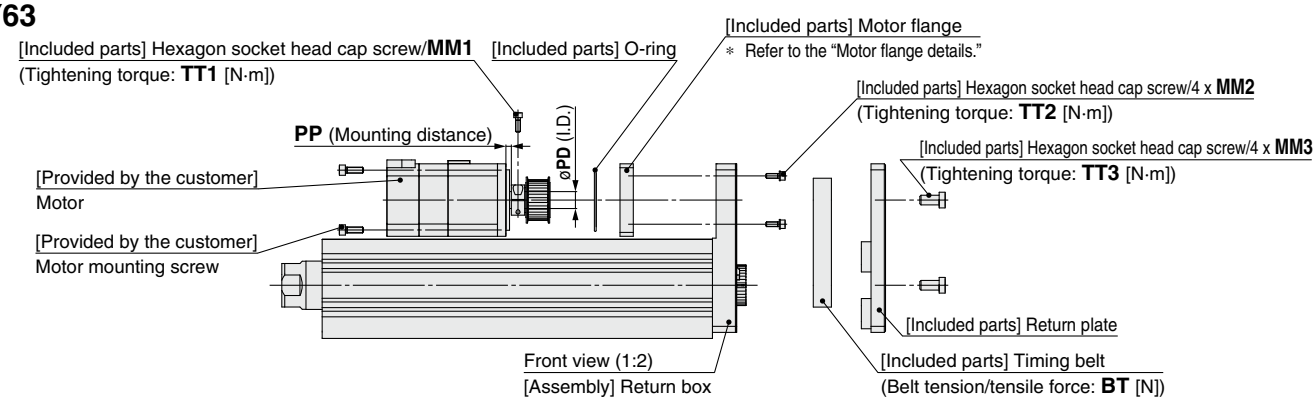

Motor flange details

LEY63: NZ, NY, NW, NT

⚠ **Be careful about the motor flange mounting direction.**

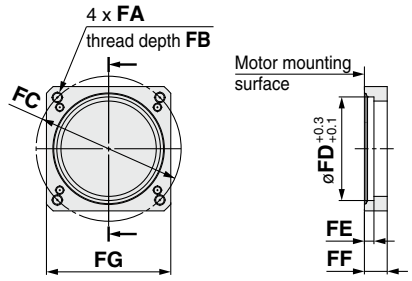

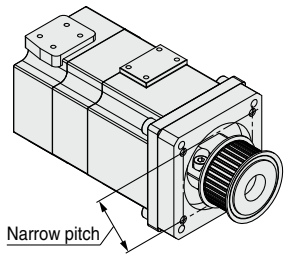

Dimensions

[mm]

Motor type	MM1	TT1	MM2	TT2	MM3	TT3	PD	PP	FA	FB	FC	FD	FE	FF	FG	BT
NZ	M4 x 12	3.6	M4 x 12	2.7	M8 x 16	12.5	14	4.5	M5 x 0.8	8.5	ø70	50	4.6	11	60	98
NY	M4 x 12	3.6	M4 x 12	2.7	M8 x 16	12.5	14	4.5	M4 x 0.7	8	ø70	50	4.6	11	60	98
NW	M4 x 12	3.6	M4 x 12	2.7	M8 x 16	12.5	9	4.5	M5 x 0.8	8.5	ø70	50	4.6	11	60	98
NT	M4 x 12	3.6	M4 x 12	2.7	M8 x 16	12.5	12	8	M5 x 0.8	8.5	ø70	50	4.6	14.5	60	98

Motor Mounting Diagram

Mounting procedure

1) Secure the motor pulley to the motor (provided by the customer) with the MM1 hexagon socket head cap screw.
2) Secure the motor to the motor flange with the motor mounting screws (provided by the customer).
3) Put the timing belt on the motor pulley and body side pulley, and then secure it temporarily with the MM2 hexagon socket head cap screws. (Refer to the mounting diagram.)
4) Apply the belt tension/tensile force: BT and tighten the timing belt with the MM2 hexagon socket head cap screws. (The reference level is the elimination of the belt deflection.)
5) Secure the return plate with the MM3 hexagon socket head cap screws.

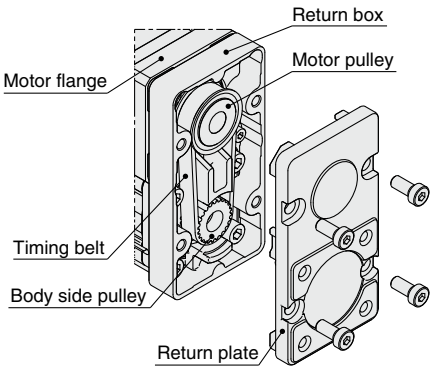

Included Parts List

Size: 63

Description	Quantity Motor type NZ/NY/NW/NT
Motor flange	1
Motor pulley	1
Return plate	1
Timing belt	1
Hexagon socket head cap screw (to mount the return plate)	4
Hexagon socket head cap screw (to mount the motor flange)	4
Hexagon socket head cap screw (to secure the pulley)	1
O-ring	1

Motor Mounting: Parallel

LEY100

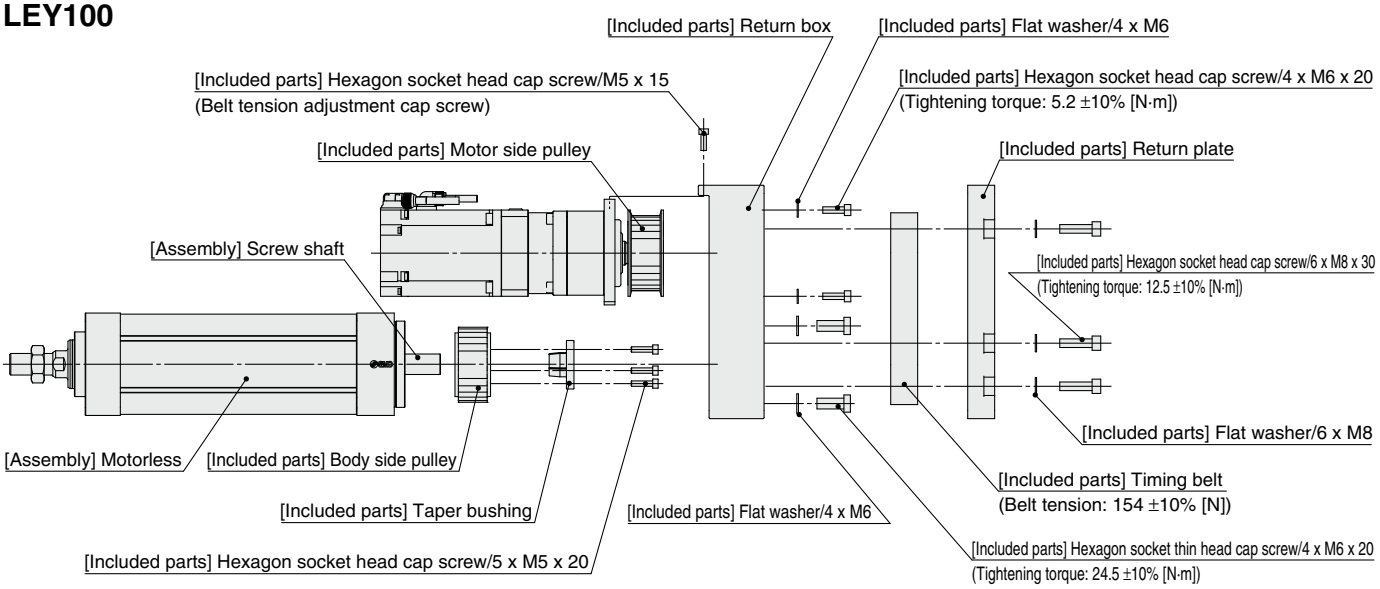

LEY-MF100P-NG

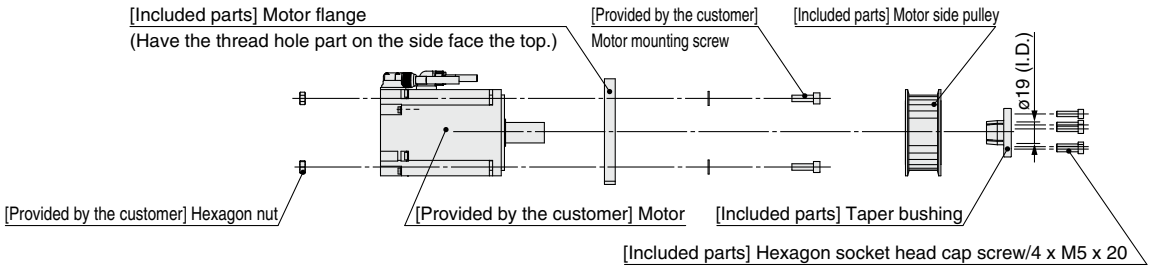

LEY-MF100P-NG3/LEY-MF100P-NG5

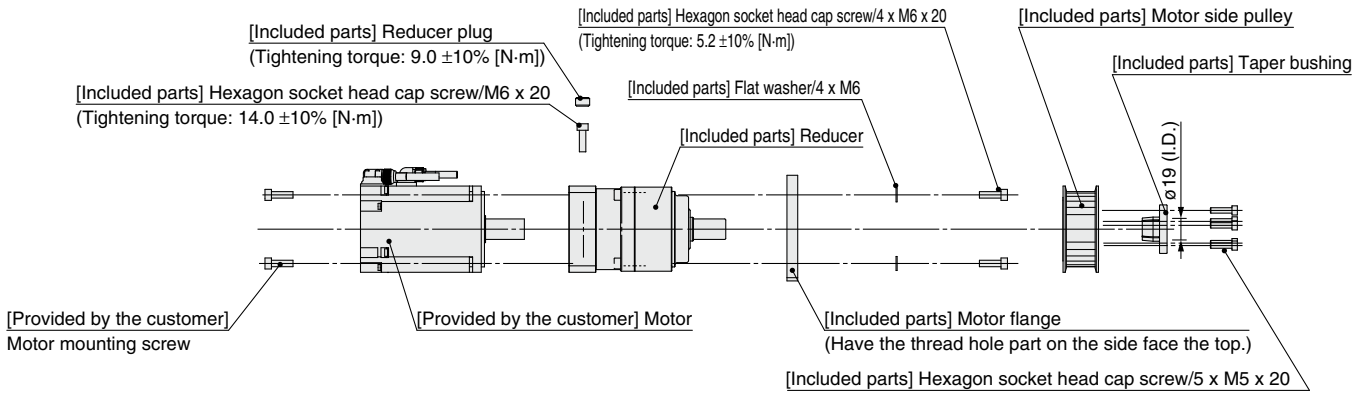

Motor Mounting: Parallel

Pulley mounting procedure

LEY100

Motor side pulley **Body side pulley**

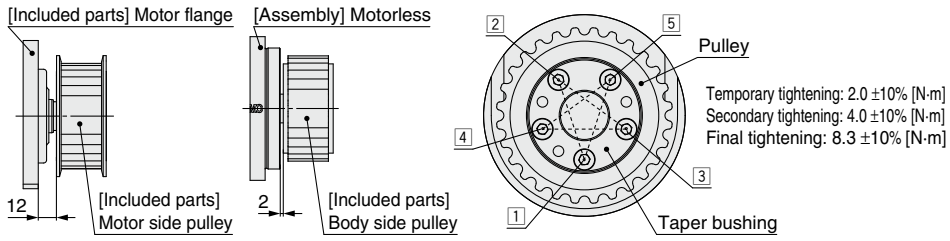

Mounting procedure

1) Loosen hexagon socket head cap screws 1 to 5 on the pulley and taper bushing.
2) Mount the pulley in the correct position.
3) **Going in order from screws 1 to 5, perform temporary tightening, secondary tightening, and then the final tightening in that order.**
4) Tighten the screw to the final tightening torque.

Mounting Diagram

Mounting procedure (LEY-MF100P-NG)

1) Secure the motor flange to the motor (provided by the customer) using the motor mounting screws (provided by the customer) and hexagon nuts (provided by the customer).
2) Secure the motor side pulley to the motor. (Refer to the pulley mounting procedure.)
3) Secure the body side pulley to the motorless screw shaft. (Refer to the pulley mounting procedure.)
4) Secure the return box to the motorless with the hexagon socket thin head cap screws.
5) Attach the timing belt to the motor pulley and body side pulley, and secure the return box to the motor adapter by temporarily tightening the hexagon socket thin head cap screws. (Refer to the mounting diagram.)
6) Secure the return box to the motor adapter with the hexagon socket head cap screw (belt tension adjustment cap screw). Then, adjust the belt tension and fully tighten the hexagon socket thin head cap screws.
7) Secure the return plate with the hexagon socket head cap screws.

Mounting procedure (LEY-MF100P-NG3/LEY-MF100P-NG5)

1) Insert the plug after securing the reducer to the motor (provided by the customer) with the M6 x 20 hexagon socket head cap screws.
2) Secure the reducer to the motor with the M6 motor mounting screws (provided by the customer).
3) Secure the motor flange to the reducer with the M6 x 20 hexagon socket head cap screws.
4) Secure the motor side pulley to the motor. (Refer to the pulley mounting procedure.)
5) Secure the body side pulley to the motorless screw shaft. (Refer to the pulley mounting procedure.)
6) Secure the return box to the motorless with the hexagon socket thin head cap screws.
7) Attach the timing belt to the motor pulley and body side pulley, and secure the return box to the motor adapter by temporarily tightening the hexagon socket thin head cap screws. (Refer to the mounting diagram.)
8) Secure the return box to the motor adapter with the hexagon socket head cap screw (belt tension adjustment cap screw). Then, adjust the belt tension and fully tighten the hexagon socket thin head cap screws.
9) Secure the return plate with the hexagon socket head cap screws.

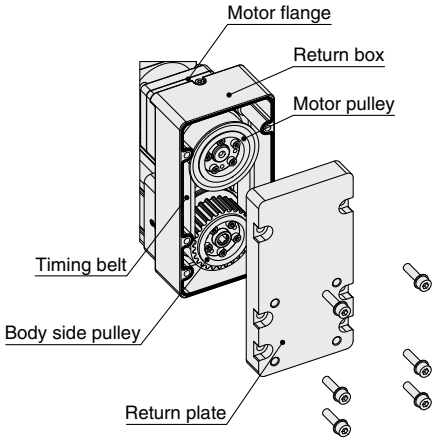

Motor flange details

LEY100

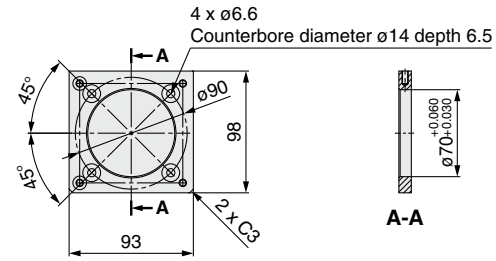

⚠Be careful about the motor flange mounting direction.

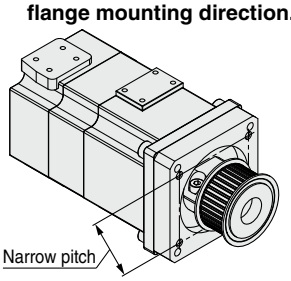

Included Parts List

Symbol	Motor type	Component parts							
		A. Return box	B. Return plate	C. Pulley		D. Timing belt	E Motor flange	F. Reducer	
				Actuator side	Motor side			Reduction ratio 1/3	Reduction ratio 1/5
NG	Mounting type G	●	●	●	●	●	●	—	—
NG3	Mounting type G + With reducer*	●	●	●	●	●	●	●	—
NG5	Mounting type G + With reducer*	●	●	●	●	●	●	—	●
N	Without motor flange	●	●	●	△	●	△	△	

* The parts marked with a ● are component parts. The parts marked with a △ should be prepared by the customer as necessary.
* Component parts come with mounting screws.
* The motor mounting screws should be provided by the customer.

Motor Mounting: In-line

- The motor and motor mounting screws should be provided by the customer.
- Motor shaft type should be cylindrical for the NZ, NY, NX, NW, NM2 mounting types, and D-cut type for the NM1 mounting type.
- When mounting a hub, remove all oil content, dust, and dirt adhered to the shaft and the inside of the hub.
- Take measures to prevent the loosening of the motor mounting screws and hexagon socket head set screws.

LEY$^{25}_{32}$D, LEYG$^{25}_{32}$□D

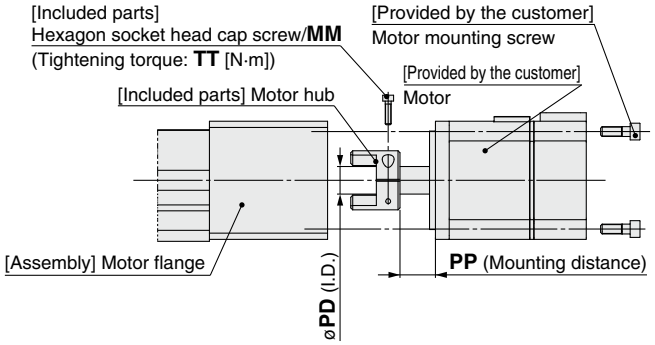

Mounting procedure

1) Secure the motor hub to the motor (provided by the customer) with the MM hexagon socket head cap screw.
2) Check the motor hub position, and then insert it. (Refer to the mounting diagram.)
3) Secure the motor to the motor flange with the motor mounting screws (provided by the customer).

LEY25D, LEYG25□D: NM1

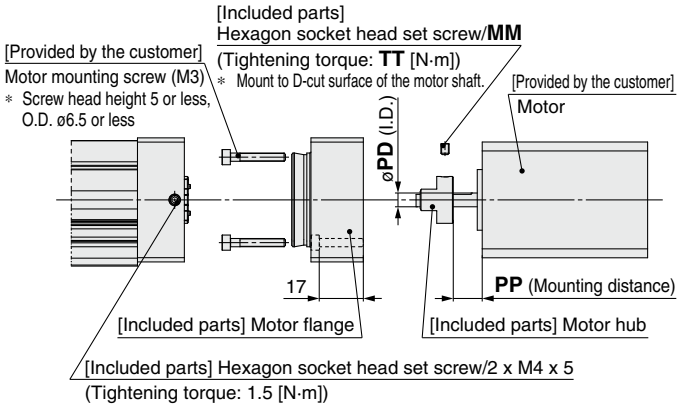

Mounting procedure

1) Secure the motor hub to the motor (provided by the customer) with the M3 x 4 hexagon socket head set screw.
2) Secure the motor to the motor flange with the motor mounting screws (provided by the customer).
3) Check the motor hub position, and then insert it. (Refer to the mounting diagram.)
4) Secure the motor flange with the M4 x 5 hexagon socket head set screws.

LEY32D, LEYG32□D: NM1

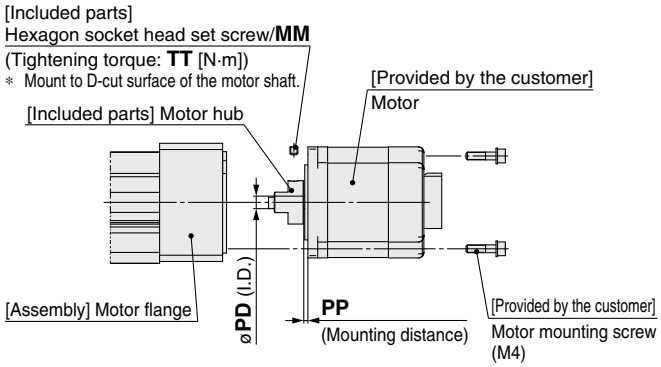

Mounting procedure

1) Secure the motor hub to the motor (provided by the customer) with the MM hexagon socket head set screw.
2) Check the motor hub position, and then insert it. (Refer to the mounting diagram.)
3) Secure the motor to the motor block with the motor mounting screws (provided by the customer).

LEY25D, LEYG25□D: NM2

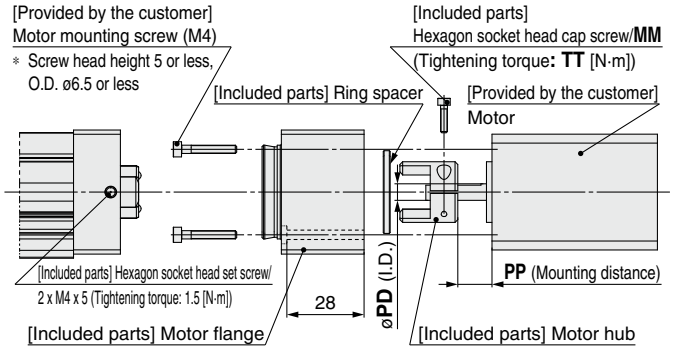

Mounting procedure

1) Insert the ring spacer into the motor (provided by the customer).
2) Secure the motor hub to the motor (provided by the customer) with the M2.5 x 10 hexagon socket head cap screw.
3) Secure the motor to the motor flange with the motor mounting screws (provided by the customer).
4) Check the motor hub position, and then insert it. (Refer to the mounting diagram.)
5) Secure the motor flange with the M4 x 5 hexagon socket head set screws.

Motor Mounting Diagram

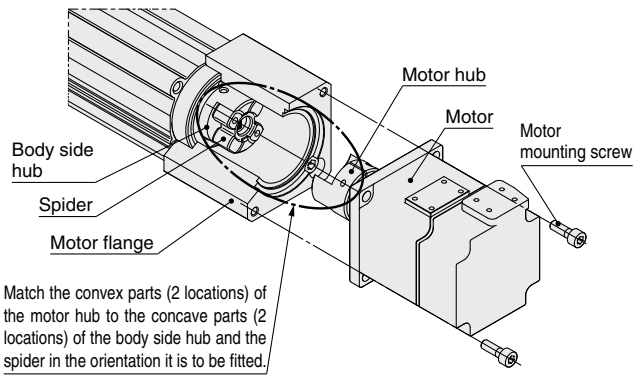

Dimensions

[mm]

Size	Mounting type	MM	TT	PD	PP
25	NZ	M2.5 x 10	1.0	8	12.5
	NY	M2.5 x 10	1.0	8	12.5
	NX	M2.5 x 10	1.0	8	7
	NM1	M3 x 5	0.63	5	10.5
	NM2	M2.5 x 10	1.0	6	12.4
32	NZ	M3 x 12	1.5	14	18
	NY	M4 x 12	3.6	11	18
	NX	M4 x 12	3.6	9	5
	NW	M4 x 12	3.6	9	12
	NV	M4 x 12	3.6	9	5
	NU	M4 x 12	3.6	11	12
	NT	M3 x 12	1.5	12	18
	NM1	M4 x 5	1.5	6.35	2.1
	NM2	M4 x 12	3.6	10	12

Included Parts List

Size: 25

Description	Quantity		
	Mounting type		
	NZ/NY/NX	NM1	NM2
Motor hub	1	1	1
Hexagon socket head cap screw (to secure the hub)	1	—	1
Motor flange	—	1	1
Hexagon socket head set screw (to secure the hub)	—	1	—
Hexagon socket head set screw (to secure the motor flange)		2	2
Ring spacer	—	—	1

Size: 32

Description	Quantity	
	Mounting type	
	NZ/NY/NX/NW/NV/NU/NT/NM2	NM1
Motor hub	1	1
Hexagon socket head cap screw (to secure the hub)	1	—
Hexagon socket head set screw (to secure the hub)	—	1

Motor Mounting: In-line

- The motor and motor mounting screws should be provided by the customer.
- Prepare a motor with a round shaft end.
- When mounting a hub, remove all oil content, dust, and dirt adhered to the shaft and the inside of the hub.
- Take measures to prevent the loosening of the motor mounting screws.

LEY63D

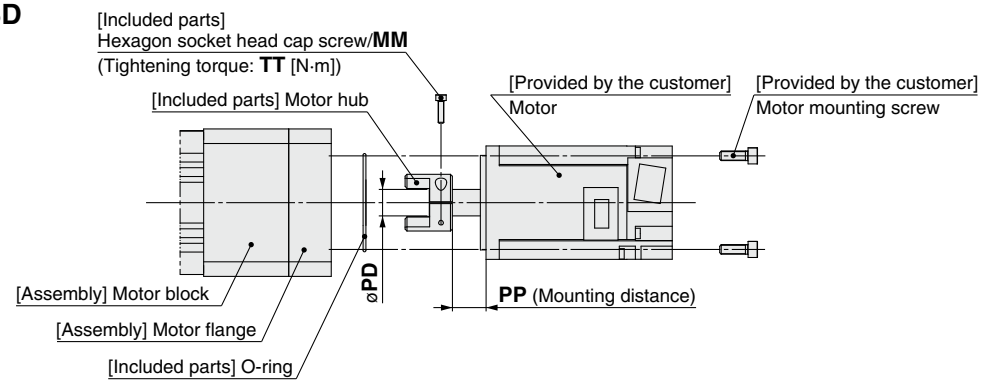

Motor Mounting Diagram

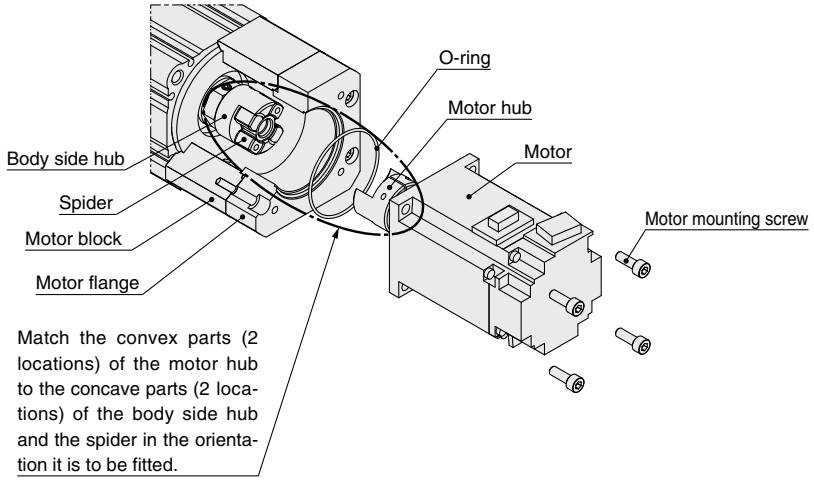

Mounting procedure

1) Secure the motor hub to the motor (provided by the customer) with the MM hexagon socket head cap screw.
2) Put the O-ring on the mating part of the motor, and check the motor hub position and then insert it. (Refer to the mounting diagram.)
3) Secure the motor to the motor flange with the motor mounting screws (provided by the customer).

Dimensions

[mm]

Size	Mounting type	MM	TT	PD	PP
63	NZ	M3 x 12	1.5	14	17.7
	NY				
	NX	M4 x 12	3.6	9	6.7
	NW				11.7
	NV	M4 x 12	3.6	9	6.7
	NU	M4 x 12	3.6	11	11.7
	NT	M3 x 12	1.5	12	17.7

Included Parts List

Size: 63

Description	Quantity Mounting type NZ/NY/NX/NW/NV/NU/NT
Motor hub	1
Hexagon socket head cap screw (to secure the hub)	1
O-ring	1

Motor Mounting: In-line

LEY100D: LEY-MF100D-NZC
LEY-MF100D-NZ (Without coupling)

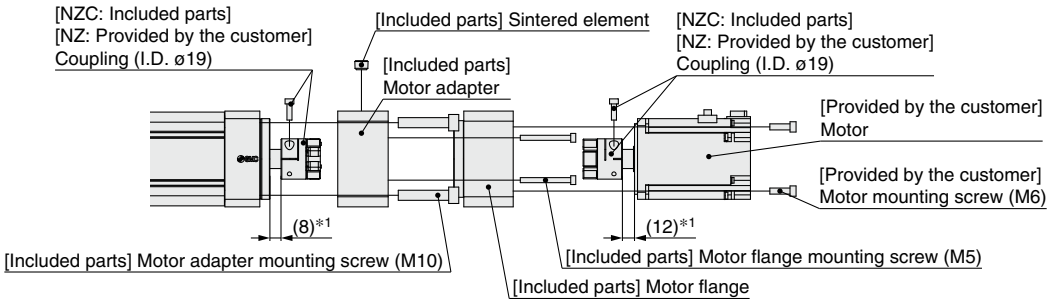

Mounting procedure
1) Separate the coupling, and attach half to the motor side and the other half to the actuator side.
2) Attach one half of the coupling to the actuator side using one of the screws included with the coupling.
3) Attach the motor adapter to the actuator using the M10 motor adapter mounting screws.
4) Attach the sintered element to the motor adapter.
5) Attach the motor flange to the motor adapter using the M5 motor flange mounting screws.
6) Attach the other half of the coupling to the motor (provided by the customer) side using the other screw included with the coupling.
7) Attach the motor to the motor flange using the M6 motor mounting screws (provided by the customer). (Align the two sides of the coupling so that they fit together.)

*1 Dimensions when mounting type "NZC" (with coupling) is selected
When option "NZ" (without coupling) is selected, attach at a suitable position taking the recommended value of the coupling (provided by the customer) as well as the motor flange dimensions into consideration.

LEY-MF100D-NGC3/5 (Reducer included)
LEY-MF100D-NGC
LEY-MF100D-NG (Without coupling)

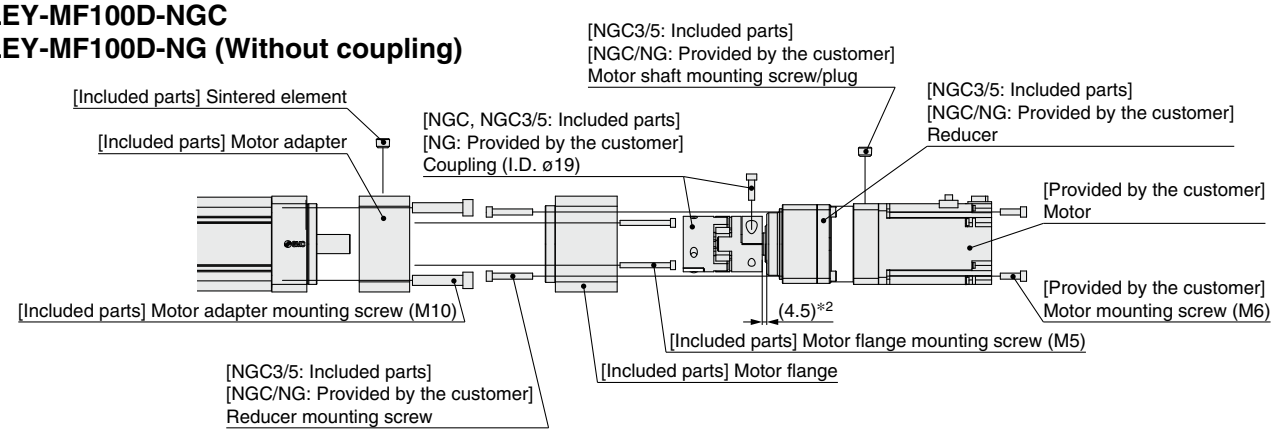

Mounting procedure
1) Attach the motor adapter to the actuator using the M10 motor adapter mounting screws.
2) Attach the coupling to the reducer using the screw included with the coupling.
3) Attach the motor flange to the reducer using the M6 reducer mounting screws.
4) Attach the motor flange to the motor adapter using the M5 motor flange mounting screws.
5) Attach the coupling to the actuator using the screw included with the coupling. (Tighten the coupling from the hole above the motor adapter sintered element.)
6) Attach the sintered element to the motor adapter.
7) After attaching the motor to the reducer using the motor shaft mounting screw, attach a plug.
8) Attach the motor to the reducer using the M6 motor mounting screws (provided by the customer).

*2 Dimension when mounting type "NGC" or "NGC3/5" (with coupling) is selected
When option "NG" (without coupling) is selected, attach at a suitable position taking the recommended value of the coupling (provided by the customer) as well as the motor flange dimensions into consideration.

Included Parts List

Description	Quantity						Tightening torque [N·m] (Reference value)
	Mounting type						
	NZ	NZC	NG	NGC	NGC3/5	N	
Motor adapter	1	1	1	1	1	1	—
Sintered element	2	2	2	2	2	2	9.0
Motor adapter mounting screw (M10)	4	4	4	4	4	4	24.5
Motor flange	1	1	1	1	1	—	—
Motor flange mounting screw (M5)	4	4	4	4	4	—	3.0
Coupling (O.D. ø40/I.D. ø19)	—	1	—	—	—	—	8.0
Coupling (O.D. ø55/I.D. ø19)	—	—	—	1	1	—	14.0
Reducer	—	—	—	—	1	—	14.0
Reducer mounting screw	—	—	—	—	4	—	5.2

LEY/LEYG Series
Motor Mounting Parts

Motor Flange Option

A motor can be added to the motorless specification after purchase. The applicable mounting types are shown below. (Except NM1 and NM3)
Use the following part numbers to select a compatible motor flange option and place an order.

How to Order

LEY−MF 25 □ − NZ

❶ ❷ ❸

❶ Size

25	For LEY25/LEYG25
32	For LEY32/LEYG32
63	For LEY63

❷ Motor mounting position

P	Parallel
PL∗1	Parallel (Lead L)
D	In-line

∗1 Size 63 only

❸ Mounting type

NZ	NV
NY	NU
NX	NT
NW	NM2

∗ Refer to "Compatible Motors and Mounting Types" below.

Compatible Motors and Mounting Types∗4

Applicable motor model		Size/Mounting type											
Manufacturer	Series	25				32/63							
		NZ	NY	NX	NM2	NZ	NY	NX	NW	NV	NU	NT	NM2
Mitsubishi Electric Corporation	MELSERVO JN/J4/J5	●	—	—	—	●	—	—	—	—	—	—	—
YASKAWA Electric Corporation	Σ-V/7/X	●	—	—	—	●	—	—	—	—	—	—	—
SANYO DENKI CO., LTD.	SANMOTION R	●	—	—	—	●	—	—	—	—	—	—	—
OMRON Corporation	OMNUC G5/1S	●	—	—	—	—	●	—	—	—	—	—	—
Panasonic Corporation	MINAS A5/A6	● (MHMF only)	●	—	—	—	●	—	—	—	—	—	—
FANUC CORPORATION	βis (-B)	●	—	—	—	● (β1 only)	—	—	●	—	—	—	—
NIDEC SANKYO CORPORATION	S-FLAG	●	—	—	—	●	—	—	—	—	—	—	—
KEYENCE CORPORATION	SV/SV2	●	—	—	—	●	—	—	—	—	—	—	—
FUJI ELECTRIC CO., LTD.	ALPHA7	●	—	—	—	●	—	—	—	—	—	—	—
ORIENTAL MOTOR Co., Ltd.	α STEP AR/AZ	—	—	—	● AR/AZ (46 only)	—	—	—	—	—	—	—	●∗3
Rockwell Automation, Inc. (Allen-Bradley)	Kinetix MP/VP/TL	● (TL only)	—	—	—	—	—	●∗1 (MP/VP only)	—	—	—	● (TL only)	—
Beckhoff Automation GmbH	AM 30/31/80/81	●	—	—	—	—	—	●∗1 (AM80/ AM81 only)	—	●∗1 (AM30 only)	●∗2 (AM31 only)	—	—
Siemens AG	SIMOTICS S-1FK7	—	—	●	—	—	—	●∗1	—	—	—	—	—
Delta Electronics, Inc.	ASDA-A2	●	—	—	—	●	—	—	—	—	—	—	—
ANCA Motion	AMD2000	●	—	—	—	●	—	—	—	—	—	—	—

∗ When the LEY□$^{25}_{32}$□$^{NM1}_{NM3}$□-□ or LEY□G$^{25}_{32}$□□$^{NM1}_{NM3}$□-□ is purchased, it is not possible to change to other mounting types.

∗1 Motor mounting position: In-line only
∗2 Only in-line type is available for size 63.
∗3 Except size 63
∗4 The compatible motors and mounting types are typical examples. Select the mounting type after referring to the "Motor Mounting, Applicable Motor Dimensions" tables on the following actuator body "Dimensions" pages.

Dimensions: Motor Flange Option

Motor mounting position: Parallel

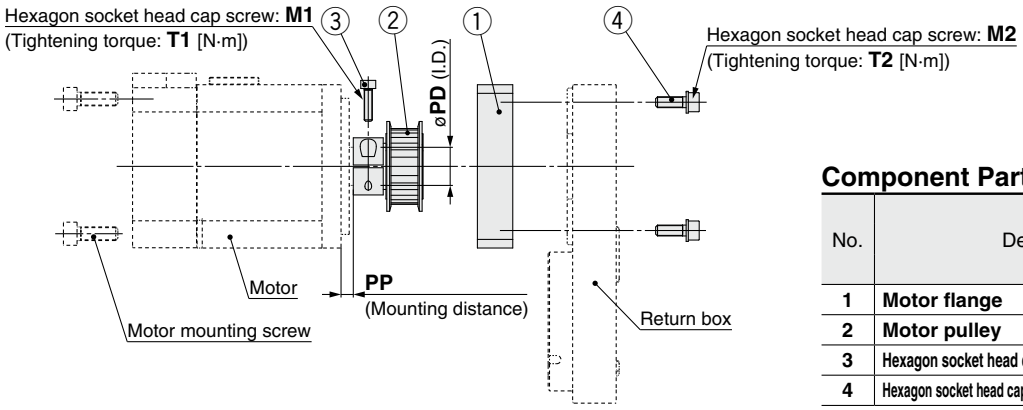

Component Parts

No.	Description	Quantity Size 25, 32	Quantity Size 63
1	**Motor flange**	1	1
2	**Motor pulley**	1	1
3	**Hexagon socket head cap screw (to secure the pulley)**	1	1
4	**Hexagon socket head cap screw (to mount the motor flange)**	2	4

Motor flange details

Size: 25, 32

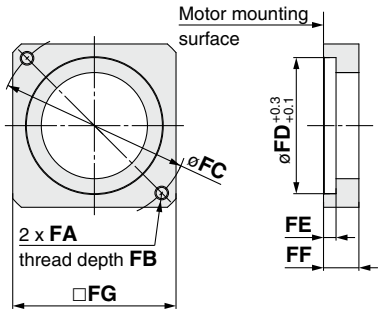

Size 25: NM2

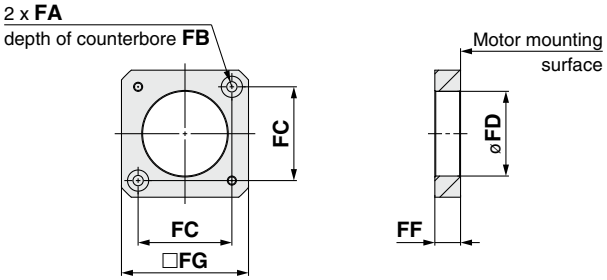

Size: 63

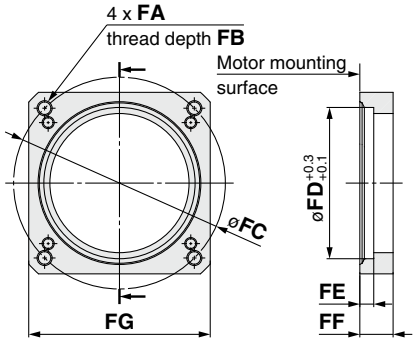

Size 32: NM2

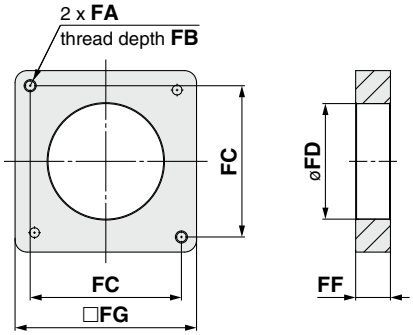

Dimensions

[mm]

Size	Motor type	FA	FB	FC	FD	FE	FF	FG	M1	T1	M2	T2	PD	PP
25	**NZ**	M4 x 0.7	7.5	46	30	3.7	11	42	M2.5 x 10	1.0	M3 x 8	0.63	8	7.5
	NY	M3 x 0.5	5.5	45	30	5	11	42	M2.5 x 10	1.0	M3 x 8	0.63	8	7.5
	NX	M4 x 0.7	7	46	30	3.7	8	42	M2.5 x 10	1.0	M3 x 8	0.63	8	4.5
	NM2	ø3.4	7	31	30	3.7	8.5	42	M2.5 x 10	1.0	M3 x 8	0.63	6	4.8
32	**NZ**	M5 x 0.8	8.5	70	50	4.6	13	60	M3 x 12	1.5	M4 x 12	1.5	14	4.5
	NY	M4 x 0.7	7	70	50	4.6	13	60	M3 x 12	1.5	M4 x 12	1.5	11	4.5
	NW	M5 x 0.8	8.5	70	50	4.6	13	60	M4 x 12	3.6	M4 x 12	1.5	9	4.5
	NU	M5 x 0.8	8.5	70	50	4.6	13	60	M3 x 12	1.5	M4 x 12	1.5	11	4.5
	NT	M5 x 0.8	8.5	70	50	4.6	17	60	M3 x 12	1.5	M4 x 12	1.5	12	8.5
	NM2	M4 x 0.7	8	50	38.2	—	11.5	60	M3 x 12	1.5	M4 x 12	1.5	10	3
63	**NZ**	M5 x 0.8	8.5	70	50	4.6	11	60	M4 x 12	3.6	M4 x 12	2.7	14	4.5
	NY	M4 x 0.7	8	70	50	4.6	11	60	M4 x 12	3.6	M4 x 12	2.7	14	4.5
	NW	M5 x 0.8	8.5	70	50	4.6	11	60	M4 x 12	3.6	M4 x 12	2.7	9	4.5
	NT	M5 x 0.8	8.5	70	50	4.6	14.5	60	M4 x 12	3.6	M4 x 12	2.7	12	8

Dimensions: Motor Flange Option

Motor mounting position: In-line [Size: 25, 32]

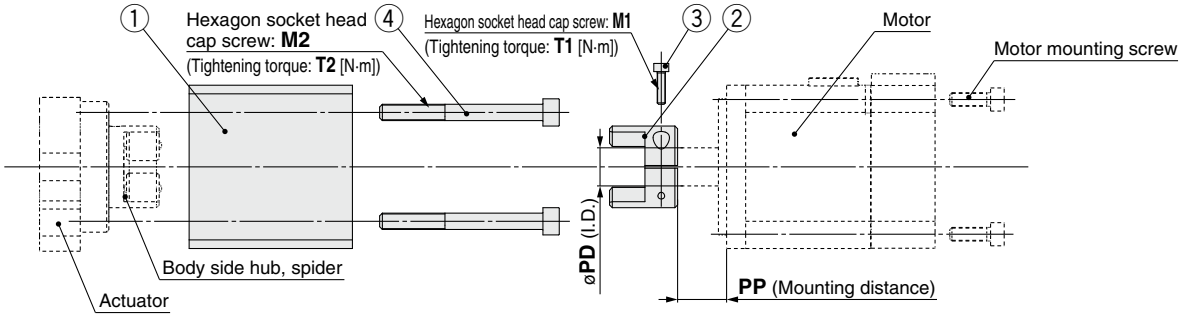

Motor flange details

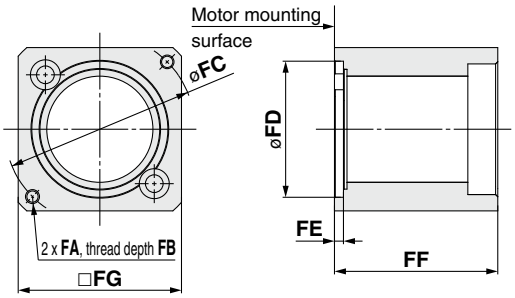

Component Parts

No.	Description	Quantity
1	**Motor flange**	1
2	**Motor hub**	1
3	**Hexagon socket head cap screw (to secure the hub)**	1
4	**Hexagon socket head cap screw (to mount the motor block)**	2

Size: 25, Motor type: NM2

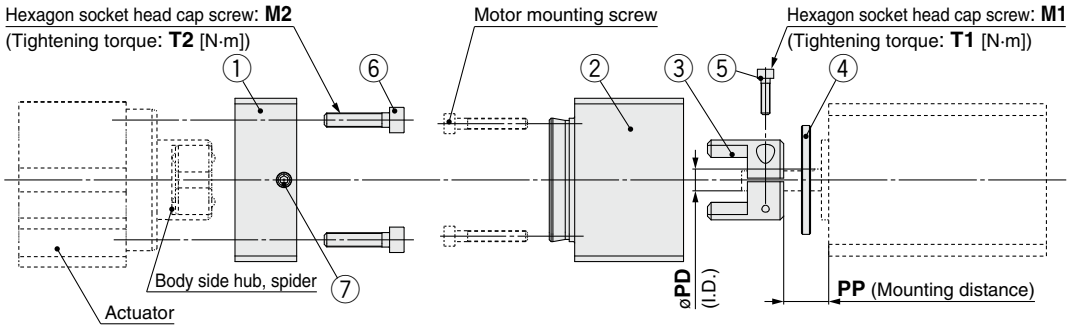

Motor flange B details

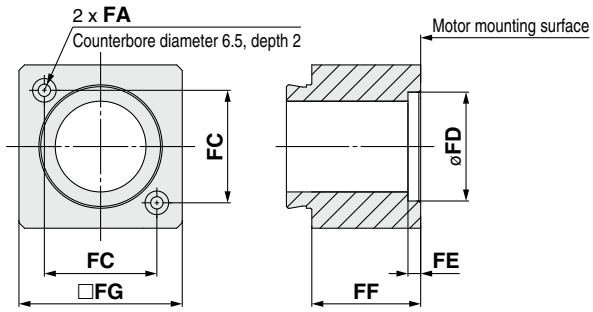

Component Parts

No.	Description	Quantity
1	**Motor flange A**	1
2	**Motor flange B**	1
3	**Motor hub**	1
4	**Ring spacer**	1
5	**Hexagon socket head cap screw (to secure the hub)**	1
6	**Hexagon socket head cap screw (to mount the motor flange A)**	2
7	**Hexagon socket head set screw (to secure the motor flange B)**	2

Dimensions

[mm]

Size	Motor type	FA	FB	FC	FD	FE	FF	FG	M1	T1	M2	T2	PD	PP
25	**NZ**	M4 x 0.7	7.5	46	30	3.7	47	45	M2.5 x 10	1.0	M4 x 40	1.5	8	12.5
	NY	M3 x 0.5	6	45	30	4.2	47	45	M2.5 x 10	1.0	M4 x 40	1.5	8	12.5
	NX	M4 x 0.7	7.5	46	30	3.7	47	45	M2.5 x 10	1.0	M4 x 40	1.5	8	7
	NM2	ø3.4	28	31	22	2.5	30	45	M2.5 x 10	1.0	M4 x 40	1.5	6	12.4
32	**NZ**	M5 x 0.8	8.5	70	50	3.3	60	60	M3 x 12	1.5	M6 x 60	5.2	14	18
	NY	M4 x 0.7	8	70	50	3.3	60	60	M4 x 12	3.6	M6 x 60	5.2	11	18
	NX	M5 x 0.8	8.5	63	40	3.5	63	60	M4 x 12	3.6	M6 x 60	5.2	9	5
	NW	M5 x 0.8	8.5	70	50	3.3	60	60	M4 x 12	3.6	M6 x 60	5.2	9	12
	NV	M4 x 0.7	8	63	40	3.3	63	60	M4 x 12	3.6	M6 x 60	5.2	9	5
	NU	M5 x 0.8	8.5	70	50	3.3	60	60	M4 x 12	3.6	M6 x 60	5.2	11	12
	NT	M5 x 0.8	8.5	70	50	3.3	60	60	M3 x 12	1.5	M6 x 60	5.2	12	18
	NM2	M4 x 0.7	8	50	36	3.3	60	60	M4 x 12	3.6	M6 x 60	5.2	10	12

Dimensions: Motor Flange Option

Motor mounting position: In-line [Size: 63]

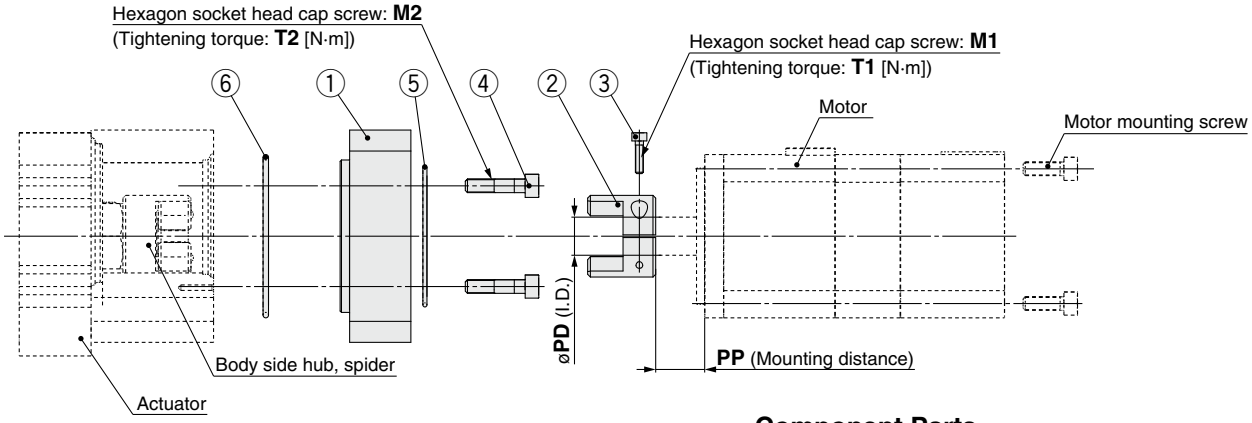

Motor flange details

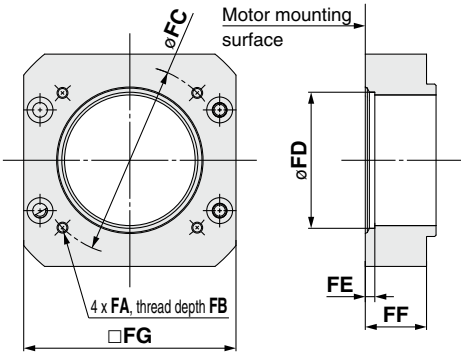

Component Parts

No.	Description	Quantity
1	**Motor flange**	1
2	**Motor hub**	1
3	**Hexagon socket head cap screw (to secure the hub)**	1
4	**Hexagon socket head cap screw (to mount the motor adapter)**	4
5	**O-ring (Wire diameter ø1.5)**	1
6	**O-ring (Wire diameter ø2.0)**	1

Dimensions

[mm]

Size	Motor type	FA	FB	FC	FD	FE	FF	FG	M1	T1	M2	T2	PD	PP
63	**NZ**	M5 x 0.8	10	70	50	3.5	22.5	78	M3 x 12	1.5	M5 x 22	3	14	17.7
	NY	M4 x 0.7	8	70	50	3.5	22.5	78	M3 x 12	1.5	M5 x 22	3	14	17.7
	NX	M5 x 0.8	10	63	40	3.5	27.5	78	M4 x 12	3.6	M5 x 22	3	9	6.7
	NW	M5 x 0.8	10	70	50	3.5	22.5	78	M4 x 12	3.6	M5 x 22	3	9	11.7
	NV	M4 x 0.7	8	63	40	3.5	27.5	78	M4 x 12	3.6	M5 x 22	3	9	6.7
	NU	M5 x 0.8	10	70	50	3.5	22.5	78	M4 x 12	3.6	M5 x 22	3	11	11.7
	NT	M5 x 0.8	10	70	50	3.5	22.5	78	M3 x 12	1.5	M5 x 22	3	12	17.7

Auto Switch Mounting

Auto Switch Proper Mounting Position

Applicable auto switch: D-M9□(V), D-M9□E(V), D-M9□W(V), D-M9□A(V)

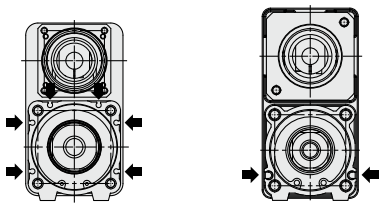

LEY63 LEY16, 25, 32, 40

➡ Switch mounting groove

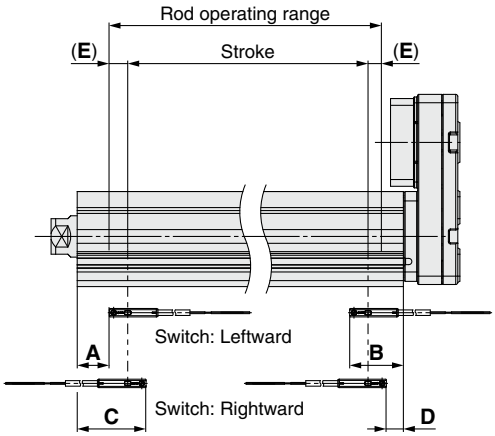

[mm]

Size	Stroke range	Auto switch position				Return to origin distance	Operating range
		Leftward mounting		Rightward mounting			
		A	B	C	D	E	—
25	15 to 100	27	62.5	39	50.5	(2)	4.2
	105 to 400	52		64			
32	20 to 100	30.5	65.5	42.5	53.5	(2)	4.9
	105 to 500	60.5		72.5			
63	50 to 200	37	86	49	74	(4)	9.8
	205 to 500	72		84			
	505 to 800	107		119			

* The values in the table to the left are to be used as a reference when mounting auto switches for stroke end detection. Adjust the auto switch after confirming the operating conditions in the actual setting.
* An auto switch cannot be mounted on the same side as a motor.
* For LEYG series models (with a guide), an auto switch cannot be mounted on the guide attachment side (rod side).
* Since the operating range is provided as a guideline including hysteresis, it cannot be guaranteed (assuming approx. ±30% dispersion). It may change substantially depending on the ambient environment.

Auto Switch Mounting

Size: 16, 25, 32, 40, 63

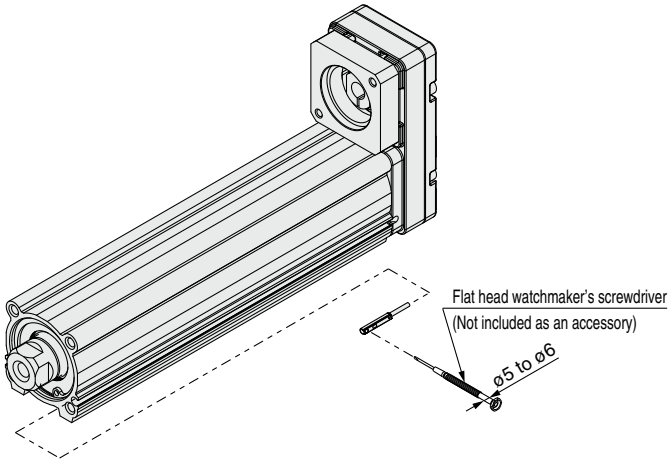

Tightening Torque for Auto Switch Mounting Screw [N·m]

Auto switch model	Tightening torque
D-M9□(V) D-M9□E(V) D-M9□W(V)	0.05 to 0.15
D-M9□A(V)	0.05 to 0.10

* When tightening the auto switch mounting screw (included with the auto switch), use a watchmaker's screwdriver with a handle diameter of 5 to 6 mm.

Size: 100

A switch spacer is required in order to mount an auto switch.
When mounting an auto switch, first, hold a switch spacer between your fingers and press it into the slot. When doing this, confirm that it is set in the correct mounting orientation, or reinsert it if necessary. Next, insert the auto switch into the slot and slide it until it is positioned under the switch spacer.
After confirming the mounting position, use a flat head watchmaker's screwdriver to tighten the included auto switch mounting screw.

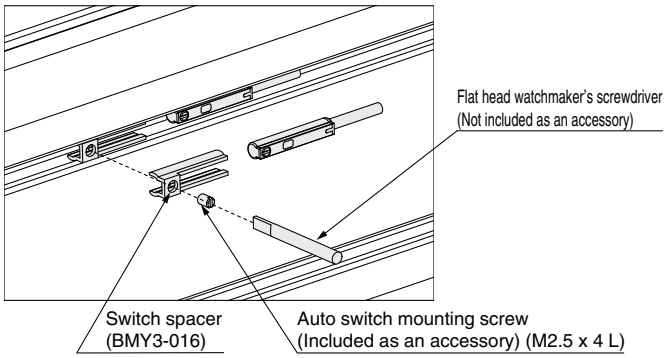

Switch Spacer Part No.

Switch spacer	BMY3-016

Tightening Torque for Auto Switch Mounting Screw

Auto switch model	Tightening torque
D-M9□(V) D-M9□W(V)	0.10 to 0.15

Solid State Auto Switch Direct Mounting Type
D-M9N(V)/D-M9P(V)/D-M9B(V)

Refer to the SMC website for details on products that are compliant with international standards.

Grommet

- **2-wire load current is reduced (2.5 to 40 mA).**
- **Using flexible cable as standard spec.**

⚠Caution

Precautions

Fix the auto switch with the existing screw installed on the auto switch body. The auto switch may be damaged if a screw other than the one supplied is used.

Auto Switch Specifications

PLC: Programmable Logic Controller

D-M9□, D-M9□V (With indicator light)						
Auto switch model	D-M9N	D-M9NV	D-M9P	D-M9PV	D-M9B	D-M9BV
Electrical entry direction	In-line	Perpendicular	In-line	Perpendicular	In-line	Perpendicular
Wiring type	3-wire				2-wire	
Output type	NPN		PNP		—	
Applicable load	IC circuit, Relay, PLC				24 VDC relay, PLC	
Power supply voltage	5, 12, 24 VDC (4.5 to 28 V)				—	
Current consumption	10 mA or less				—	
Load voltage	28 VDC or less		—		24 VDC (10 to 28 VDC)	
Load current	40 mA or less				2.5 to 40 mA	
Internal voltage drop	0.8 V or less at 10 mA (2 V or less at 40 mA)				4 V or less	
Leakage current	100 μA or less at 24 VDC				0.8 mA or less	
Indicator light	Red LED illuminates when turned ON.					
Standards	CE/UKCA marking					

Oilproof Flexible Heavy-duty Lead Wire Specifications

Auto switch model		D-M9N(V)	D-M9P(V)	D-M9B(V)
Sheath	Outside diameter [mm]	ø2.6		
Insulator	Number of cores	3 cores (Brown/Blue/Black)		2 cores (Brown/Blue)
	Outside diameter [mm]	ø0.88		
Conductor	Effective area [mm²]	0.15		
	Strand diameter [mm]	ø0.05		
Min. bending radius [mm] (Reference values)		17		

∗ Refer to the **Web Catalog** for solid state auto switch common specifications.
∗ Refer to the **Web Catalog** for lead wire lengths.

Weight

[g]

Auto switch model		D-M9N(V)	D-M9P(V)	D-M9B(V)
Lead wire length	0.5 m (**Nil**)	8		7
	1 m (**M**)	14		13
	3 m (**L**)	41		38
	5 m (**Z**)	68		63

Dimensions

[mm]

D-M9□

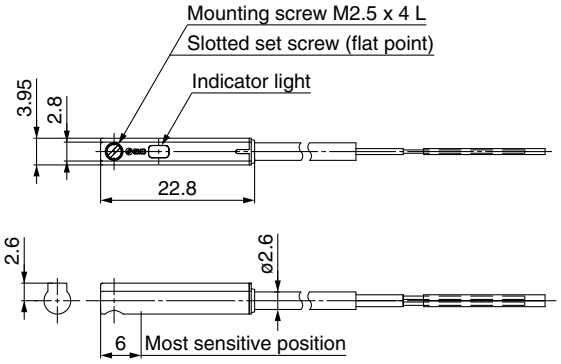

D-M9□V

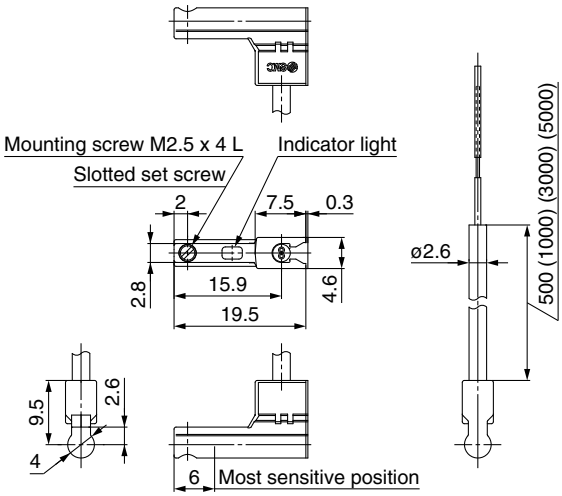

Normally Closed Solid State Auto Switch Direct Mounting Type
D-M9NE(V)/D-M9PE(V)/D-M9BE(V)

Refer to the SMC website for details on products that are compliant with international standards.

Grommet

- **Output signal turns on when no magnetic force is detected.**
- **Can be used for the actuator adopted by the solid state auto switch D-M9 series (excluding special order products)**

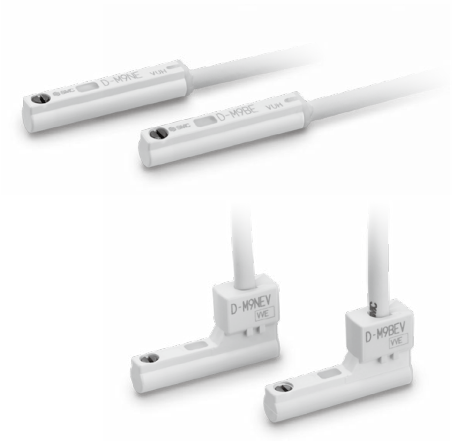

⚠Caution

Precautions

Fix the auto switch with the existing screw installed on the auto switch body. The auto switch may be damaged if a screw other than the one supplied is used.

Auto Switch Specifications

PLC: Programmable Logic Controller

D-M9□E, D-M9□EV (With indicator light)						
Auto switch model	D-M9NE	D-M9NEV	D-M9PE	D-M9PEV	D-M9BE	D-M9BEV
Electrical entry direction	In-line	Perpendicular	In-line	Perpendicular	In-line	Perpendicular
Wiring type	3-wire				2-wire	
Output type	NPN		PNP		—	
Applicable load	IC circuit, Relay, PLC				24 VDC relay, PLC	
Power supply voltage	5, 12, 24 VDC (4.5 to 28 V)				—	
Current consumption	10 mA or less				—	
Load voltage	28 VDC or less		—		24 VDC (10 to 28 VDC)	
Load current	40 mA or less				2.5 to 40 mA	
Internal voltage drop	0.8 V or less at 10 mA (2 V or less at 40 mA)				4 V or less	
Leakage current	100 μA or less at 24 VDC				0.8 mA or less	
Indicator light	Red LED illuminates when turned ON.					
Standards	CE/UKCA marking					

Oilproof Flexible Heavy-duty Lead Wire Specifications

Auto switch model		D-M9NE(V)	D-M9PE(V)	D-M9BE(V)
Sheath	Outside diameter [mm]	ø2.6		
Insulator	Number of cores	3 cores (Brown/Blue/Black)		2 cores (Brown/Blue)
	Outside diameter [mm]	ø0.88		
Conductor	Effective area [mm²]	0.15		
	Strand diameter [mm]	ø0.05		
Min. bending radius [mm] (Reference values)		17		

∗ Refer to the **Web Catalog** for solid state auto switch common specifications.
∗ Refer to the **Web Catalog** for lead wire lengths.

Weight

[g]

Auto switch model		D-M9NE(V)	D-M9PE(V)	D-M9BE(V)
Lead wire length	0.5 m (**Nil**)	8		7
	1 m (**M**)∗1	14		13
	3 m (**L**)	41		38
	5 m (**Z**)∗1	68		63

∗1 The 1 m and 5 m options are produced upon receipt of order.

Dimensions

[mm]

D-M9□E

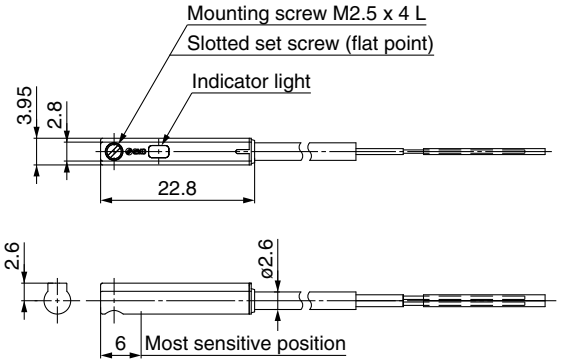

D-M9□EV

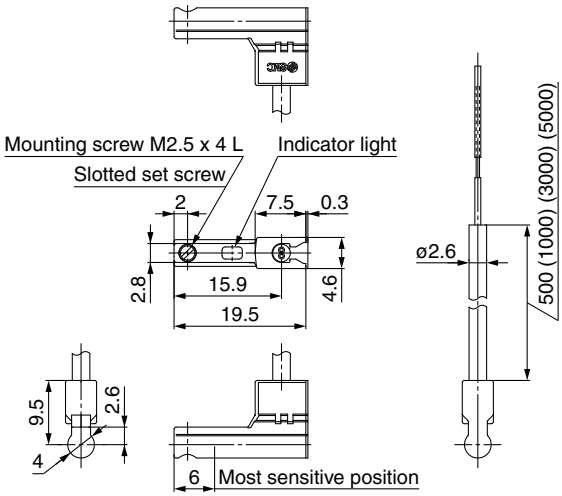

2-Color Indicator Solid State Auto Switch Direct Mounting Type
D-M9NW(V)/D-M9PW(V)/D-M9BW(V)

Refer to the SMC website for details on products that are compliant with international standards.

Grommet

- **2-wire load current is reduced (2.5 to 40 mA).**
- **Using flexible cable as standard spec.**
- **The proper operating range can be determined by the color of the light. (Red → Green ← Red)**

⚠Caution

Precautions

Fix the auto switch with the existing screw installed on the auto switch body. The auto switch may be damaged if a screw other than the one supplied is used.

Auto Switch Specifications

PLC: Programmable Logic Controller

D-M9□W, D-M9□WV (With indicator light)						
Auto switch model	D-M9NW	D-M9NWV	D-M9PW	D-M9PWV	D-M9BW	D-M9BWV
Electrical entry direction	In-line	Perpendicular	In-line	Perpendicular	In-line	Perpendicular
Wiring type	3-wire				2-wire	
Output type	NPN		PNP		—	
Applicable load	IC circuit, Relay, PLC				24 VDC relay, PLC	
Power supply voltage	5, 12, 24 VDC (4.5 to 28 V)				—	
Current consumption	10 mA or less				—	
Load voltage	28 VDC or less		—		24 VDC (10 to 28 VDC)	
Load current	40 mA or less				2.5 to 40 mA	
Internal voltage drop	0.8 V or less at 10 mA (2 V or less at 40 mA)				4 V or less	
Leakage current	100 μA or less at 24 VDC				0.8 mA or less	
Indicator light	Operating range ····· Red LED illuminates. Proper operating range ····· Green LED illuminates.					
Standards	CE/UKCA marking					

Oilproof Flexible Heavy-duty Lead Wire Specifications

Auto switch model		D-M9NW(V)	D-M9PW(V)	D-M9BW(V)
Sheath	Outside diameter [mm]	ø2.6		
Insulator	Number of cores	3 cores (Brown/Blue/Black)		2 cores (Brown/Blue)
	Outside diameter [mm]	ø0.88		
Conductor	Effective area [mm²]	0.15		
	Strand diameter [mm]	ø0.05		
Min. bending radius [mm] (Reference values)		17		

∗ Refer to the **Web Catalog** for solid state auto switch common specifications.
∗ Refer to the **Web Catalog** for lead wire lengths.

Weight

[g]

Auto switch model		D-M9NW(V)	D-M9PW(V)	D-M9BW(V)
Lead wire length	0.5 m (**Nil**)	8		7
	1 m (**M**)	14		13
	3 m (**L**)	41		38
	5 m (**Z**)	68		63

Dimensions

[mm]

D-M9□W

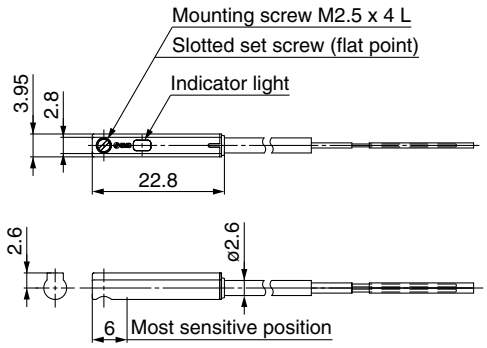

D-M9□WV

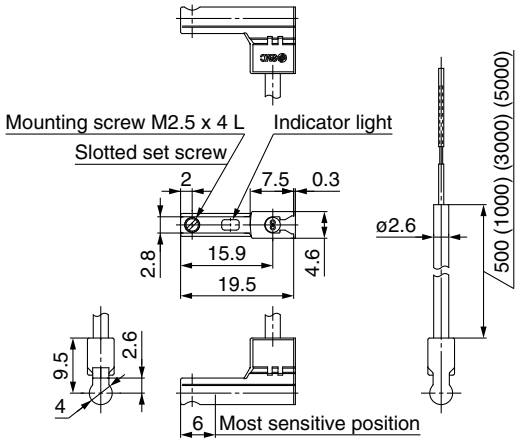

Water Resistant 2-Color Indicator Solid State Auto Switch: Direct Mounting Type
D-M9NA(V)/D-M9PA(V)/D-M9BA(V)

RoHS

Grommet

- **Water (coolant) resistant type**
- **2-wire load current is reduced (2.5 to 40 mA).**
- **The proper operating range can be determined by the color of the light. (Red → Green ← Red)**
- **Using flexible cable as standard spec.**

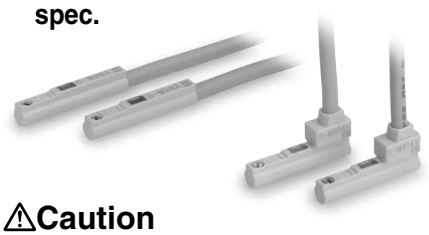

⚠Caution

Precautions

Fix the auto switch with the existing screw installed on the auto switch body. The auto switch may be damaged if a screw other than the one supplied is used.
Please contact SMC if using coolant liquid other than water based solution.

Weight

[g]

Auto switch model		D-M9NA(V)	D-M9PA(V)	D-M9BA(V)
Lead wire length	0.5 m (**Nil**)	8		7
	1 m (**M**)	14		13
	3 m (**L**)	41		38
	5 m (**Z**)	68		63

Auto Switch Specifications

PLC: Programmable Logic Controller

D-M9□A, D-M9□AV (With indicator light)						
Auto switch model	D-M9NA	D-M9NAV	D-M9PA	D-M9PAV	D-M9BA	D-M9BAV
Electrical entry direction	In-line	Perpendicular	In-line	Perpendicular	In-line	Perpendicular
Wiring type	3-wire				2-wire	
Output type	NPN		PNP		—	
Applicable load	IC circuit, Relay, PLC				24 VDC relay, PLC	
Power supply voltage	5, 12, 24 VDC (4.5 to 28 V)				—	
Current consumption	10 mA or less				—	
Load voltage	28 VDC or less		—		24 VDC (10 to 28 VDC)	
Load current	40 mA or less				2.5 to 40 mA	
Internal voltage drop	0.8 V or less at 10 mA (2 V or less at 40 mA)				4 V or less	
Leakage current	100 μA or less at 24 VDC				0.8 mA or less	
Indicator light	Operating range ····· Red LED illuminates. Proper operating range ····· Green LED illuminates.					
Standards	CE/UKCA marking (EMC directive/RoHS directive)					

Oilproof Flexible Heavy-duty Lead Wire Specifications

Auto switch model		D-M9NA□	D-M9NAV□	D-M9PA□	D-M9PAV□	D-M9BA□	D-M9BAV□
Sheath	Outside diameter [mm]	2.6					
Insulator	Number of cores	3 cores (Brown/Blue/Black)				2 cores (Brown/Blue)	
	Outside diameter [mm]	0.88					
Conductor	Effective area [mm²]	0.15					
	Strand diameter [mm]	0.05					
Min. bending radius [mm] (Reference value)		17					

∗ Refer to the **Web Catalog** for solid state auto switch common specifications.
∗ Refer to the **Web Catalog** for lead wire lengths.

Dimensions

[mm]

D-M9□A

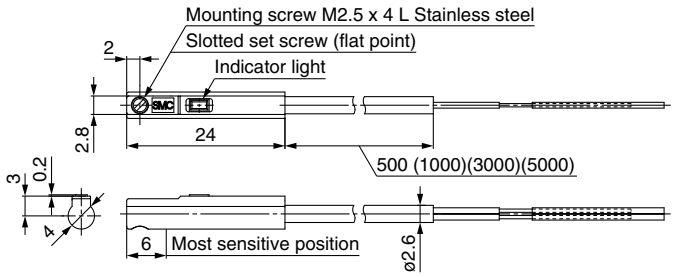

D-M9□AV

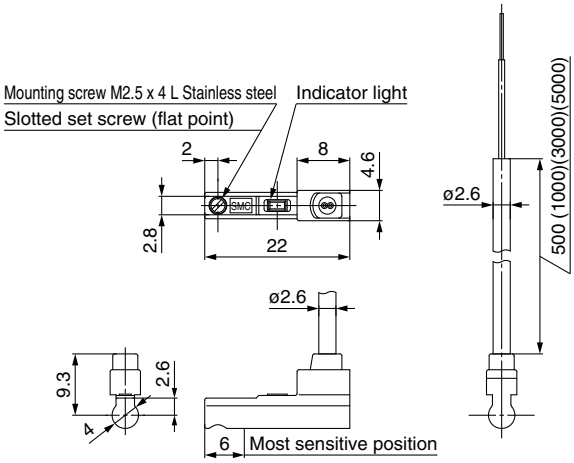

LEY/LEYG Series
Specific Product Precautions 1

Be sure to read this before handling the products. Refer to the back cover for safety instructions. For electric actuator and auto switch precautions, refer to the "Handling Precautions for SMC Products" and the "Operation Manual" on the SMC website: https://www.smcworld.com

Design / Selection

⚠Warning

1. Do not apply a load in excess of the specification limits.

Select a suitable actuator by work load and allowable lateral load on the rod end. If a load in excess of the specification limits is applied to the piston rod, the generation of play in the piston rod sliding parts, reduced accuracy, etc., may occur and adversely affect the operation and service life of the product.

2. Do not use the product in applications where excessive external force or impact force is applied to it.

This can cause a malfunction.

3. When used as a stopper, select the LEYG series "Sliding bearing" for strokes of 30 mm or less.

4. When used as a stopper, fix the main body with a guide attachment ("Top mounting" or "Bottom mounting").

If the end of the actuator is used to fix the main body (end mounting), the excessive load acts on the actuator, which may adversely affect the operation and service life of the product.

Handling

⚠Caution

1. To conduct a pushing operation, be sure to set the product to force/speed control, and use the product within the specified pushing speed range for each series.

Do not allow the piston rod to hit the workpiece and end of the stroke in the position control. The lead screw, bearing and internal stopper may be damaged and lead to malfunction.

2. For pushing operations, the maximum torque value of the motor to be used should be set to 90% or less of the rated torque of the reference motor. For the LEY63, 150% or less.

Failure to do so may result in damage or malfunction.

3. The maximum speed of this actuator is affected by the product stroke.

Check the model selection section of the catalog.

4. Do not apply a load, impact, or resistance in addition to the transferred load during return to origin.

Additional force will cause the displacement of the origin position.

5. Do not scratch or dent the sliding parts of the piston rod by bumping them or placing objects on them.

The piston rod and guide rod are manufactured to precise tolerances, so even a slight deformation may result in a malfunction.

6. When an external guide is used, connect it in such a way that no impact or load is applied to it.

Use a freely moving connector (such as a floating joint).

7. Do not operate by fixing the piston rod and moving the actuator body.

Excessive load will be applied to the piston rod, resulting in damage to the actuator and a reduced service life of the product.

Handling

⚠Caution

8. When an actuator is operated with one end fixed and the other free (ends tapped or flange), a bending moment may act on the actuator due to vibration generated at the stroke end, which can damage the actuator. In such cases, install a mounting bracket to suppress the vibration of the actuator body or reduce the speed so that the actuator does not vibrate at the stroke end.

Also, use a mounting bracket when moving the actuator body or when a long stroke actuator is mounted horizontally and fixed at one end.

9. Avoid using the electric actuator in such a way that rotational torque would be applied to the piston rod.

Failure to do so may result in the deformation of the non-rotating guide, abnormal auto switch responses play in the internal guide, or an increase in the sliding resistance.

Refer to the table below for the approximate values of the allowable range of rotational torque.

Allowable rotational torque [N·m] or less	LEY25□	LEY32	LEY63	LEY100
	1.1	1.4	2.8	4.6

When screwing a bracket or nut into the piston rod end, hold the flats of the end of the "socket" with a wrench (the piston rod should be fully retracted). Do not apply tightening torque to the non-rotating mechanism.

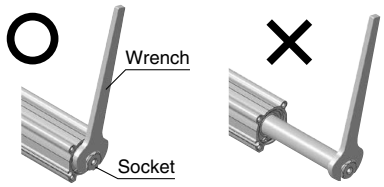

10. When using auto switches with the guide rod type LEYG series, the following limits apply. Please consider the following before selecting the product.

- Auto switches must be inserted from the front side with the rod (plate) sticking out.
- Auto switches with perpendicular electrical entries cannot be used.
- Auto switches cannot be fixed with the parts hidden behind the guide attachment (the side of the rod that sticks out).
- Please consult with SMC when using auto switches on the side of the rod that sticks out.

Enclosure

IP – □□

First digit **Second digit**

● First Digit: Degree of protection against solid foreign objects

0	Not protected
1	Protected against solid foreign objects of 50 mmø and larger
2	Protected against solid foreign objects of 12 mmø and larger
3	Protected against solid foreign objects of 2.5 mmø and larger
4	Protected against solid foreign objects of 1.0 mmø and larger
5	Dust protected
6	Dust-tight

LEY/LEYG Series
Specific Product Precautions 2

Be sure to read this before handling the products. Refer to the back cover for safety instructions. For electric actuator and auto switch precautions, refer to the "Handling Precautions for SMC Products" and the "Operation Manual" on the SMC website: https://www.smcworld.com

Enclosure

- **Second Digit: Degree of protection against water**

0	Not protected	—
1	Protected against vertically falling water droplets	Dripproof type 1
2	Protected against vertically falling water droplets when enclosure is tilted up to 15°	Dripproof type 2
3	Protected against rainfall when enclosure tilted up to 60°	Rainproof type
4	Protected against splashing water	Splashproof type
5	Protected against water jets	Water-jet-proof type
6	Protected against powerful water jets	Powerful water-jet-proof type
7	Protected against the effects of temporary immersion in water	Immersible type
8	Protected against the effects of continuous immersion in water	Submersible type

Example) IP65: Dust-tight, Water-jet-proof type
"Water-jet-proof" means that no water enters the equipment that could hinder it from operating normally when water is applied for 3 minutes in the prescribed manner. Take appropriate protective measures as the device is not usable in environments where droplets of water are splashed constantly.

Mounting

⚠Caution

1. **When mounting workpieces or attachments to the piston rod end "socket," hold the flats of the "socket" with a wrench so that the piston rod does not rotate. The bolt should be tightened within the specified torque range.**
   Failure to do so may cause abnormal auto switch responses, play in the internal guide, or an increase in the sliding resistance.
2. **When mounting the product and/or a workpiece, tighten the mounting screws within the specified torque range.**
   Tightening the screws with a higher torque than recommended may result in a malfunction, while tightening with a lower torque can result in the displacement of the mounting position or, in extreme conditions, the actuator could become detached from its mounting position.

<LEY Series>

Workpiece fixed/Rod end female thread

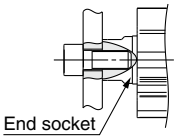

Model	Screw size	Max. tightening torque [N·m]	Max. screw-in depth [mm]	End socket width across flats [mm]
LEY25	M8 x 1.25	12.5	13	17
LEY32	M8 x 1.25	12.5	13	22
LEY63	M16 x 2	106	21	36
LEY100	M20 x 2.5	204	27	27

Workpiece fixed/Rod end male thread (When "Rod end male thread" is selected.)

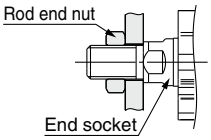

Model	Thread size	Max. tightening torque [N·m]	Effective thread length [mm]	End socket width across flats [mm]
LEY25	M14 x 1.5	65.0	20.5	17
LEY32	M14 x 1.5	65.0	20.5	22
LEY63	M18 x 1.5	97.0	26	36

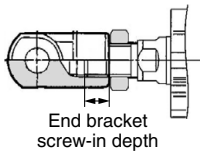

Model	Rod end nut		End bracket screw-in depth [mm]
	Width across flats [mm]	Length [mm]	
LEY25	22	8	8 or more
LEY32	22	8	8 or more
LEY63	27	11	11 or more

∗ Rod end nut is an accessory.

Mounting

⚠Caution

Body fixed/Body bottom tapped type (When "Body bottom tapped" is selected.)

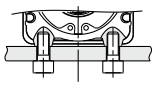

Model	Screw size	Max. tightening torque [N·m]	Max. screw-in depth [mm]
LEY25	M5 x 0.8	3.0	6.5
LEY32	M6 x 1.0	5.2	8.8
LEY63	M8 x 1.25	12.5	10
LEY100	M10 x 1.5	24.5	17

Body fixed/Rod side/Head side tapped type

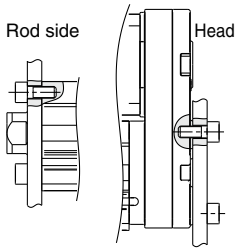

Model	Screw size	Max. tightening torque [N·m]	Max. screw-in depth [mm]
LEY25	M5 x 0.8	3.0	8
LEY32	M6 x 1.0	5.2	10
LEY63	M8 x 1.25	12.5	14

∗1 Excludes the LEY□D

<LEYG Series>

Workpiece fixed/Plate tapped type

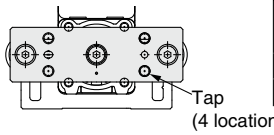

Model	Screw size	Max. tightening torque [N·m]	Max. screw-in depth [mm]
LEYG25$^{M}_{L}$	M6 x 1.0	5.2	11
LEYG32$^{M}_{L}$	M6 x 1.0	5.2	12

Body fixed/Top mounting

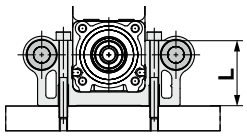

Model	Screw size	Max. tightening torque [N·m]	Length: L [mm]
LEYG25$^{M}_{L}$	M5 x 0.8	3.0	40.3
LEYG32$^{M}_{L}$	M5 x 0.8	3.0	50.3

Body fixed/Bottom mounting

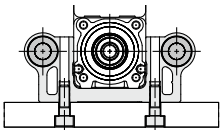

Model	Screw size	Max. tightening torque [N·m]	Max. screw-in depth [mm]
LEYG25$^{M}_{L}$	M6 x 1.0	5.2	12
LEYG32$^{M}_{L}$	M6 x 1.0	5.2	12

Body fixed/Head side tapped type

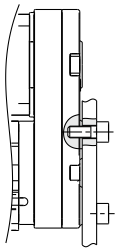

Model	Screw size	Max. tightening torque [N·m]	Max. screw-in depth [mm]
LEYG25$^{M}_{L}$	M5 x 0.8	3.0	8
LEYG32$^{M}_{L}$	M6 x 1.0	5.2	10

LEY/LEYG Series
Specific Product Precautions 3

Be sure to read this before handling the products. Refer to the back cover for safety instructions. For electric actuator and auto switch precautions, refer to the "Handling Precautions for SMC Products" and the "Operation Manual" on the SMC website: https://www.smcworld.com

Mounting

⚠Caution

3. Keep the flatness of the mounting surface within the following ranges when mounting the actuator body and workpiece.

Mounting the product on an uneven workpiece or base may result in an increase in the sliding resistance.

Model	Mounting position	Flatness
LEY□	Body/Body bottom 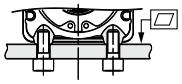	0.1 mm or less
LEYG□	Top mounting/Bottom mounting 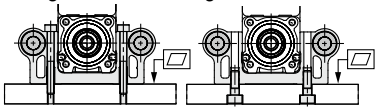	0.02 mm or less
	Workpiece/Plate mounting 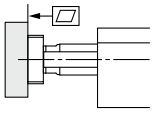	0.02 mm or less

Maintenance

⚠Warning

1. Ensure that the power supply is stopped and the workpiece is removed before starting maintenance work or replacing the product.

- **Maintenance frequency**

Perform maintenance according to the table below.

Frequency	Appearance check	Belt check
Inspection before daily operation	○	—
Inspection every 6 months/ 250 km/5 million cycles*1	○	○

*1 Select whichever comes first.

- **Items for visual appearance check**

1. Loose set screws, Abnormal amount of dirt, etc.
2. Check for visible damage, Check of cable joint
3. Vibration, Noise

- **Items for belt check**

Stop operation immediately and replace the belt when any of the following occur. In addition, ensure your operating environment and conditions satisfy the requirements specified for the product.

a. Tooth shape canvas is worn out
Canvas fiber becomes fuzzy, Rubber is coming off and the fiber has become whitish, Lines of fibers have become unclear

b. Peeling off or wearing of the side of the belt
Belt corner has become rounded and frayed threads sticks out

c. Belt partially cut
Belt is partially cut, Foreign matter caught in the teeth of other parts is causing damage

d. A vertical line on belt teeth is visible
Damage which is made when the belt runs on the flange

e. Rubber back of the belt is softened and sticky

f. Cracks on the back of the belt are visible

2. For IP65 equivalent type, apply grease on the piston rod periodically. Grease should be applied at 1 million cycles or 200 km, whichever comes first.

· Grease pack order number: GR-S-010 (10 g)/GR-S-020 (20 g)

LEY100 Series
Specific Product Precautions
Be sure to read this before handling the products.

Handling

⚠Caution

Continuous use at max. force is prohibited.

When using the product at max. force, be sure to use the product within 15 s and with a duty ratio of 20% or less. (With motor)

Example of driving conditions with a duty ratio of 20%

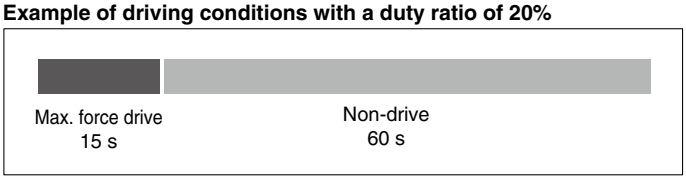

For the motorless type, be sure to check the specifications of the motor and driver to be used in combination before use.
The force should be within the rated force when using continuously.

Motor Flange Assembly

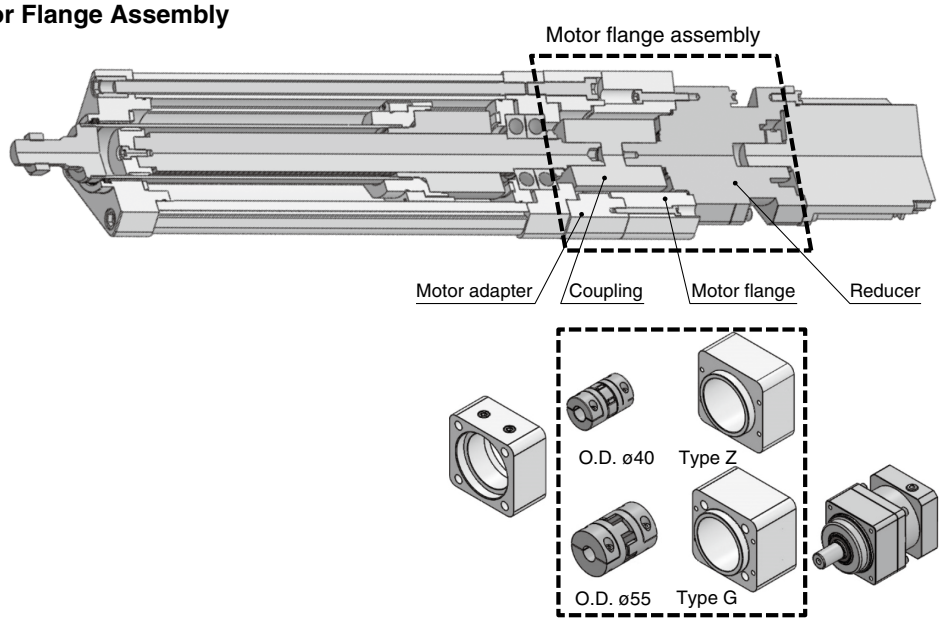

Products from other companies and
self-produced products can be used instead.

Symbol	Motor adapter	Motor flange (Type)	Coupling (ø40)	Coupling (ø55)	Reducer (Reduction ratio)
NZ	●	● (Z)	—	—	—
NZC	●	● (Z)	●	—	—
NG	●	● (G)	—	—	—
NGC	●	● (G)	—	●	—
NGC3	●	● (G)	—	●	● (1/3)
NGC5	●	● (G)	—	●	● (1/5)
N	●	—	—	—	—

Slide Table/High Precision Type

In-line LESYH□D Series

p. 199

Right/Left side parallel LESYH□$^{R}_{L}$ Series

p. 199

Model Selection 1

LESYH Series ▶ p. 205

Selection Procedure

Positioning Control Selection Procedure

Step 1 Check the work load–speed. → **Step 2** Check the cycle time. → **Step 3** Check the allowable moment.

Selection Example

The model selection method shown below corresponds to SMC's standard motor. For use in combination with a motor from a different manufacturer, check the available product information of the motor to be used.

Operating conditions

- Workpiece mass: 1 [kg]
- Speed: 200 [mm/s]
- Mounting orientation: Vertical
- Stroke: 50 [mm]
- Acceleration/Deceleration: 3000 [mm/s²]
- Cycle time: 0.5 s
- Workpiece mounting condition:

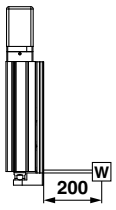

Step 1 **Check the work load–speed. <Speed–Work load graph>** (page 201)

Select a model based on the workpiece mass and speed while referencing the speed–work load graph.

Selection example) The **LESYH16□B-50** can be temporarily selected as a possible candidate based on the graph shown on the right side.

∗ Refer to the selection method of motor manufacturers for regeneration resistance.

LESYH16□□/AC Servo Motor Vertical

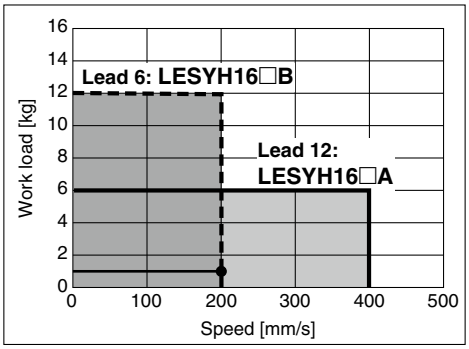

<Speed–Work load graph>

Step 2 **Check the cycle time.**

Calculate **the cycle time** using the following calculation method.

Cycle time:
T can be found from the following equation.

$T = T1 + T2 + T3 + T4$ [s]

- T1: Acceleration time and T3: Deceleration time can be found by the following equation.

  $T1 = V/a1$ [s] $T3 = V/a2$ [s]

- T2: Constant speed time can be found from the following equation.

  $$T2 = \frac{L - 0.5 \cdot V \cdot (T1 + T3)}{V} \text{ [s]}$$

- T4: Settling time varies depending on the conditions such as motor types, load, and in position of the step data. Therefore, calculate the settling time while referencing the following value.

  $T4 = 0.15$ [s]

Calculation example)
T1 to T4 can be calculated as follows.

$T1 = V/a1 = 200/3000 = 0.07$ [s],

$T3 = V/a2 = 200/3000 = 0.07$ [s]

$$T2 = \frac{L - 0.5 \cdot V \cdot (T1 + T3)}{V} = \frac{50 - 0.5 \cdot 200 \cdot (0.07 + 0.07)}{200} = 0.18 \text{ [s]}$$

$T4 = 0.15$ [s]

The cycle time can be found as follows.

$T = T1 + T2 + T3 + T4$
$= 0.07 + 0.18 + 0.07 + 0.15$
$=$ **0.47 [s]**

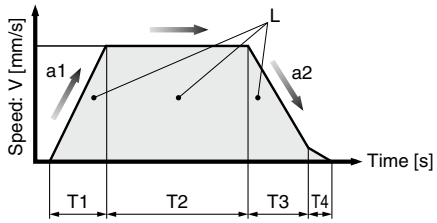

L : Stroke [mm] ····· (Operating condition)
V : Speed [mm/s] ····· (Operating condition)
a1: Acceleration [mm/s²] ··· (Operating condition)
a2: Deceleration [mm/s²] ··· (Operating condition)

T1: Acceleration time [s] ··· Time until reaching the set speed
T2: Constant speed time [s] ··· Time while the actuator is operating at a constant speed
T3: Deceleration time [s] ··· Time from the beginning of the constant speed operation to stop
T4: Settling time [s] ··· Time until positioning is completed

Step 3 **Check the allowable moment.**
<Static allowable moment> (page 201)
<Dynamic allowable moment> (page 203)

Confirm the moment that applies to the actuator is within the allowable range for both static and dynamic conditions.

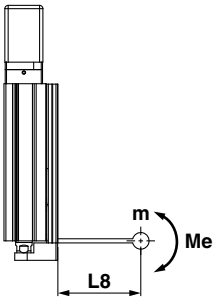

LESYH16/Pitching

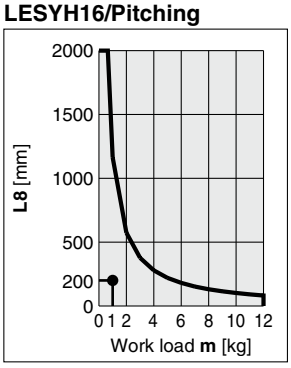

<Dynamic allowable moment>

Based on the above calculation result, the LESYH16□N□B-50 should be selected.

Selection Procedure

Force Control Selection Procedure

Step 1 Check the required force. → **Step 2** Check the pushing force. → **Step 3** Check the allowable moment.

Selection Example

The model selection method shown below corresponds to SMC's standard motor.
For use in combination with a motor from a different manufacturer, check the available product information of the motor to be used.

Operating conditions

- Pushing force: 210 N
- Workpiece mass: 1 kg
- Speed: 100 mm/s
- Stroke: 100 mm
- Mounting position: Vertical upward
- Pushing time + Operation (A): 5 s
- Full cycle time (B): 10 s

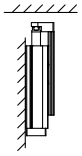

Step 1 **Check the required force.**

Calculate the approximate required force for a pushing operation.
Selection example) ● Pushing force: 210 [N]
● Workpiece mass: 1 [kg]
The approximate required force can be found to be 210 + 10 = 220 [N].
Select a model based on the approximate required force while referencing the specifications (page 206).
Selection example based on the specifications)
● Approximate required force: 220 [N]
● Speed: 100 [mm/s]
The **LESYH16□B** can be temporarily selected as a possible candidate.
Then, calculate the required force for a pushing operation.
If the mounting position is vertical upward, add the actuator table weight.
Selection example based on the table weight)
● **LESYH16□B** table weight: 0.7 [kg]
The required force can be found to be 220 + 7 = 227 [N].

Table Weight Unit [kg]

Model	Stroke [mm]		
	50	100	150
LESYH16	0.4	0.7	—
LESYH25	0.9	1.3	1.7

∗ If the mounting position is vertical upward, add the table weight.

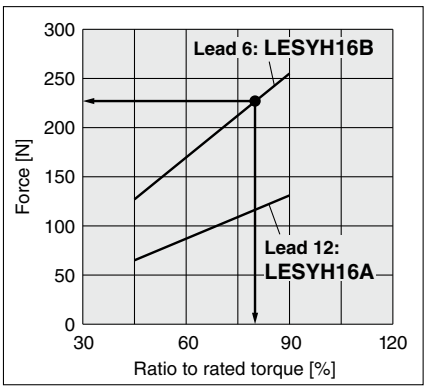

<Force conversion graph>

Step 2 **Check the pushing force. <Force conversion graph>**

Select a model based on the ratio to rated torque and force while referencing the force conversion graph.
Selection example)
Based on the graph shown on the right side,
● Ratio to rated torque: 80 [%]
● Force: 227 [N]
The **LESYH16B** can be temporarily selected as a possible candidate.

Step 3 **Check the allowable moment.**
<Static allowable moment> (page 201)
<Dynamic allowable moment> (page 203)

Confirm the moment that applies to the actuator is within the allowable range for both static and dynamic conditions.

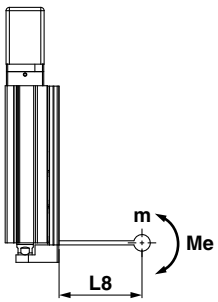

LESYH16/Pitching

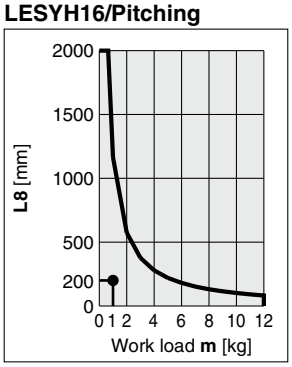

<Dynamic allowable moment>

Based on the above calculation result, the LESYH16B-100 should be selected.

Speed–Work Load Graph (Guide)

LESYH16□

Horizontal

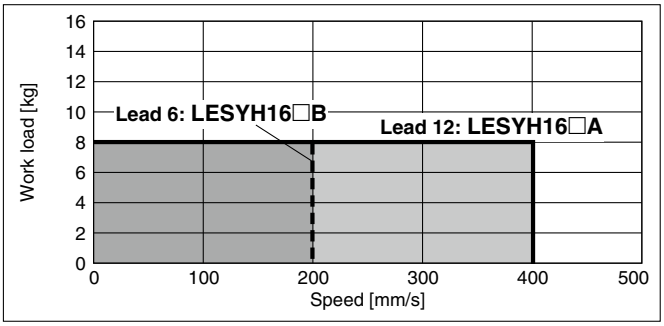

Vertical

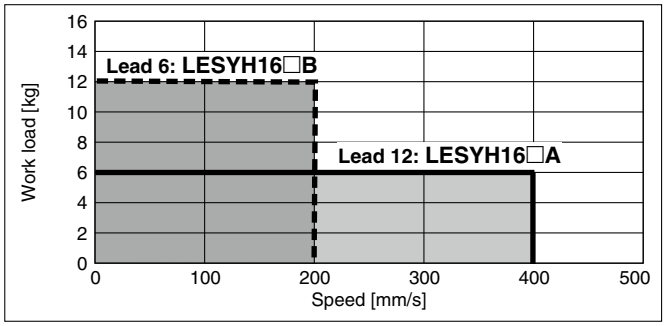

LESYH25□

Horizontal

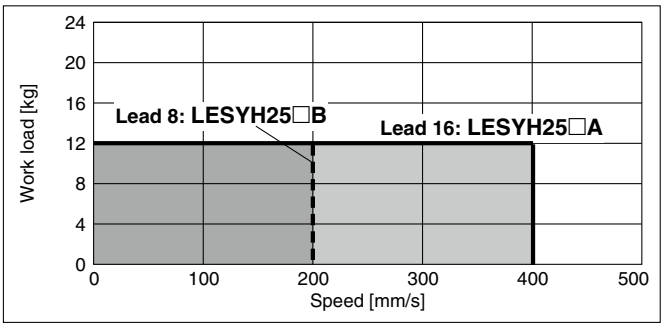

Vertical

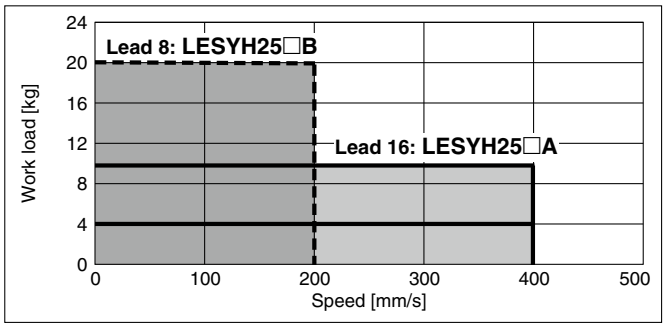

Force Conversion Graph (Guide)

∗ These graphs show an example of when the standard motor is mounted. Calculate the force based on used motor and driver.

LESYH16□ (Motor mounting position: Parallel/In-line)

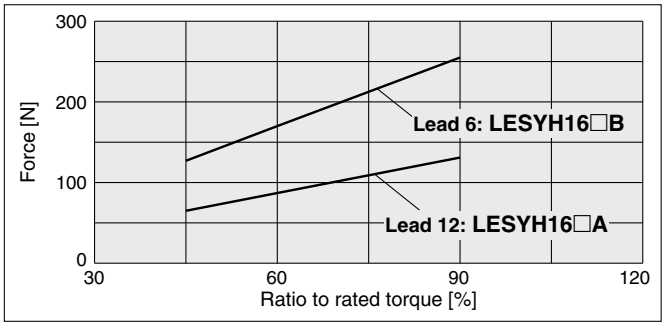

LESYH25□ (Motor mounting position: Parallel)

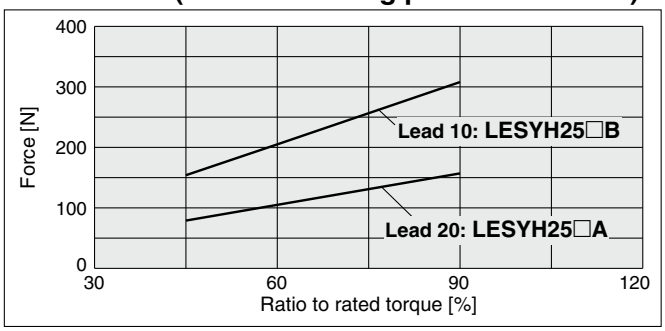

LESYH25D□ (Motor mounting position: In-line)

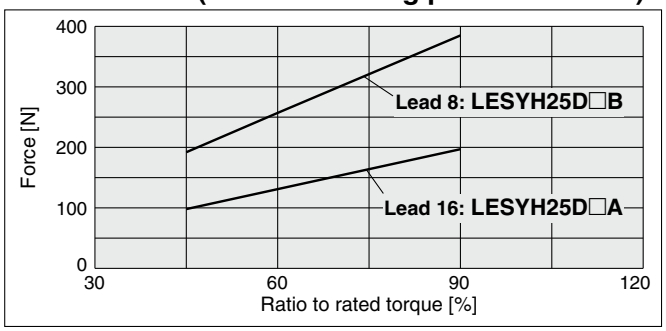

∗ When using the force control or speed control, set the max. value to be no more than 90% of the rated torque.

Static Allowable Moment

Model	LESYH16		LESYH25		
Stroke [mm]	50	100	50	100	150
Pitching [N·m]	26	43	77	112	155
Yawing [N·m]					
Rolling [N·m]	48		146	177	152

Dynamic Allowable Moment

∗ These graphs show the amount of allowable overhang (guide unit) when the center of gravity of the workpiece overhangs in one direction. When selecting the overhang, refer to the "Calculation of Guide Load Factor" or the Electric Actuator Model Selection Software for confirmation: https://www.smcworld.com

Acceleration/Deceleration ——— 5000 mm/s²

Orientation	Load overhanging direction **m**: Work load [kg] **Me**: Allowable moment [N·m] **L**: Overhang to the work load center of gravity [mm]		Model	
			LESYH16	**LESYH25**
Horizontal/Bottom	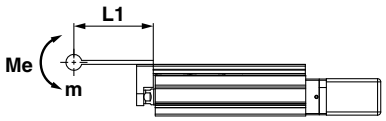	X	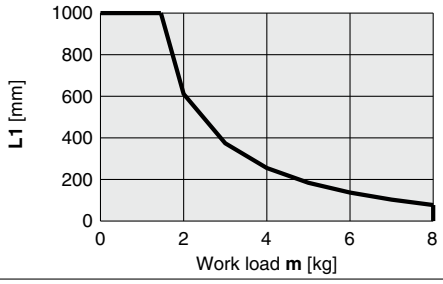	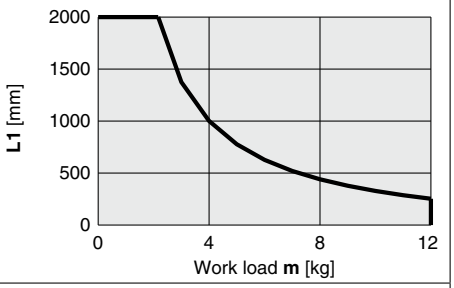
	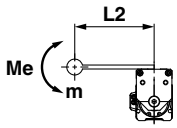	Y	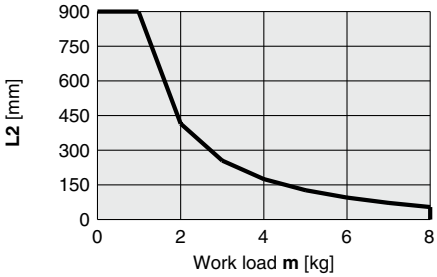	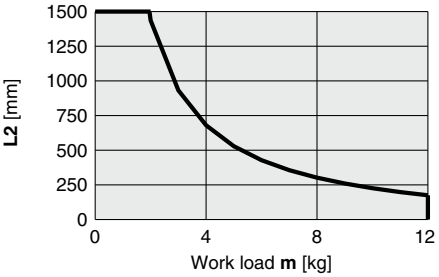
	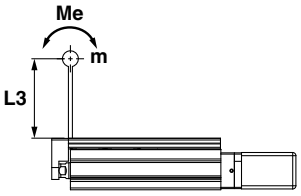	Z	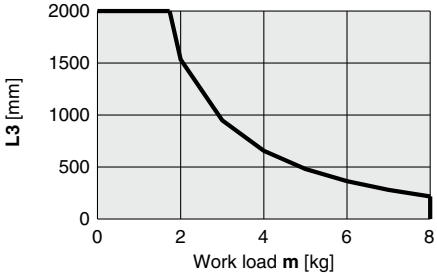	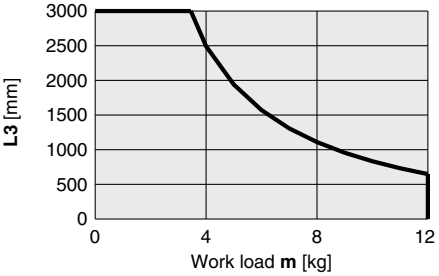
Horizontal (Wall)	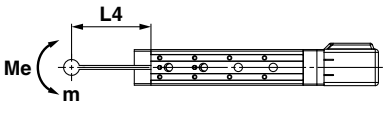	X	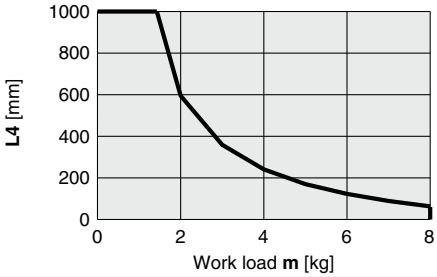	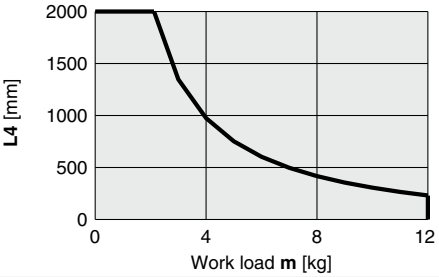
	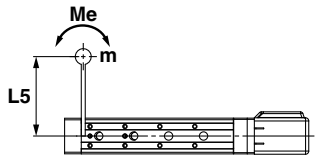	Y	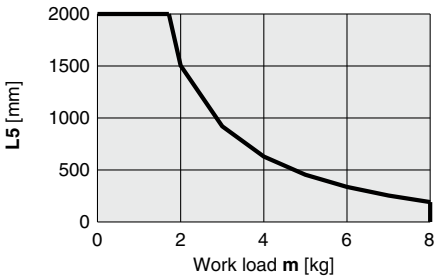	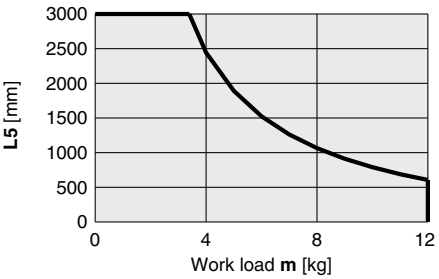
	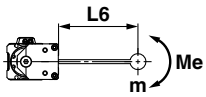	Z	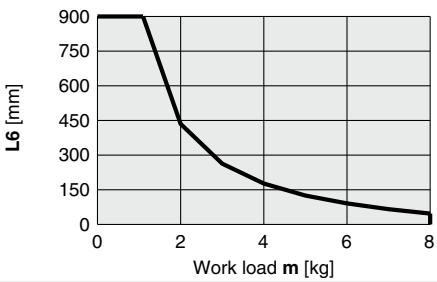	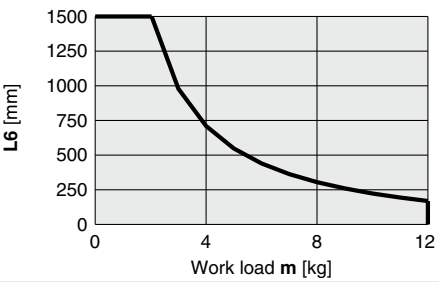

Dynamic Allowable Moment

∗ These graphs show the amount of allowable overhang (guide unit) when the center of gravity of the workpiece overhangs in one direction. When selecting the overhang, refer to the "Calculation of Guide Load Factor" or the Electric Actuator Model Selection Software for confirmation: https://www.smcworld.com

Acceleration/Deceleration —— 5000 mm/s²

Orientation	Load overhanging direction **m**: Work load [kg] **Me**: Allowable moment [N·m] **L**: Overhang to the work load center of gravity [mm]		Model: LESYH16	Model: LESYH25
Vertical	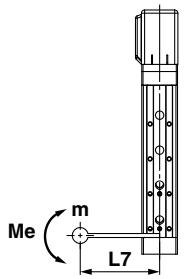	Y	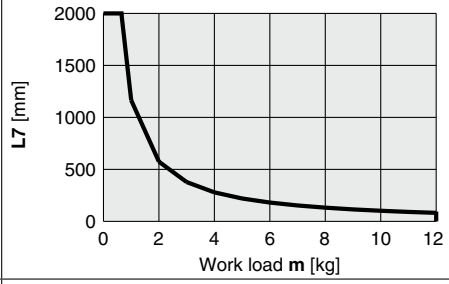	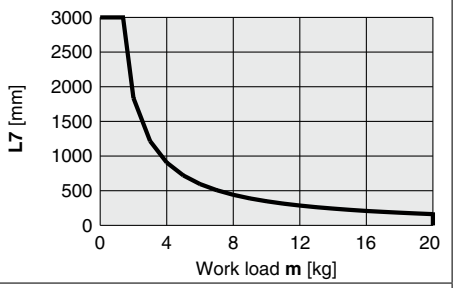
	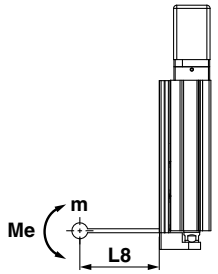	Z	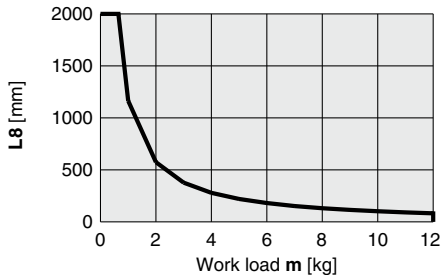	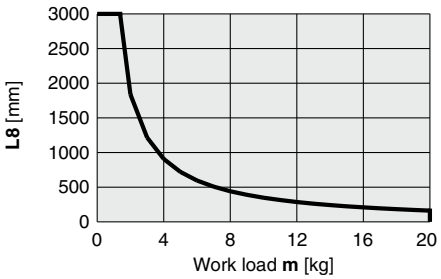

Calculation of Guide Load Factor

1. Decide operating conditions.
   Model: LESYH
   Size: 16
   Mounting orientation: Horizontal/Bottom/Wall/Vertical
   Acceleration [mm/s²]: **a**
   Work load [kg]: **m**
   Work load center position [mm]: **Xc/Yc/Zc**
2. Select the target graph while referencing the model, size, and mounting orientation.
3. Based on the acceleration and work load, find the overhang [mm]: **Lx/Ly/Lz** from the graph.
4. Calculate the load factor for each direction.
   $\alpha x = Xc/Lx$, $\alpha y = Yc/Ly$, $\alpha z = Zc/Lz$
5. Confirm the total of αx, αy, and αz is 1 or less.
   $\alpha x + \alpha y + \alpha z \leq 1$
   When 1 is exceeded, consider a reduction of acceleration and work load, or a change of the work load center position and series.

Mounting orientation

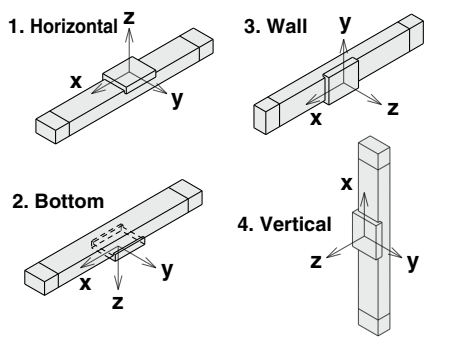

Example

1. Operating conditions
   Model: LESYH
   Size: 16
   Mounting orientation: Horizontal
   Acceleration [mm/s²]: 5000
   Work load [kg]: 4.0
   Work load center position [mm]: **Xc = 80**, **Yc = 50**, **Zc = 60**
2. Select three graphs from the top of the first row on page 202.
3. **Lx = 250 mm**, **Ly = 160 mm**, **Lz = 700 mm**
4. The load factor for each direction can be found as follows.
   $\alpha x = 80/250 = 0.32$
   $\alpha y = 50/160 = 0.32$
   $\alpha z = 60/700 = 0.09$
5. $\alpha x + \alpha y + \alpha z = 0.73 \leq 1$

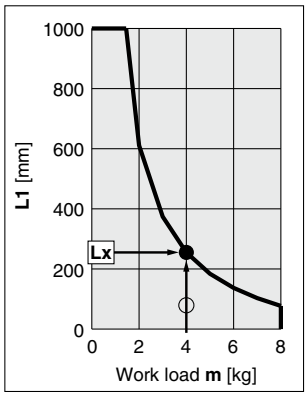

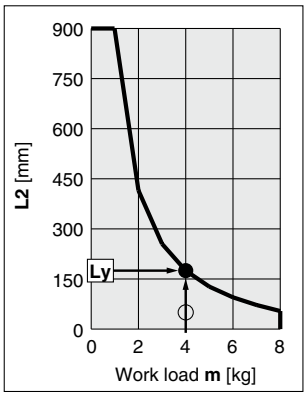

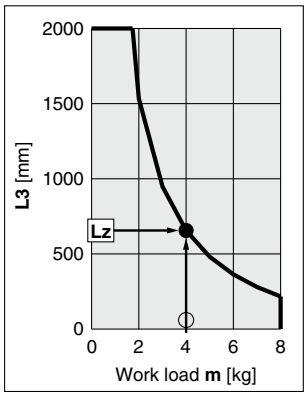

Table Accuracy

∗ These values are initial guideline values.

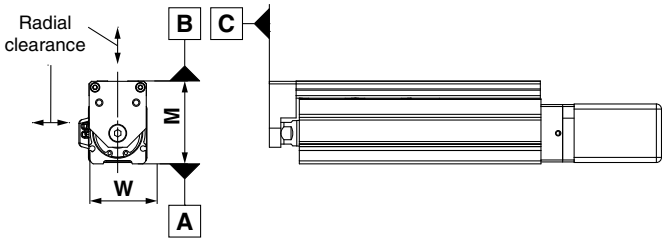

Model	LESYH16	LESYH25
B side parallelism to A side [mm]	Refer to Table 1.	
B side traveling parallelism to A side [mm]	Refer to Graph 1.	
C side perpendicularity to A side [mm]	0.05	
M dimension tolerance [mm]	±0.3	
W dimension tolerance [mm]	±0.2	
Radial clearance [μm]	–10 to 0	–14 to 0

Table 1 B side parallelism to A side

Model	Stroke [mm]		
	50	100	150
LESYH16	0.05	0.08	—
LESYH25	0.06	0.08	0.125

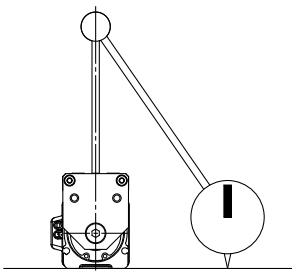

Traveling parallelism:
The amount of deflection on a dial gauge when the table travels a full stroke with the body secured on a reference base surface

Graph 1 B side traveling parallelism to A side

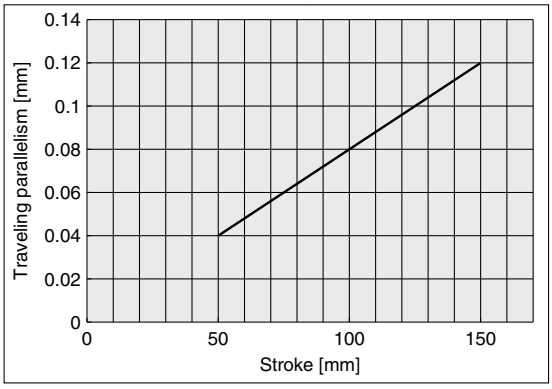

Table Deflection (Reference Value)

∗ These values are initial guideline values.

Table displacement due to pitch moment load
Table displacement when loads are applied to the section marked with the arrow with the slide table stuck out.

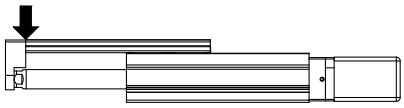

Table displacement due to yaw moment load
Table displacement when loads are applied to the section marked with the arrow with the slide table stuck out.

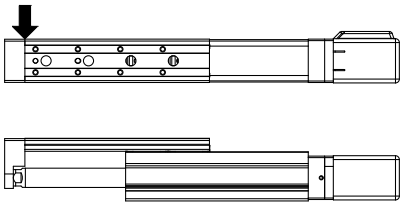

Table displacement due to roll moment load
Table displacement of section A when loads are applied to the section F with the slide table retracted.

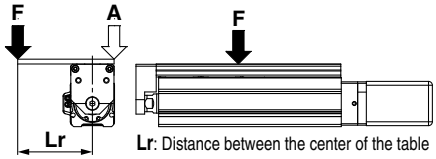

Lr: Distance between the center of the table and the work load center of gravity

LESYH16

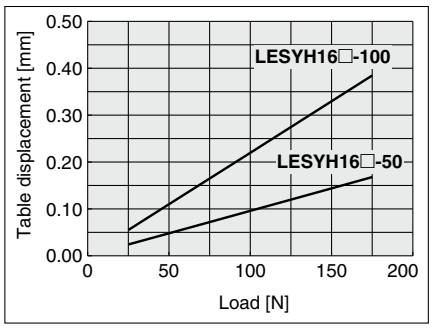

LESYH16

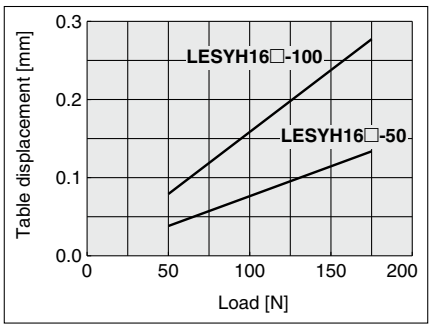

LESYH16

Lr = 120 mm

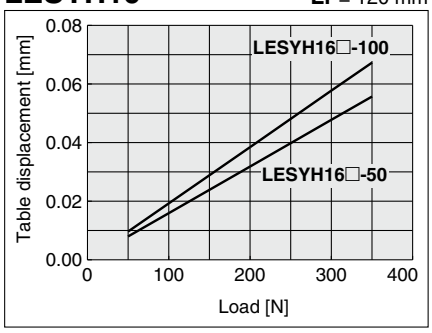

LESYH25

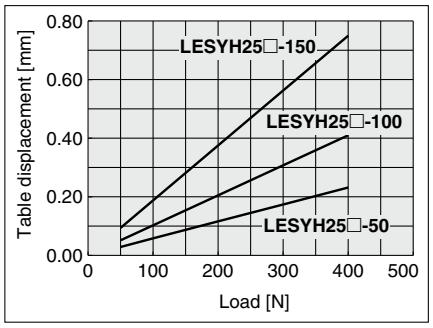

LESYH25

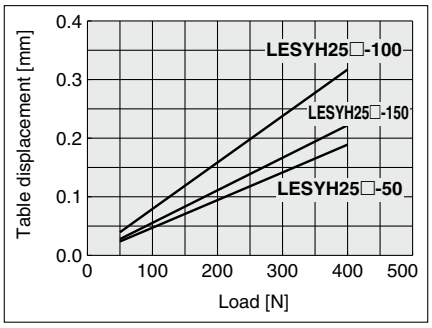

LESYH25

Lr = 200 mm

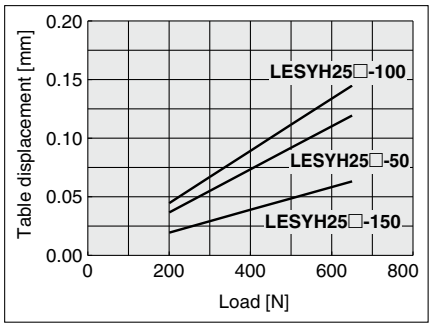

Motorless Type

Slide Table/ High Precision Type

LESYH Series LESYH16, 25

RoHS

How to Order

LESYH 16 D NZ A – 50

❶ ❷ ❸ ❹ ❺

❶ Size

16
25

❷ Motor mounting position

D	In-line
R	Right side parallel
L	Left side parallel

❸ Mounting type

NZ	NU
NY	NT
NX	NM1
NW	NM2
NV	NM3

❹ Lead [mm]

	Size	
	16	25*1
A	12	16 (20)
B	6	8 (10)

*1 The values shown in ( ) are the leads for the right/left side parallel types. Except mounting type NM1 (Equivalent leads which include the pulley ratio [1.25:1])

❺ Stroke [mm]

	Size	
	16	25
50	●	●
100	●	●
150	—	●

Compatible Motors and Mounting Types*4

Applicable motor model		Size/Mounting type														
Manufacturer	Series	16						25								
		NZ	NY	NX	NM1	NM2	NM3	NZ	NY	NX	NW	NV	NU	NT	NM1	NM2
Mitsubishi Electric Corporation	MELSERVO JN/J4/J5	●	—	—	—	—	—	●	—	—	—	—	—	—	—	—
YASKAWA Electric Corporation	Σ-V/7/X	●*3	—	—	—	—	—	●	—	—	—	—	—	—	—	—
SANYO DENKI CO., LTD.	SANMOTION R	●	—	—	—	—	—	●	—	—	—	—	—	—	—	—
OMRON Corporation	OMNUC G5/1S	●	—	—	—	—	—	—	●	—	—	—	—	—	—	—
Panasonic Corporation	MINAS A5/A6	● (MHMF only)	●	—	—	—	—	—	●	—	—	—	—	—	—	—
FANUC CORPORATION	βis (-B)	●	—	—	—	—	—	● (β1 only)	—	—	●	—	—	—	—	—
NIDEC SANKYO CORPORATION	S-FLAG	●	—	—	—	—	—	●	—	—	—	—	—	—	—	—
KEYENCE CORPORATION	SV/SV2	●*3	—	—	—	—	—	●	—	—	—	—	—	—	—	—
FUJI ELECTRIC CO., LTD.	ALPHA7	●	—	—	—	—	—	●	—	—	—	—	—	—	—	—
MinebeaMitsumi Inc.	Hybrid stepping motors	—	—	—	●*1	—	●*2	—	—	—	—	—	—	—	●	—
Shinano Kenshi Co., Ltd.	CSB-BZ	—	—	—	●*1	—	●*2	—	—	—	—	—	—	—	—	—
ORIENTAL MOTOR Co., Ltd.	α STEP AR/AZ	—	—	—	—	● (46 only)	—	—	—	—	—	—	—	—	—	●
FASTECH Co., Ltd.	Ezi-SERVO	—	—	—	●	—	—	—	—	—	—	—	—	—	●	—
Rockwell Automation, Inc. (Allen-Bradley)	Kinetix MP/VP/TL	● (TL only)	—	—	—	—	—	—	—	●*1 (MP/VP only)	—	—	—	● (TL only)	—	—
Beckhoff Automation GmbH	AM 30/31/80/81	●	—	—	—	—	—	—	—	●*1 (80/81 only)	—	●*1 (30 only)	● (31 only)	—	—	—
Siemens AG	SIMOTICS S-1FK7	—	—	●	—	—	—	—	—	●*1	—	—	—	—	—	—
Delta Electronics, Inc.	ASDA-A2	●	—	—	—	—	—	●	—	—	—	—	—	—	—	—
ANCA Motion	AMD2000	●	—	—	—	—	—	●	—	—	—	—	—	—	—	—

*1 Motor mounting position: In-line only *2 Motor mounting position: Parallel only

*3 For some motors, the connector may protrude from the motor body. Be sure to check for interference with the mounting surface before selecting a motor.

*4 The compatible motors and mounting types are typical examples. Select the mounting type after referring to the "Motor Mounting, Applicable Motor Dimensions" tables on the following "Dimensions" pages.

Specifications

	Model		LESYH16		LESYH25 (Parallel)		LESYH25 (In-line)	
Actuator specifications	Stroke [mm]		50, 100		50, 100, 150			
	Work load [kg]	Horizontal*1	8		12		12	
		Vertical	6	12	10	20	10	20
	Force [N]*2 (Set value: Rated torque 45 to 90%)		65 to 131	127 to 255	79 to 157	154 to 308	98 to 197	192 to 385
	Max. speed [mm/s]		400	200	400	200	400	200
	Pushing speed [mm/s]*3		35 or less		30 or less			
	Max. acceleration/deceleration [mm/s²]		5000					
	Positioning repeatability [mm]		±0.01					
	Lost motion [mm]*4		0.1 or less					
	Ball screw specifications	Thread size [mm]	ø10		ø12			
		Lead [mm] (including pulley ratio)	12	6	16 (20)	8 (10)	16	8
		Shaft length [mm]	Stroke + 93.5		Stroke + 104.5			
	Impact/Vibration resistance [m/s²]*5		50/20					
	Actuation type		Ball screw + Belt (Parallel) Ball screw (In-line)		Ball screw + Belt [Pulley ratio 1.25:1]		Ball screw	
	Guide type		Linear guide (Circulating type)					
	Operating temperature range [°C]		5 to 40					
	Operating humidity range [%RH]		90 or less (No condensation)					
	Enclosure		IP40 (Excludes motor mounting part)					
Other specifications*6	Actuation unit weight [kg]	50 st	0.585		1.21			
		100 st	0.919		1.68			
		150 st	—		2.19			
	Other inertia [kg·cm²]		0.012 (LESYH16) 0.015 (LESYH16D)		0.035 (LESYH25) 0.061 (LESYH25D)			
	Friction coefficient		0.05					
	Mechanical efficiency		0.8					
Reference motor specifications	Motor type		AC servo motor					
	Rated output capacity [W]		100		200			
	Rated torque [N·m]		0.32		0.64			
	Rated rotation [rpm]		3000					

*1 This is the max. value of the horizontal work load. An external guide is necessary to support the load (Friction coefficient of guide: 0.1 or less). The actual work load changes according to the condition of the external guide. Confirm the load using the actual device.
*2 The force setting range for the force control (Speed control mode, Torque control mode)
The force changes according to the set value. Set it with reference to the "Force Conversion Graph (Guide)" on page 201.
*3 The allowable collision speed for collision with the workpiece
*4 A reference value for correcting errors in reciprocal operation
*5 Impact resistance: No malfunction occurred when the actuator was tested with a drop tester in both an axial direction and a perpendicular direction to the lead screw. (The test was performed with the actuator in the initial state.)
Vibration resistance: No malfunction occurred in a test ranging between 45 to 2000 Hz. The test was performed in both an axial direction and a perpendicular direction to the lead screw. (The test was performed with the actuator in the initial state.)
*6 Each value is only to be used as a guide to select a motor of the appropriate capacity.

Weight

[kg]

Model	Stroke		
	50	100	150
LESYH16	1.48	1.87	—
LESYH25	2.77	3.37	4.77

Dimensions

LESYH16D□-□

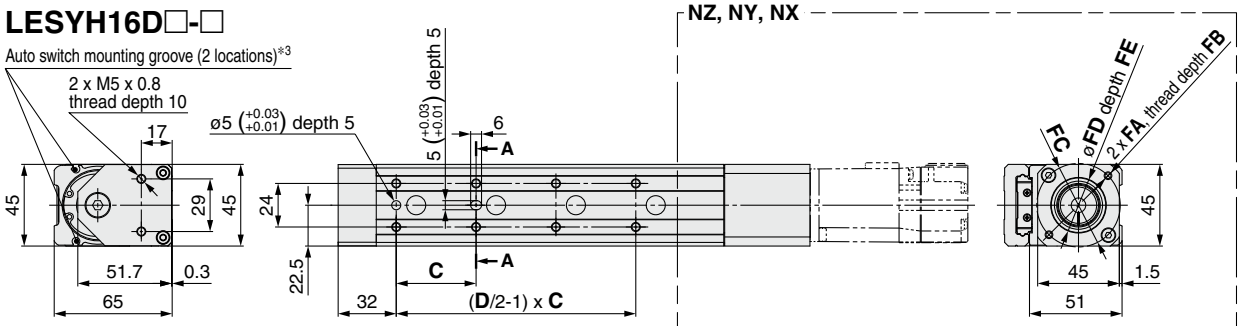

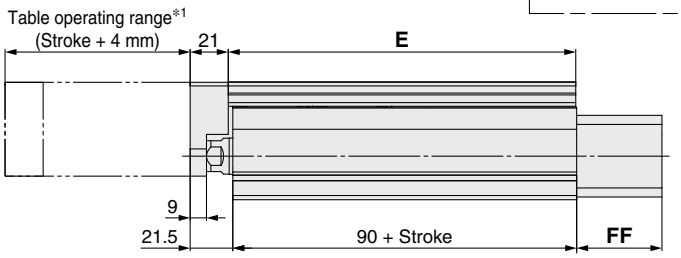

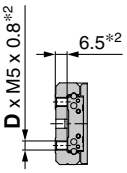

A-A

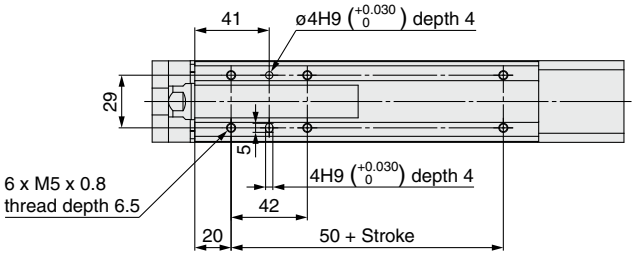

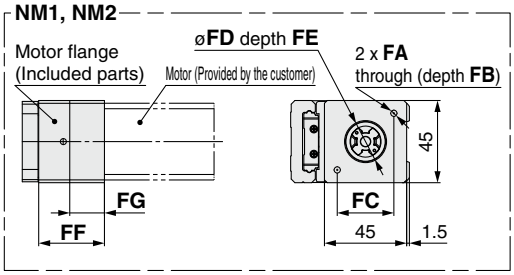

Dimensions [mm]

Model	Stroke	C	D	E
LESYH16□□-50	50	40	6	116.5
LESYH16□□-100	100	44	8	191.5

Applicable motor dimensions

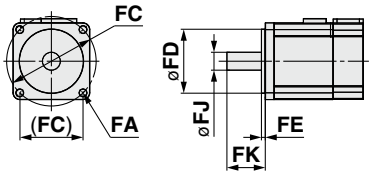

Motor Mounting Position: In-line/Motor Mounting, Applicable Motor Dimensions [mm]

Size	Mounting type	FA		FB	FC	FD	FE (Max.)	FF	FG	FJ	FK
		Mounting type	Applicable motor								
LESYH16	NZ	M4 x 0.7	ø4.5	7.5	ø46	30	3.7	47	—	8	25 ±1
	NY	M3 x 0.5	ø3.4	6	ø45	30	4.2	47	—	8	25 ±1
	NX	M4 x 0.7	ø4.5	7.5	ø46	30	3.7	47	—	8	18 ±1
	NM1	ø3.4	M3	17	□31	22	2.5	36	19	5*2	18 to 25
	NM2	ø3.4	M3	28	□31	22*1	2.5*1	47	30	6*2	20 ±1

*1 Dimensions after mounting a ring spacer (Refer to page 210.) *2 Shaft type: D-cut shaft

Motor mounting position: Right side parallel
LESYH16RN□-□

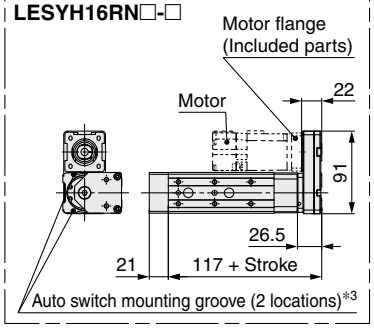

Motor mounting position: Left side parallel
LESYH16LN□-□

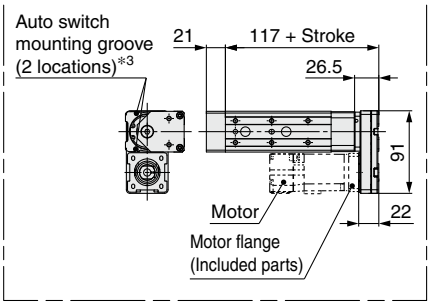

Motor flange dimensions (Motor mounting position: Parallel)

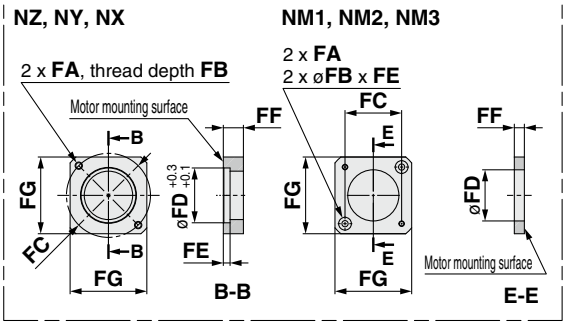

*1 Do not allow collisions at either end of the table operating range at a speed exceeding "pushing speed." Additionally, when running the positioning operation, do not set within 2 mm of both ends.
*2 If the workpiece retaining screws are too long, they may come in contact with the guide block, resulting in a malfunction. Use screws of a length equal to or shorter than the thread length.
*3 For checking the limit and the intermediate signal. Applicable to the D-M9□, D-M9□E, and D-M9□W (2-color indicator) The auto switches should be ordered separately.

Motor Mounting Position: Parallel/Motor Mounting, Applicable Motor Dimensions [mm]

Size	Mounting type	FA		FB	FC	FD	FE (Max.)	FF	FG	FJ	FK
		Mounting type	Applicable motor								
LESYH16	NZ	M4 x 0.7	ø4.5	7.5	ø46	30	3.7	11	42	8	25 ±1
	NY	M3 x 0.5	ø3.4	5.5	ø45	30	5	11	38	8	25 ±1
	NX	M4 x 0.7	ø4.5	7	ø46	30	3.7	8	42	8	18 ±1
	NM1	ø3.4	M3	7	□31	28	3.5	8.5	42	5*1	18 to 25
	NM2	ø3.4	M3	7	□31	28	3.5	8.5	42	6	20 ±1
	NM3	ø3.4	M3	7	□31	28	3.5	5.5	42	5*1	20 ±1

*1 Shaft type: D-cut shaft

Dimensions

LESYH25D□-□

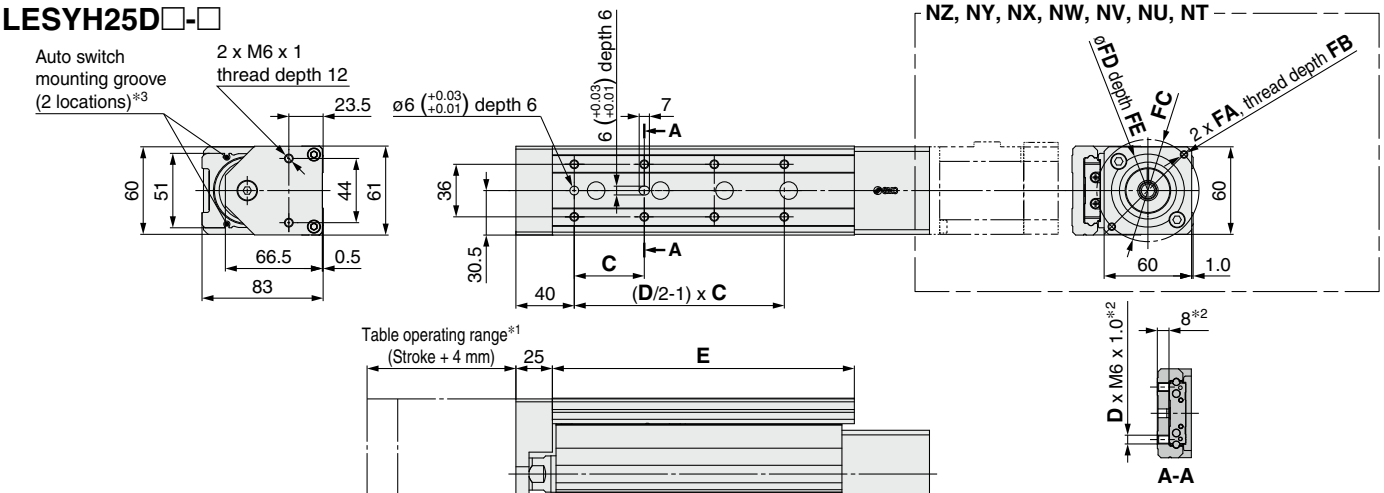

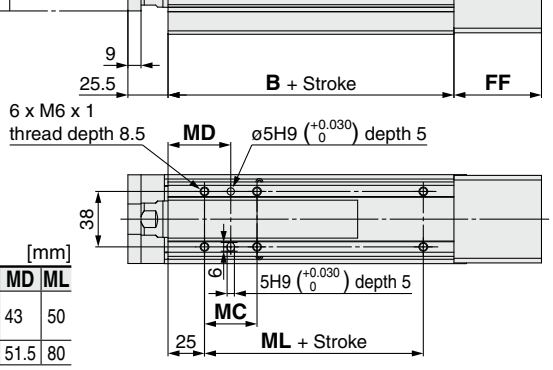

Applicable motor dimensions

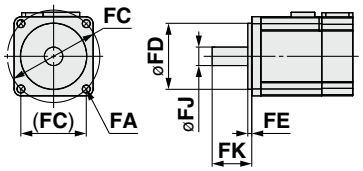

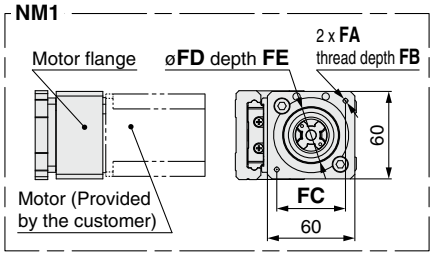

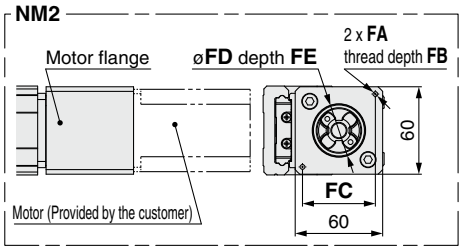

Dimensions [mm]

Model	Stroke	B	C	D	E	G	MC	MD	ML
LESYH25□□-50	50	96.5	75	4	143	131	36	43	50
LESYH25□□-100	100		48	8	207				
LESYH25□□-150	150	126.5	65		285	161	53	51.5	80

Motor Mounting Position: In-line/Motor Mounting, Applicable Motor Dimensions [mm]

Size	Mounting type	FA		FB	FC	FD	FE (Max.)	FF	FJ	FK
		Mounting type	Applicable motor							
LESYH25	NZ	M5 x 0.8	ø5.8	8.5	ø70	50	3.3	60	14	30 ±1
	NY	M4 x 0.7	ø4.5	8	ø70	50	3.3	60	11	30 ±1
	NX	M5 x 0.8	ø5.8	8.5	ø63	40	3.5	63	9	20 ±1
	NW	M5 x 0.8	ø5.8	8.5	ø70	50	3.3	60	9	25 ±1
	NV	M4 x 0.7	ø4.5	8	ø63	40	3.3	63	9	20 ±1
	NU	M5 x 0.8	ø5.8	8.5	ø70	50	3.3	60	11	23 ±1
	NT	M5 x 0.8	ø5.8	8.5	ø70	50	3.3	60	12	30 ±1
	NM1	M4 x 0.7	ø4.5	9.5	□47.1	38.1	2	34	6.35*1	20 ±1
	NM2	M4 x 0.7	ø4.5	8	□50	36	3.3	60	10	24 ±1

*1 Shaft type: D-cut shaft

Motor mounting position: Right side parallel
LESYH25R□-□

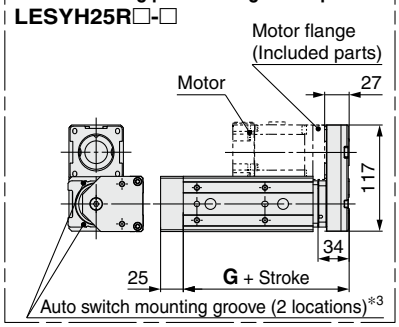

Motor mounting position: Left side parallel
LESYH25L□-□

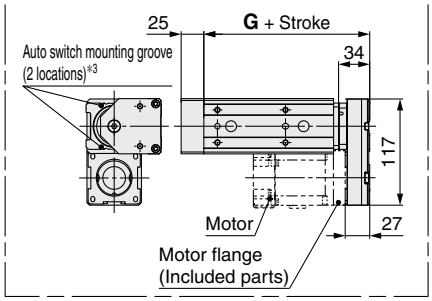

Motor flange dimensions (Motor mounting position: Parallel)

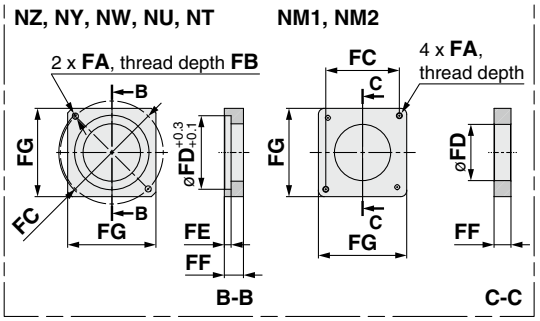

*1 Do not allow collisions at either end of the table operating range at a speed exceeding "pushing speed." Additionally, when running the positioning operation, do not set within 2 mm of both ends.
*2 If the workpiece retaining screws are too long, they may come in contact with the guide block, resulting in a malfunction. Use screws of a length equal to or shorter than the thread length.
*3 For checking the limit and the intermediate signal. Applicable to the D-M9□, D-M9□E, and D-M9□W (2-color indicator) The auto switches should be ordered separately. Refer to pages 215 to 217 for details.

Motor Mounting Position: Parallel/Motor Mounting, Applicable Motor Dimensions [mm]

Size	Mounting type	FA		FB	FC	FD	FE (Max.)	FF	FJ	FK
		Mounting type	Applicable motor							
LESYH25	NZ	M5 x 0.8	ø5.8	8.5	ø70	50	4.6	13	14	30 ±1
	NY	M4 x 0.7	ø4.5	7	ø70	50	4.6	13	11	30 ±1
	NW	M5 x 0.8	ø5.8	8.5	ø70	50	4.6	13	9	25 ±1
	NU	M5 x 0.8	ø5.8	8.5	ø70	50	4.6	13	11	23 ±1
	NT	M5 x 0.8	ø5.8	8.5	ø70	50	4.6	17	12	30 ±1
	NM1	M4 x 0.7	ø4.5	(5)	□47.1	38.1	—	5	6.35*1	20 ±1
	NM2	M4 x 0.7	ø4.5	8	□50	38.1	—	11.5	10	24 ±1

*1 Shaft type: D-cut shaft

- The motor and motor mounting screws should be provided by the customer.
- Motor shaft type should be cylindrical for the NZ, NY, NW, NM2 mounting types, and D-cut type for the NM1 and NM3 mounting type.
- When mounting a pulley, remove all oil content, dust, and dirt adhered to the shaft and the inside of the pulley.
- Take measures to prevent the loosening of the motor mounting screws and hexagon socket head set screws.

Motor Mounting: Parallel

LESYH16/25

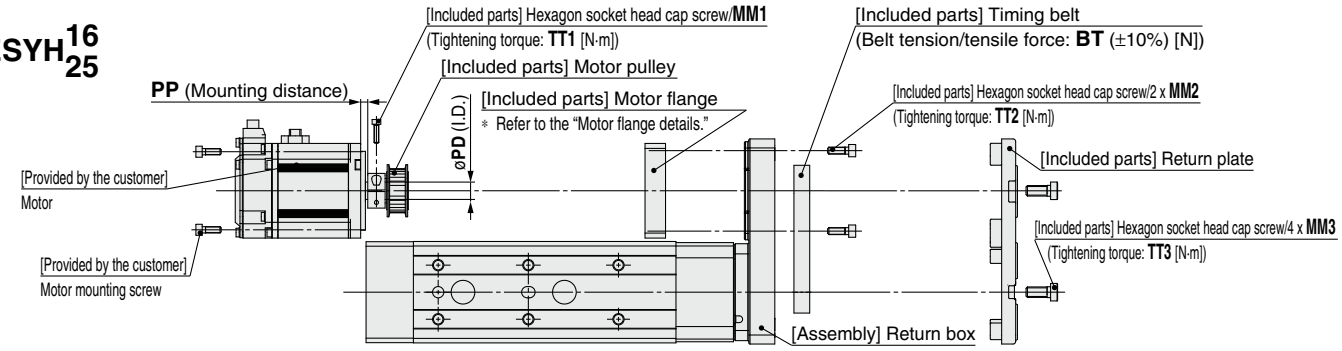

LESYH16: NM1, NM2, NM3

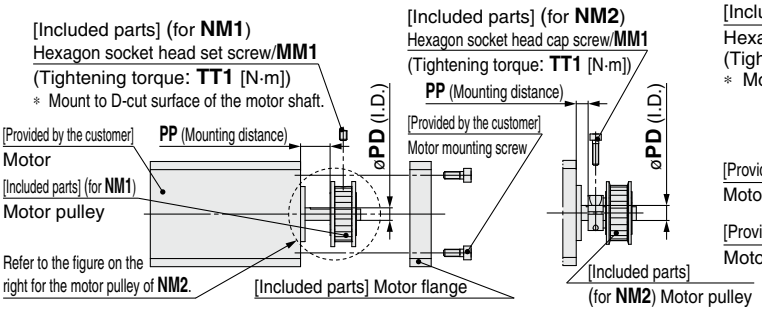

LESYH25: NM1

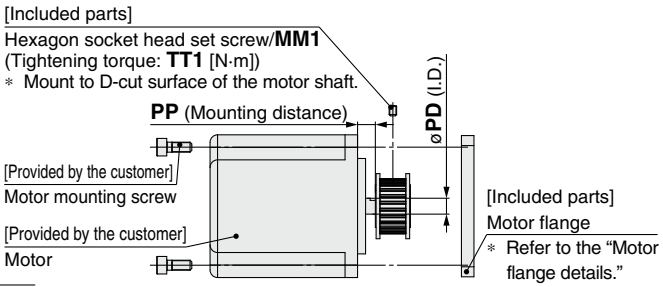

Motor flange details

LESYH16: NZ, NY, NX
LESYH25: NZ, NY, NW, NU, NT

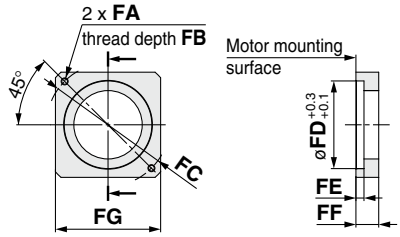

LESYH16: NM1, NM2, NM3

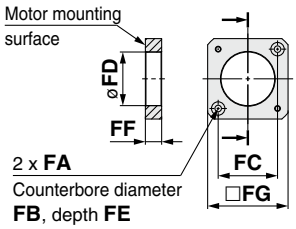

LESYH25: NM1, NM2

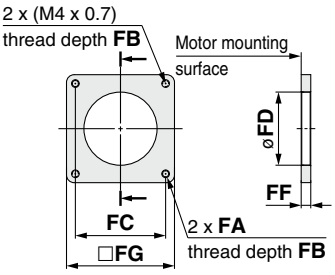

Dimensions

[mm]

Size	Mounting type	MM1	TT1	MM2	TT2	MM3	TT3	PD	PP	FA	FB	FC	FD	FE	FF	FG	BT
16	NZ	M2.5 x 10	1.0	M3 x 8	0.63	M4 x 10	1.5	8	7.5	M4 x 0.7	7.5	ø46	30	3.7	11	42	19
	NY	M2.5 x 10	1.0	M3 x 8	0.63	M4 x 10	1.5	8	7.5	M3 x 0.5	5.5	ø45	30	5	11	38	19
	NX	M2.5 x 10	1.0	M3 x 8	0.63	M4 x 10	1.5	8	4.5	M4 x 0.7	7	ø46	30	3.7	8	42	19
	NM1	M3 x 5	0.63	M3 x 8	0.63	M4 x 10	1.5	5	11.8	ø3.4	7	□31	28	3.5	8.5	42	19
	NM2	M2.5 x 10	1.0	M3 x 8	0.63	M4 x 10	1.5	6	4.8	ø3.4	7	□31	28	3.5	8.5	42	19
	NM3	M3 x 5	0.63	M3 x 8	0.63	M4 x 10	1.5	5	8.8	ø3.4	7	□31	28	3.5	5.5	42	19
25	NZ	M3 x 12	1.5	M4 x 12	1.5	M6 x 14	5.2	14	4.5	M5 x 0.8	8.5	ø70	50	4.6	13	60	30
	NY	M3 x 12	1.5	M4 x 12	1.5	M6 x 14	5.2	11	4.5	M4 x 0.7	7	ø70	50	4.6	13	60	30
	NW	M4 x 12	3.6	M4 x 12	1.5	M6 x 14	5.2	9	4.5	M5 x 0.8	8.5	ø70	50	4.6	13	60	30
	NU	M3 x 12	1.5	M4 x 12	1.5	M6 x 14	5.2	11	4.5	M5 x 0.8	8.5	ø70	50	4.6	13	60	30
	NT	M3 x 12	1.5	M4 x 12	1.5	M6 x 14	5.2	12	8.5	M5 x 0.8	8.5	ø70	50	4.6	17	60	30
	NM1	M3 x 5	0.63	M4 x 12	1.5	M6 x 14	5.2	6.35	8	M4 x 0.7	(5)	□47.1	38.2	—	5	56.4	30
	NM2	M3 x 12	1.5	M4 x 12	1.5	M6 x 14	5.2	10	3	M4 x 0.7	8	□50	38.2	—	11.5	60	30

Motor Mounting Diagram

Mounting procedure

1) Secure the motor pulley to the motor (provided by the customer) with the MM1 hexagon socket head cap screw or hexagon socket head set screw.
2) Secure the motor to the motor flange with the motor mounting screws (provided by the customer).
3) Put the timing belt on the motor pulley and body side pulley, and then secure it temporarily with the MM2 hexagon socket head cap screws. (Refer to the mounting diagram.)
4) Apply the belt tension/tensile force: BT and tighten the timing belt with the MM2 hexagon socket head cap screws. (The reference level is the elimination of the belt deflection.)
5) Secure the return plate with the MM3 hexagon socket head cap screws.

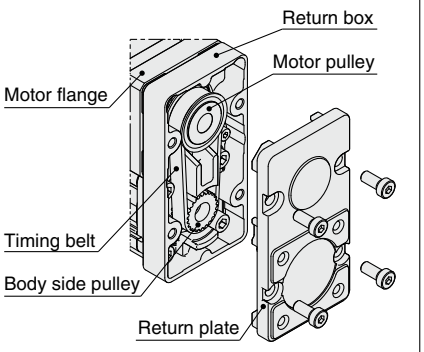

Included Parts List

Size: 16, 25

Description	Quantity	
	Mounting type	
	NZ/NY/NW/NT/NM2	NM1/NM3
Motor flange	1	1
Motor pulley	1	1
Return plate	1	1
Timing belt	1	1
Hexagon socket head cap screw (to mount the return plate)	4	4
Hexagon socket head cap screw (to mount the motor flange)	2	2
Hexagon socket head cap screw (to secure the pulley)	1	—
Hexagon socket head set screw (to secure the pulley)	—	1

Motor Mounting: In-line

- The motor and motor mounting screws should be provided by the customer.
- Motor shaft type should be cylindrical for the NZ, NY, NX, NW, NM2 mounting types, and D-cut type for the NM1 mounting type.
- When mounting a hub, remove all oil content, dust, and dirt adhered to the shaft and the inside of the hub.
- Take measures to prevent the loosening of the motor mounting screws and hexagon socket head set screws.

LESYH$^{16}_{25}$D

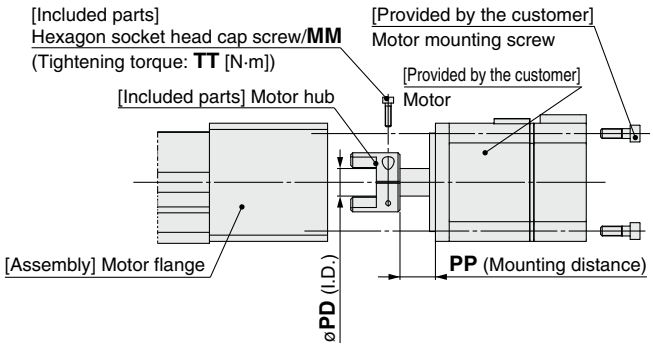

Mounting procedure

1) Secure the motor hub to the motor (provided by the customer) with the MM hexagon socket head cap screw.
2) Check the motor hub position, and then insert it. (Refer to the mounting diagram.)
3) Secure the motor to the motor flange with the motor mounting screws (provided by the customer).

LESYH16D: NM1

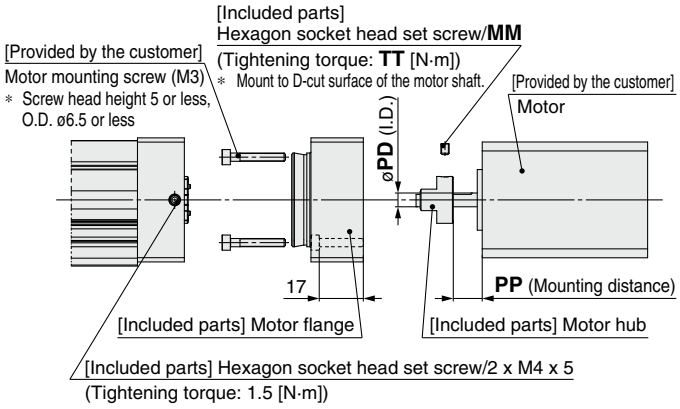

Mounting procedure

1) Secure the motor hub to the motor (provided by the customer) with the M3 x 4 hexagon socket head set screw.
2) Secure the motor to the motor flange with the motor mounting screws (provided by the customer).
3) Check the motor hub position, and then insert it. (Refer to the mounting diagram.)
4) Secure the motor flange with the M4 x 5 hexagon socket head set screws.

LESYH25D: NM1

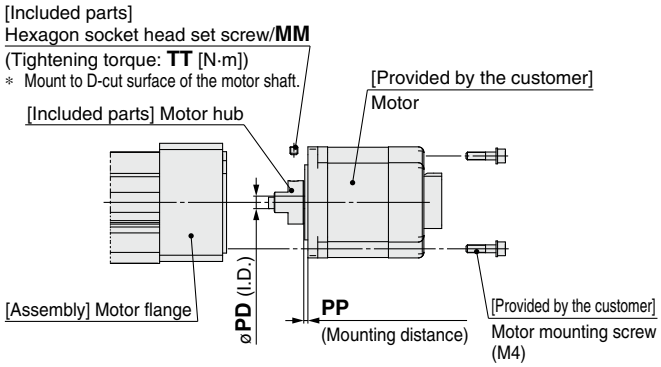

Mounting procedure

1) Secure the motor hub to the motor (provided by the customer) with the MM hexagon socket head set screw.
2) Check the motor hub position, and then insert it. (Refer to the mounting diagram.)
3) Secure the motor to the motor block with the motor mounting screws (provided by the customer).

LESYH16D: NM2

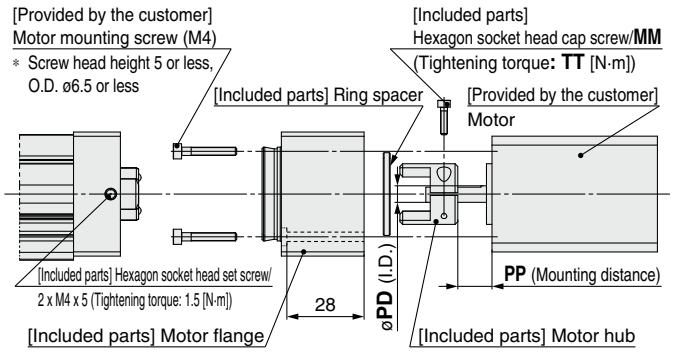

Mounting procedure

1) Insert the ring spacer into the motor (provided by the customer).
2) Secure the motor hub to the motor (provided by the customer) with the M2.5 x 10 hexagon socket head cap screw.
3) Secure the motor to the motor flange with the motor mounting screws (provided by the customer).
4) Check the motor hub position, and then insert it. (Refer to the mounting diagram.)
5) Secure the motor flange with the M4 x 5 hexagon socket head set screws.

Motor Mounting Diagram

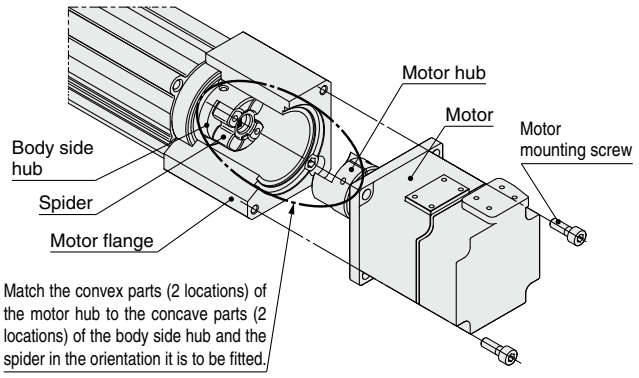

Dimensions

[mm]

Size	Mounting type	MM	TT	PD	PP
16	NZ	M2.5 x 10	1.0	8	12.5
	NY	M2.5 x 10	1.0	8	12.5
	NX	M2.5 x 10	1.0	8	7
	NM1	M3 x 5	0.63	5	10.5
	NM2	M2.5 x 10	1.0	6	12.4
25	NZ	M3 x 12	1.5	14	18
	NY	M4 x 12	3.6	11	18
	NX	M4 x 12	3.6	9	5
	NW	M4 x 12	3.6	9	12
	NV	M4 x 12	3.6	9	5
	NU	M4 x 12	3.6	11	12
	NT	M3 x 12	1.5	12	18
	NM1	M4 x 5	1.5	6.35	2.1
	NM2	M4 x 12	3.6	10	12

Included Parts List

Size: 16

Description	Quantity		
	Mounting type		
	NZ/NY/NX	NM1	NM2
Motor hub	1	1	1
Hexagon socket head cap screw (to secure the hub)	1	—	1
Motor flange	—	1	1
Hexagon socket head set screw (to secure the hub)	—	1	—
Hexagon socket head set screw (to secure the motor flange)		2	2
Ring spacer	—	—	1

Size: 25

Description	Quantity	
	Mounting type	
	NZ/NY/NX/NW/NV/NU/NT/NM2	NM1
Motor hub	1	1
Hexagon socket head cap screw (to secure the hub)	1	—
Hexagon socket head set screw (to secure the hub)	—	1

LESYH Series
Motor Mounting Parts

Motor Flange Option

A motor can be added to the motorless specification after purchase. The applicable mounting types are shown below. (Excludes options "NM1" and "NM3")
Use the following part numbers to select a compatible motor flange option and place an order.

How to Order

LEY-MF 25 P - NZ

❶ ❷ ❸

❶ Size

25	For the LESYH16
32	For the LESYH25

∗ Please note that the size in the model number is different from the actuator size.

❷ Motor mounting position

P	Parallel
D	In-line

❸ Mounting type

NZ	NV
NY	NU
NX	NT
NW	NM2

Compatible Motors and Mounting Types∗2

Applicable motor model		Actuator/Mounting type														
Manufacturer	Series	16						25								
		NZ	NY	NX	NM1	NM2	NM3	NZ	NY	NX	NW	NV	NU	NT	NM1	NM2
Mitsubishi Electric Corporation	MELSERVO JN/J4/J5	●	—	—	—	—	—	●	—	—	—	—	—	—	—	—
YASKAWA Electric Corporation	Σ-V/7/X	●	—	—	—	—	—	●	—	—	—	—	—	—	—	—
SANYO DENKI CO., LTD.	SANMOTION R	●	—	—	—	—	—	●	—	—	—	—	—	—	—	—
OMRON Corporation	OMNUC G5/1S	●	—	—	—	—	—	—	●	—	—	—	—	—	—	—
Panasonic Corporation	MINAS A5/A6	●	●	—	—	—	—	—	●	—	—	—	—	—	—	—
FANUC CORPORATION	βis (-B)	●	—	—	—	—	—	● (β1 only)	—	—	●	—	—	—	—	—
NIDEC SANKYO CORPORATION	S-FLAG	●	—	—	—	—	—	●	—	—	—	—	—	—	—	—
KEYENCE CORPORATION	SV/SV2	●	—	—	—	—	—	●	—	—	—	—	—	—	—	—
FUJI ELECTRIC CO., LTD.	ALPHA7	●	—	—	—	—	—	●	—	—	—	—	—	—	—	—
MinebeaMitsumi Inc.	Hybrid stepping motors	—	—	—	●	—	●	—	—	—	—	—	—	—	●	—
Shinano Kenshi Co., Ltd.	CSB-BZ	—	—	—	●	—	●	—	—	—	—	—	—	—	—	—
ORIENTAL MOTOR Co., Ltd.	α STEP AR/AZ	—	—	—	—	●	—	—	—	—	—	—	—	—	—	●
FASTECH Co., Ltd.	Ezi-SERVO	—	—	—	●	—	—	—	—	—	—	—	—	—	●	—
Rockwell Automation, Inc. (Allen-Bradley)	Kinetix MP/VP/TL	●	—	—	—	—	—	—	—	●∗1 (MP/VP only)	—	—	—	●	—	—
Beckhoff Automation GmbH	AM 30/31/80/81	●	—	—	—	—	—	—	—	●∗1 (80/81 only)	—	●∗1	●	—	—	—
Siemens AG	SIMOTICS S-1FK7	—	—	●	—	—	—	—	—	●∗1	—	—	—	—	—	—
Delta Electronics, Inc.	ASDA-A2	●	—	—	—	—	—	●	—	—	—	—	—	—	—	—
ANCA Motion	AMD2000	●	—	—	—	—	—	●	—	—	—	—	—	—	—	—

∗ When the LESYH$^{16}_{25}$□$^{NM1}_{NM3}$□-□ is purchased, it is not possible to change to other mounting types.

∗1 Motor mounting position: In-line only
∗2 The compatible motors and mounting types are typical examples. Select the mounting type after referring to the "Motor Mounting, Applicable Motor Dimensions" tables on the following actuator body "Dimensions" pages.

Dimensions: Motor Flange Option

Motor mounting position: Parallel

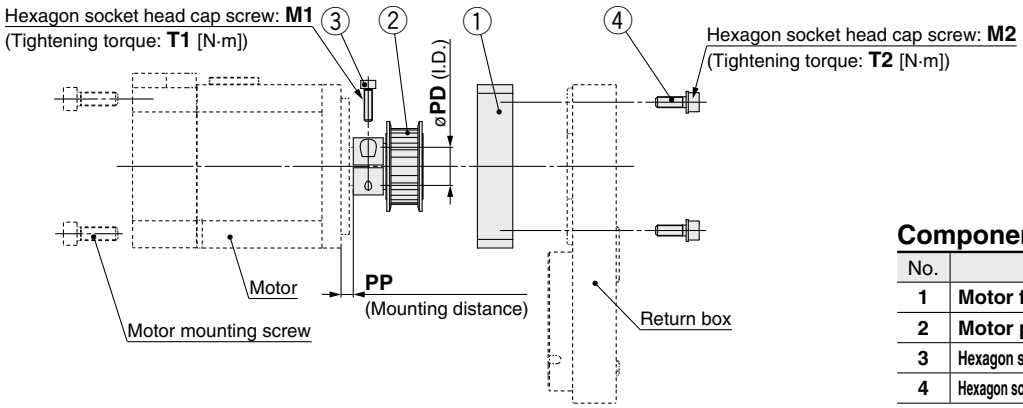

Component Parts

No.	Description	Quantity
1	**Motor flange**	1
2	**Motor pulley**	1
3	Hexagon socket head cap screw (to secure the pulley)	1
4	Hexagon socket head cap screw (to mount the motor flange)	2

Motor flange details

Size: 25, 32

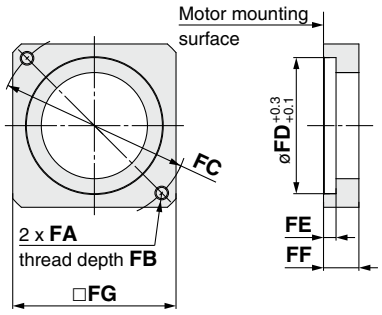

Size 25: NM2

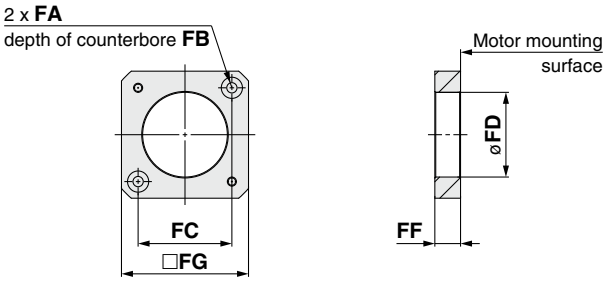

Size 32: NM2

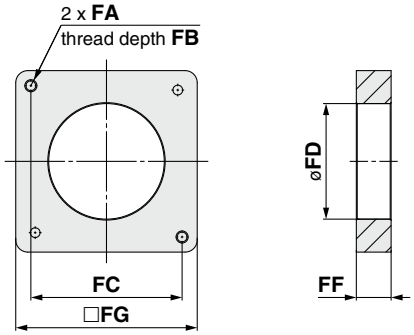

Dimensions

[mm]

Size	Mounting type	FA	FB	FC	FD	FE	FF	FG	M1	T1	M2	T2	PD	PP
25 (LESYH16)	NZ	M4 x 0.7	7.5	ø46	30	3.7	11	42	M2.5 x 10	1.0	M3 x 8	0.63	8	7.5
	NY	M3 x 0.5	5.5	ø45	30	5	11	42	M2.5 x 10	1.0	M3 x 8	0.63	8	7.5
	NX	M4 x 0.7	7	ø46	30	3.7	8	42	M2.5 x 10	1.0	M3 x 8	0.63	8	4.5
	NM2	ø3.4	7	□31	30	3.7	8.5	42	M2.5 x 10	1.0	M3 x 8	0.63	6	4.8
32 (LESYH25)	NZ	M5 x 0.8	8.5	ø70	50	4.6	13	60	M3 x 12	1.5	M4 x 12	1.5	14	4.5
	NY	M4 x 0.7	7	ø70	50	4.6	13	60	M3 x 12	1.5	M4 x 12	1.5	11	4.5
	NW	M5 x 0.8	8.5	ø70	50	4.6	13	60	M4 x 12	3.6	M4 x 12	1.5	9	4.5
	NU	M5 x 0.8	8.5	ø70	50	4.6	13	60	M3 x 12	1.5	M4 x 12	1.5	11	4.5
	NT	M5 x 0.8	8.5	ø70	50	4.6	17	60	M3 x 12	1.5	M4 x 12	1.5	12	8.5
	NM2	M4 x 0.7	8	□50	38.2	—	11.5	60	M3 x 12	1.5	M4 x 12	1.5	10	3

Dimensions: Motor Flange Option

Motor mounting position: In-line

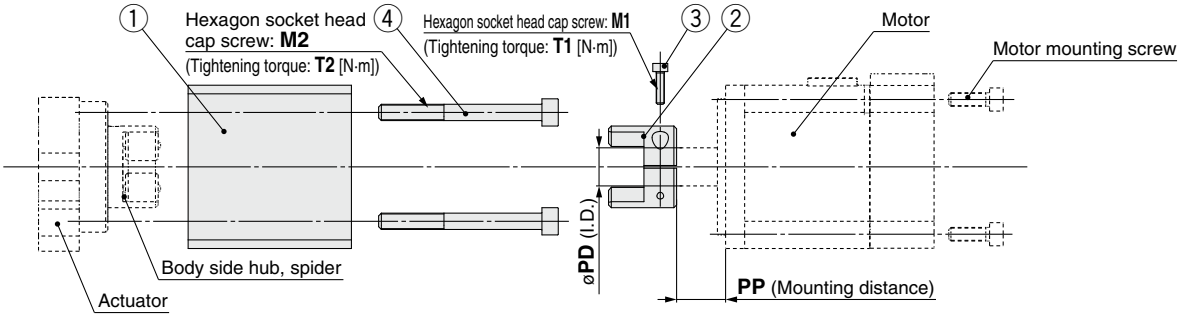

Motor flange details

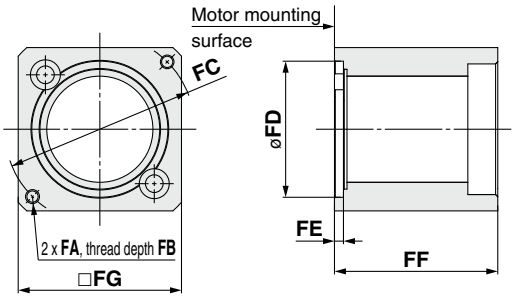

Component Parts

No.	Description	Quantity
1	**Motor flange**	1
2	**Motor hub**	1
3	**Hexagon socket head cap screw (to secure the hub)**	1
4	**Hexagon socket head cap screw (to mount the motor block)**	2

Size: 25, Mounting type: NM2

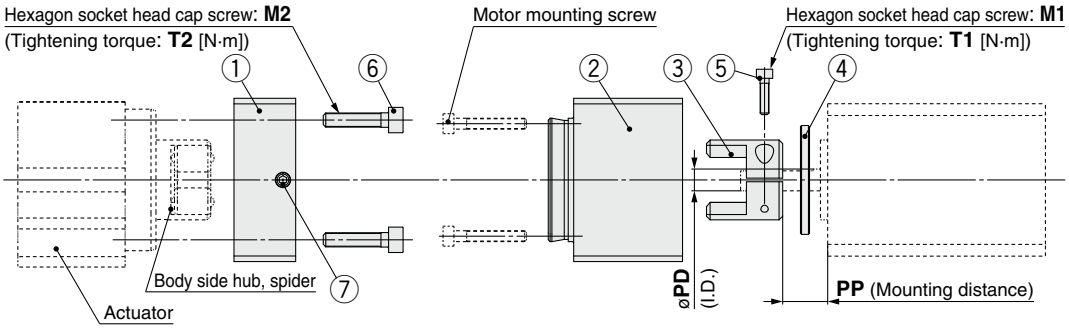

Motor flange B details

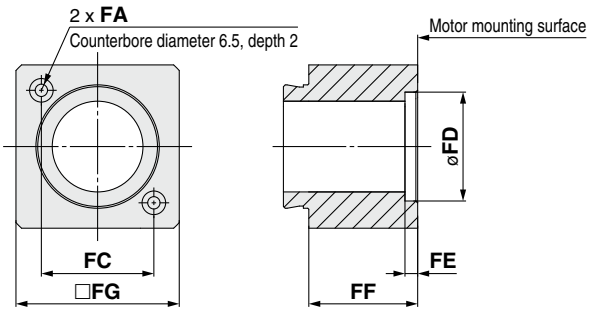

Component Parts

No.	Description	Quantity
1	**Motor flange A**	1
2	**Motor flange B**	1
3	**Motor hub**	1
4	**Ring spacer**	1
5	**Hexagon socket head cap screw (to secure the hub)**	1
6	**Hexagon socket head cap screw (to mount the motor flange A)**	2
7	**Hexagon socket head set screw (to secure the motor flange B)**	2

Dimensions

[mm]

Size	Mounting type	FA	FB	FC	FD	FE	FF	FG	M1	T1	M2	T2	PD	PP
25 (LESYH16)	**NZ**	M4 x 0.7	7.5	ø46	30	3.7	47	45	M2.5 x 10	1.0	M4 x 40	1.5	8	12.5
	NY	M3 x 0.5	6	ø45	30	4.2	47	45	M2.5 x 10	1.0	M4 x 40	1.5	8	12.5
	NX	M4 x 0.7	7.5	ø46	30	3.7	47	45	M2.5 x 10	1.0	M4 x 40	1.5	8	7
	NM2	ø3.4	28	□31	22	2.5	30	45	M2.5 x 10	1.0	M4 x 40	1.5	6	12.4
32 (LESYH25)	**NZ**	M5 x 0.8	8.5	ø70	50	3.3	60	60	M3 x 12	1.5	M6 x 60	5.2	14	18
	NY	M4 x 0.7	8	ø70	50	3.3	60	60	M4 x 12	3.6	M6 x 60	5.2	11	18
	NX	M5 x 0.8	8.5	ø63	40	3.5	63	60	M4 x 12	3.6	M6 x 60	5.2	9	5
	NW	M5 x 0.8	8.5	ø70	50	3.3	60	60	M4 x 12	3.6	M6 x 60	5.2	9	12
	NV	M4 x 0.7	8	ø63	40	3.3	63	60	M4 x 12	3.6	M6 x 60	5.2	9	5
	NU	M5 x 0.8	8.5	ø70	50	3.3	60	60	M4 x 12	3.6	M6 x 60	5.2	11	12
	NT	M5 x 0.8	8.5	ø70	50	3.3	60	60	M3 x 12	1.5	M6 x 60	5.2	12	18
	NM2	M4 x 0.7	8	□50	36	3.3	60	60	M4 x 12	3.6	M6 x 60	5.2	10	12

Auto Switch Mounting

Auto Switch Mounting Position

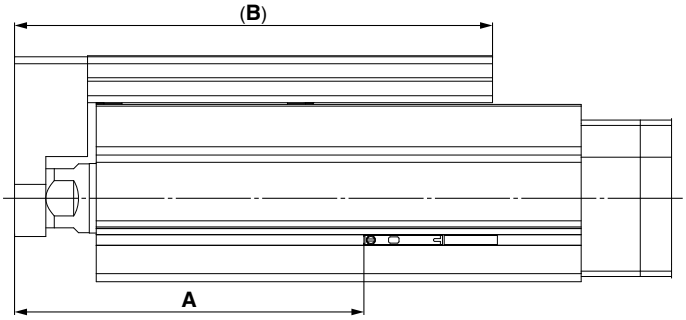

[mm]

Size	Stroke	A	B
8	50	89	126
	75	114	152
16	50	100.5	137.5
	100	150.5	212.5
25	50	108	168
	100	158	232
	150	238	310

Auto Switch Mounting

When mounting the auto switches, they should be inserted into the actuator's auto switch mounting groove as shown in the drawing below.

After setting in the mounting position, use a flat head watchmaker's screwdriver to tighten the auto switch mounting screw that is included.

Auto Switch Mounting Screw Tightening Torque

[N·m]

Auto switch model	Tightening torque
D-M9□(V) **D-M9□W(V)** **D-M9□E**	0.05 to 0.15

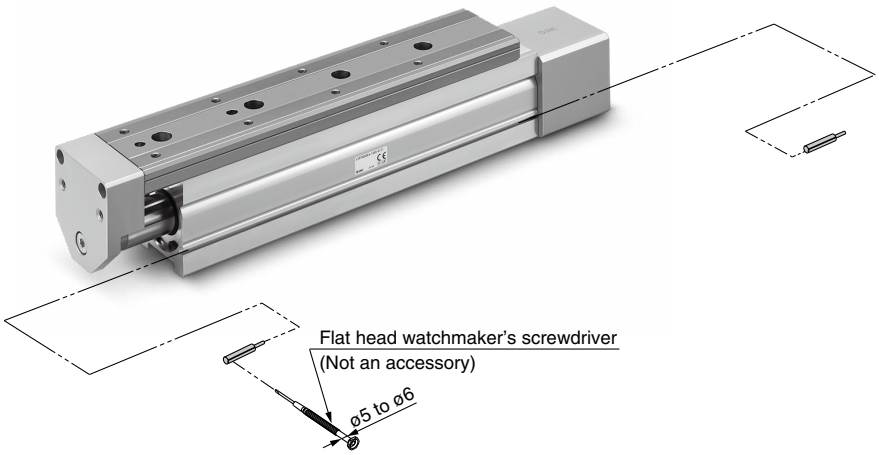

∗ When tightening the auto switch mounting screw (included with auto switch), use a watchmaker's screwdriver with a handle diameter of about 5 to 6 mm.

Solid State Auto Switch Direct Mounting Type
D-M9N(V)/D-M9P(V)/D-M9B(V)

Refer to the SMC website for details on products that are compliant with international standards.

Grommet

- **2-wire load current is reduced (2.5 to 40 mA).**
- **Using flexible cable as standard spec.**

⚠Caution

Precautions

Fix the auto switch with the existing screw installed on the auto switch body. The auto switch may be damaged if a screw other than the one supplied is used.

Auto Switch Specifications

PLC: Programmable Logic Controller

D-M9□, D-M9□V (With indicator light)						
Auto switch model	**D-M9N**	**D-M9NV**	**D-M9P**	**D-M9PV**	**D-M9B**	**D-M9BV**
Electrical entry direction	In-line	Perpendicular	In-line	Perpendicular	In-line	Perpendicular
Wiring type	3-wire				2-wire	
Output type	NPN		PNP		—	
Applicable load	IC circuit, Relay, PLC				24 VDC relay, PLC	
Power supply voltage	5, 12, 24 VDC (4.5 to 28 V)				—	
Current consumption	10 mA or less				—	
Load voltage	28 VDC or less		—		24 VDC (10 to 28 VDC)	
Load current	40 mA or less				2.5 to 40 mA	
Internal voltage drop	0.8 V or less at 10 mA (2 V or less at 40 mA)				4 V or less	
Leakage current	100 μA or less at 24 VDC				0.8 mA or less	
Indicator light	Red LED illuminates when turned ON.					
Standards	CE/UKCA marking					

Oilproof Flexible Heavy-duty Lead Wire Specifications

Auto switch model		**D-M9N(V)**	**D-M9P(V)**	**D-M9B(V)**
Sheath	Outside diameter [mm]	ø2.6		
Insulator	Number of cores	3 cores (Brown/Blue/Black)		2 cores (Brown/Blue)
	Outside diameter [mm]	ø0.88		
Conductor	Effective area [mm²]	0.15		
	Strand diameter [mm]	ø0.05		
Min. bending radius [mm] (Reference values)		17		

∗ Refer to the **Web Catalog** for solid state auto switch common specifications.
∗ Refer to the **Web Catalog** for lead wire lengths.

Weight

[g]

Auto switch model		**D-M9N(V)**	**D-M9P(V)**	**D-M9B(V)**
Lead wire length	0.5 m (**Nil**)	8		7
	1 m (**M**)	14		13
	3 m (**L**)	41		38
	5 m (**Z**)	68		63

Dimensions

[mm]

D-M9□

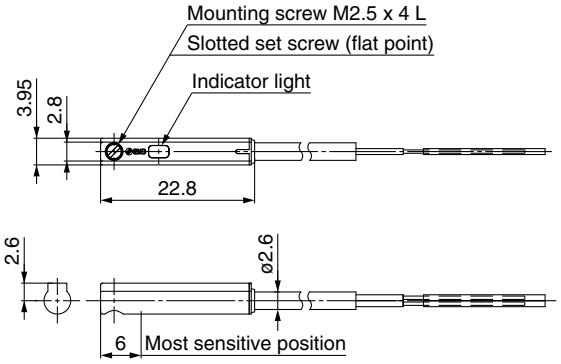

D-M9□V

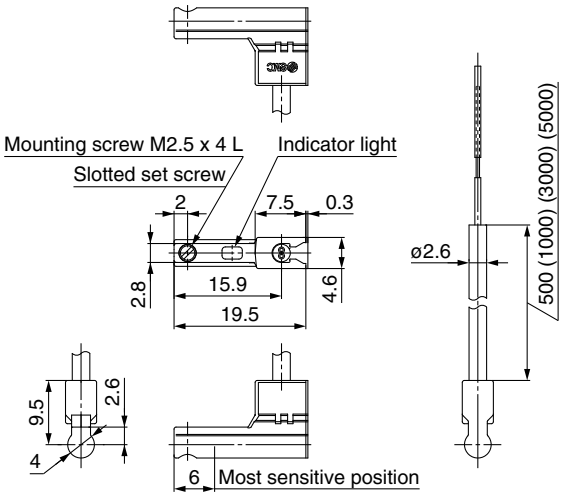

Normally Closed Solid State Auto Switch Direct Mounting Type
D-M9NE(V)/D-M9PE(V)/D-M9BE(V)

Refer to the SMC website for details on products that are compliant with international standards.

Grommet

- **Output signal turns on when no magnetic force is detected.**
- **Can be used for the actuator adopted by the solid state auto switch D-M9 series (excluding special order products)**

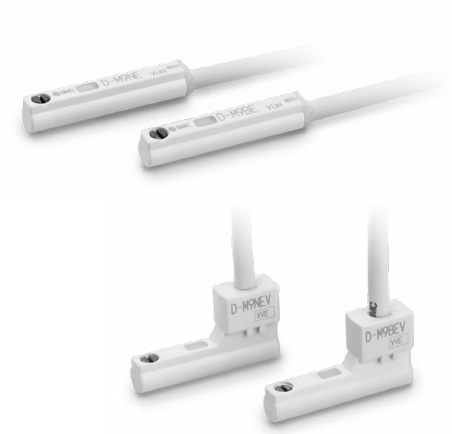

⚠Caution

Precautions

Fix the auto switch with the existing screw installed on the auto switch body. The auto switch may be damaged if a screw other than the one supplied is used.

Auto Switch Specifications

PLC: Programmable Logic Controller

D-M9□E, D-M9□EV (With indicator light)						
Auto switch model	D-M9NE	D-M9NEV	D-M9PE	D-M9PEV	D-M9BE	D-M9BEV
Electrical entry direction	In-line	Perpendicular	In-line	Perpendicular	In-line	Perpendicular
Wiring type	3-wire				2-wire	
Output type	NPN		PNP		—	
Applicable load	IC circuit, Relay, PLC				24 VDC relay, PLC	
Power supply voltage	5, 12, 24 VDC (4.5 to 28 V)				—	
Current consumption	10 mA or less				—	
Load voltage	28 VDC or less		—		24 VDC (10 to 28 VDC)	
Load current	40 mA or less				2.5 to 40 mA	
Internal voltage drop	0.8 V or less at 10 mA (2 V or less at 40 mA)				4 V or less	
Leakage current	100 μA or less at 24 VDC				0.8 mA or less	
Indicator light	Red LED illuminates when turned ON.					
Standards	CE/UKCA marking					

Oilproof Flexible Heavy-duty Lead Wire Specifications

Auto switch model		D-M9NE(V)	D-M9PE(V)	D-M9BE(V)
Sheath	Outside diameter [mm]	ø2.6		
Insulator	Number of cores	3 cores (Brown/Blue/Black)		2 cores (Brown/Blue)
	Outside diameter [mm]	ø0.88		
Conductor	Effective area [mm²]	0.15		
	Strand diameter [mm]	ø0.05		
Min. bending radius [mm] (Reference values)		17		

∗ Refer to the **Web Catalog** for solid state auto switch common specifications.
∗ Refer to the **Web Catalog** for lead wire lengths.

Weight

[g]

Auto switch model		D-M9NE(V)	D-M9PE(V)	D-M9BE(V)
Lead wire length	0.5 m (**Nil**)	8		7
	1 m (**M**)∗1	14		13
	3 m (**L**)	41		38
	5 m (**Z**)∗1	68		63

∗1 The 1 m and 5 m options are produced upon receipt of order.

Dimensions

[mm]

D-M9□E

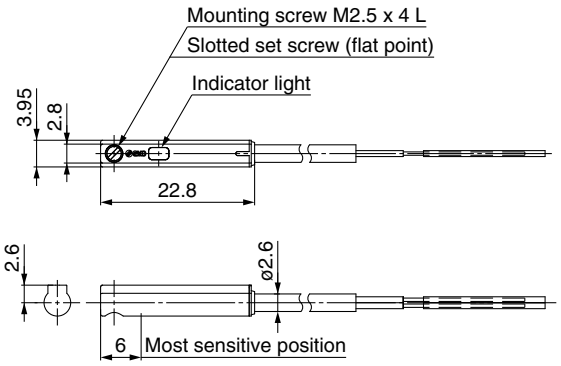

D-M9□EV

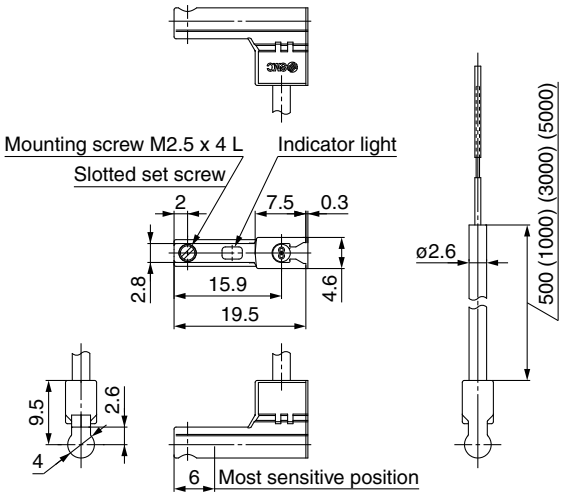

2-Color Indicator Solid State Auto Switch Direct Mounting Type
D-M9NW(V)/D-M9PW(V)/D-M9BW(V)

Refer to the SMC website for details on products that are compliant with international standards.

Grommet

- **2-wire load current is reduced (2.5 to 40 mA).**
- **Using flexible cable as standard spec.**
- **The proper operating range can be determined by the color of the light. (Red → Green ← Red)**

⚠Caution

Precautions

Fix the auto switch with the existing screw installed on the auto switch body. The auto switch may be damaged if a screw other than the one supplied is used.

Auto Switch Specifications

PLC: Programmable Logic Controller

D-M9□W, D-M9□WV (With indicator light)						
Auto switch model	D-M9NW	D-M9NWV	D-M9PW	D-M9PWV	D-M9BW	D-M9BWV
Electrical entry direction	In-line	Perpendicular	In-line	Perpendicular	In-line	Perpendicular
Wiring type	3-wire				2-wire	
Output type	NPN		PNP		—	
Applicable load	IC circuit, Relay, PLC				24 VDC relay, PLC	
Power supply voltage	5, 12, 24 VDC (4.5 to 28 V)				—	
Current consumption	10 mA or less				—	
Load voltage	28 VDC or less		—		24 VDC (10 to 28 VDC)	
Load current	40 mA or less				2.5 to 40 mA	
Internal voltage drop	0.8 V or less at 10 mA (2 V or less at 40 mA)				4 V or less	
Leakage current	100 μA or less at 24 VDC				0.8 mA or less	
Indicator light	Operating range ····· Red LED illuminates. Proper operating range ····· Green LED illuminates.					
Standards	CE/UKCA marking					

Oilproof Flexible Heavy-duty Lead Wire Specifications

Auto switch model		D-M9NW(V)	D-M9PW(V)	D-M9BW(V)
Sheath	Outside diameter [mm]	ø2.6		
Insulator	Number of cores	3 cores (Brown/Blue/Black)		2 cores (Brown/Blue)
	Outside diameter [mm]	ø0.88		
Conductor	Effective area [mm²]	0.15		
	Strand diameter [mm]	ø0.05		
Min. bending radius [mm] (Reference values)		17		

∗ Refer to the **Web Catalog** for solid state auto switch common specifications.
∗ Refer to the **Web Catalog** for lead wire lengths.

Weight

[g]

Auto switch model		D-M9NW(V)	D-M9PW(V)	D-M9BW(V)
Lead wire length	0.5 m (**Nil**)	8		7
	1 m (**M**)	14		13
	3 m (**L**)	41		38
	5 m (**Z**)	68		63

Dimensions

[mm]

D-M9□W

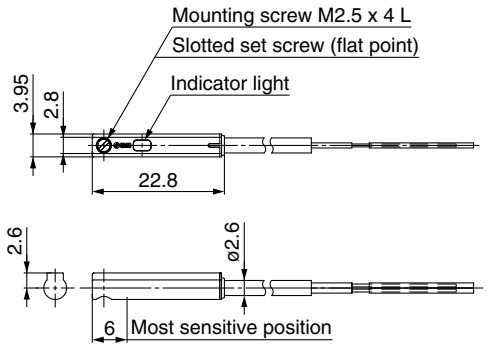

D-M9□WV

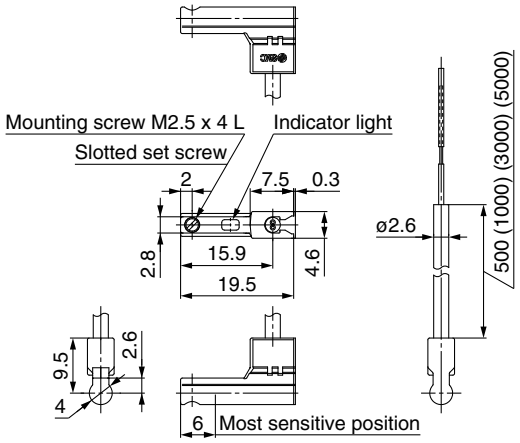

Specific Product Precautions 1

Be sure to read this before handling the products. Refer to the back cover for safety instructions. For electric actuator and auto switch precautions, refer to the "Handling Precautions for SMC Products" and the "Operation Manual" on the SMC website: https://www.smcworld.com

Design

⚠Warning

1. Do not apply a load in excess of the specification limits.

Select a suitable actuator by work load and allowable moment. If the product is used outside of the specification limits, the eccentric load applied to the guide will be excessive and have adverse effects such as the generation of play on the guide, reduced accuracy, reduced service life of the product.

2. Do not use the product in applications where excessive external force or impact force is applied to it.

This can cause a malfunction.

Handling

⚠Caution

1. When lining up actuators

SMC actuators can be used with their motors (provided by the customer) adjacent to each other. However, for actuators with a built-in auto switch magnet, maintain a space of 40 mm or more between the motors and the position where the magnet passes.

Refer to the construction drawings in the catalog for the magnet position.

○ Can be used with their motors adjacent to each other

✕ Do not allow the motors to be in close proximity to the position where the magnet passes.

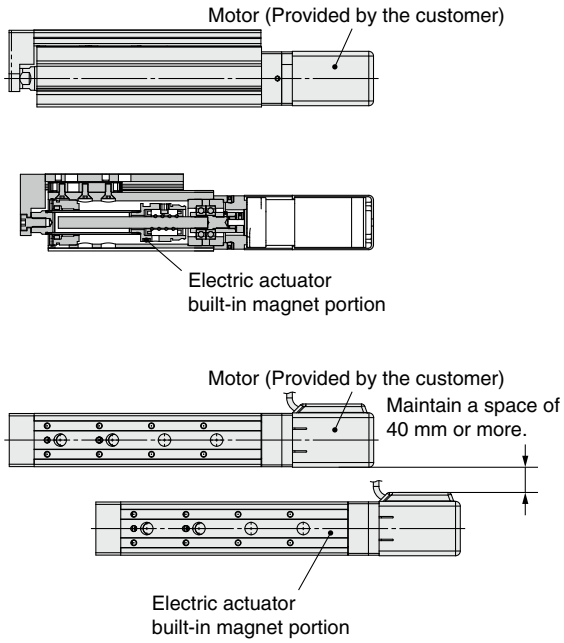

2. Do not dent, scratch, or cause other damage to the body, table and end plate mounting surfaces.

Doing so may cause unevenness in the mounting surface, play in the guide, or an increase in the sliding resistance.

Handling

⚠Caution

3. Do not dent, scratch or cause other damage to the surface over which the rail and guide will move.

Doing so may cause play or an increase in the sliding resistance.

4. Do not apply strong impact or an excessive moment while mounting a workpiece.

If an external force over the allowable moment is applied, it may cause play in the guide or an increase in the sliding resistance.

5. Keep the flatness of mounting surface within 0.02 mm.

If a workpiece or base does not sit evenly on the body of the product, play in the guide or an increase in the sliding resistance may occur. Do not deform the mounting surface by mounting with workpieces tucked in.

6. Do not drive the main body with the table fixed.

7. When mounting the product, use screws of adequate length and tighten them to the maximum torque or less.

Tightening the screws with a higher torque than recommended may result in a malfunction, while tightening with a lower torque can result in the displacement of the mounting position or, in extreme conditions, the actuator could become detached from its mounting position.

Body fixed/ Side mounting (Body tapped)

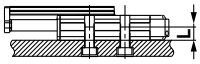

Size	Screw size	Max. tightening torque [N·m]	L (Max. screw-in depth [mm])
8	M4 x 0.7	1.5	5
16	M5 x 0.8	3	6.5
25	M6 x 1	5.2	8.5

Workpiece fixed/Front mounting

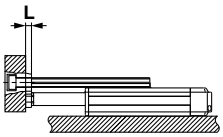

Size	Screw size	Max. tightening torque [N·m]	L [mm]
8	M4 x 0.7	1.5	8
16	M5 x 0.8	3	10
25	M6 x 1	5.2	12

To prevent the workpiece retaining screws from penetrating the end plate, use screws that are 0.5 mm or shorter than the maximum screw-in depth. If long screws are used, they may touch the end plate and cause a malfunction.

Workpiece fixed/Top mounting

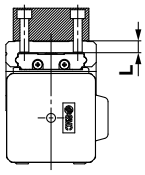

Size	Screw size	Max. tightening torque [N·m]	L [mm]
8	M3 x 0.5	0.63	4.8 (Max.)
16	M5 x 0.8	3	6.5 (Max.)
25	M6 x 1	5.2	8 (Max.)

To prevent the workpiece retaining screws from touching the guide block, use screws that are the maximum screw-in depth or less. If long screws are used, they may touch the guide block and cause a malfunction.

8. When external force is to be applied to the table, it is necessary to reduce the work load for the sizing.

When a cable duct or flexible moving tube is attached to the actuator, the sliding resistance of the table will increase, which may lead to the malfunction of the product.

LESYH Series
Specific Product Precautions 2

Be sure to read this before handling the products. Refer to the back cover for safety instructions. For electric actuator and auto switch precautions, refer to the "Handling Precautions for SMC Products" and the "Operation Manual" on the SMC website: https://www.smcworld.com

Handling

⚠Caution

9. Do not grasp or peel off a masking tape on the bottom of the body.

The masking tape may peel off and foreign matter may get inside the actuator.

10. When the table operates, the gap can be done between actuator (marked with the arrow below). Be careful not to put hands or fingers in a gap.

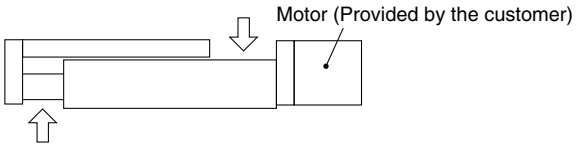

11. Install the body as shown below with the ○.

Since the product support becomes unstable, it may cause a malfunction, noise or an increase in the deflection.

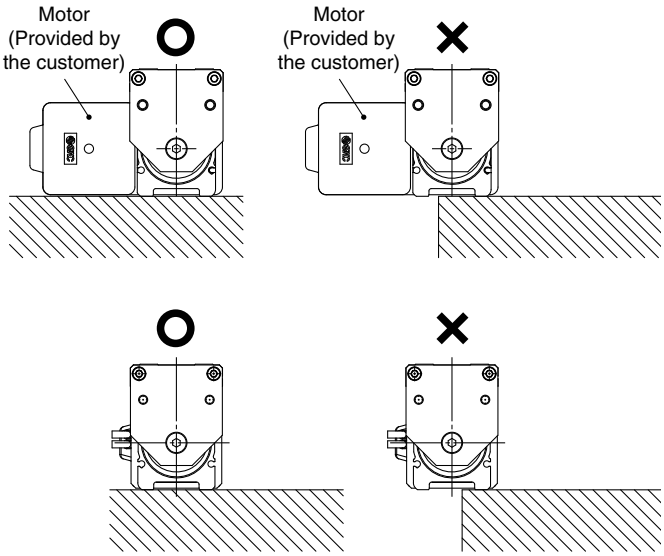

12. Even with the same product number, the table of some products can be moved by hand and the table of some products cannot be moved by hand. However, there is no abnormality with these products. (Without lock)

This difference is caused because there is a little variation with the positive efficiency (when the table is moved by the motor) and there is a large variation with the reverse efficiency (when the table is moved manually) due to the product characteristics. There is hardly any difference among products when they are operated by the motor.

Maintenance

⚠Warning

1. Ensure that the power supply is stopped before starting maintenance work or replacement of the product.

2. For lubrication, wear protective glasses.

3. Perform maintenance according to the following requirements.

Maintenance frequency

Perform maintenance according to the table below.

Frequency	Appearance check	Belt check
Inspection before daily operation	○	—
Inspection every 6 months*1	—	○
Inspection every 250 km*1	—	○
Inspection every 5 million cycles*1	—	○

*1 Select whichever comes first.

- **Items for visual appearance check**

1. Loose set screws, Abnormal amount of dirt, etc.
2. Check for visible damage, Check of cable joint
3. Vibration, Noise

- **Items for belt check (R/L type only)**

Stop operation immediately and replace the belt when any of the following occur.

a. Tooth shape canvas is worn out
Canvas fiber becomes fuzzy, Rubber is coming off and the fiber has become whitish, Lines of fibers have become unclear

b. Peeling off or wearing of the side of the belt
Belt corner has become rounded and frayed threads stick out

c. Belt partially cut
Belt is partially cut, Foreign matter caught in the teeth of other parts is causing damage

d. A vertical line on belt teeth is visible
Damage which is made when the belt runs on the flange

e. Rubber back of the belt is softened and sticky

f . Cracks on the back of the belt are visible

Movement Direction Relative to the Motor Rotation Direction

Slider Type

Applicable models: LEFS□N□, LEKFS□N□, LEJS□N□, LESYH□DN□/Motor mounting position: In-line

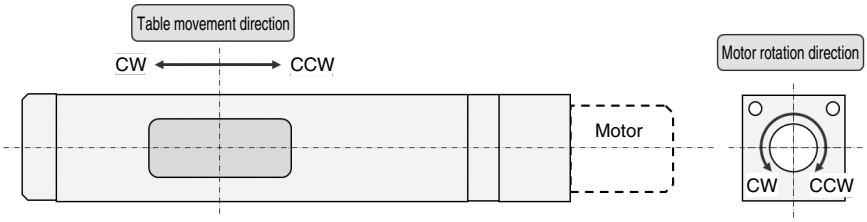

Applicable models: LEFS□(L/R)N□, LEKFS□(L/R)N□, LESYH□(L/R)N□/Motor mounting position: Right/Left side parallel

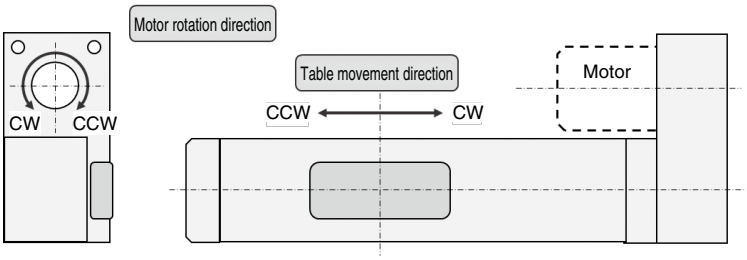

Applicable models: LEFB□N□/Motor mounting position: Top mounting

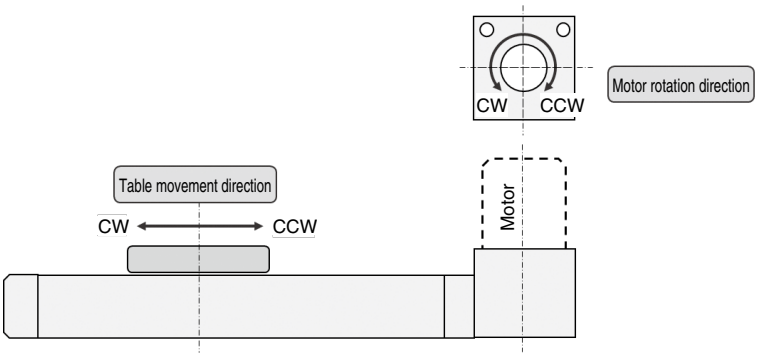

Applicable models: LEFB□UN□/Motor mounting position: Bottom mounting

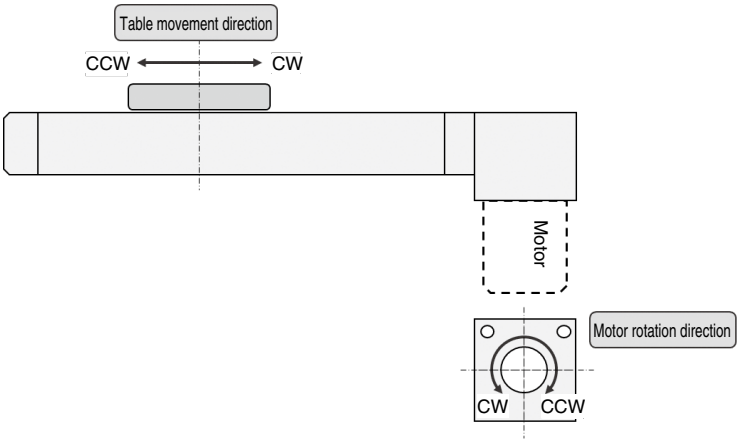

Slider Type

Applicable models: LET□/Motor mounting position: Right/Left/Rear right/Rear left side

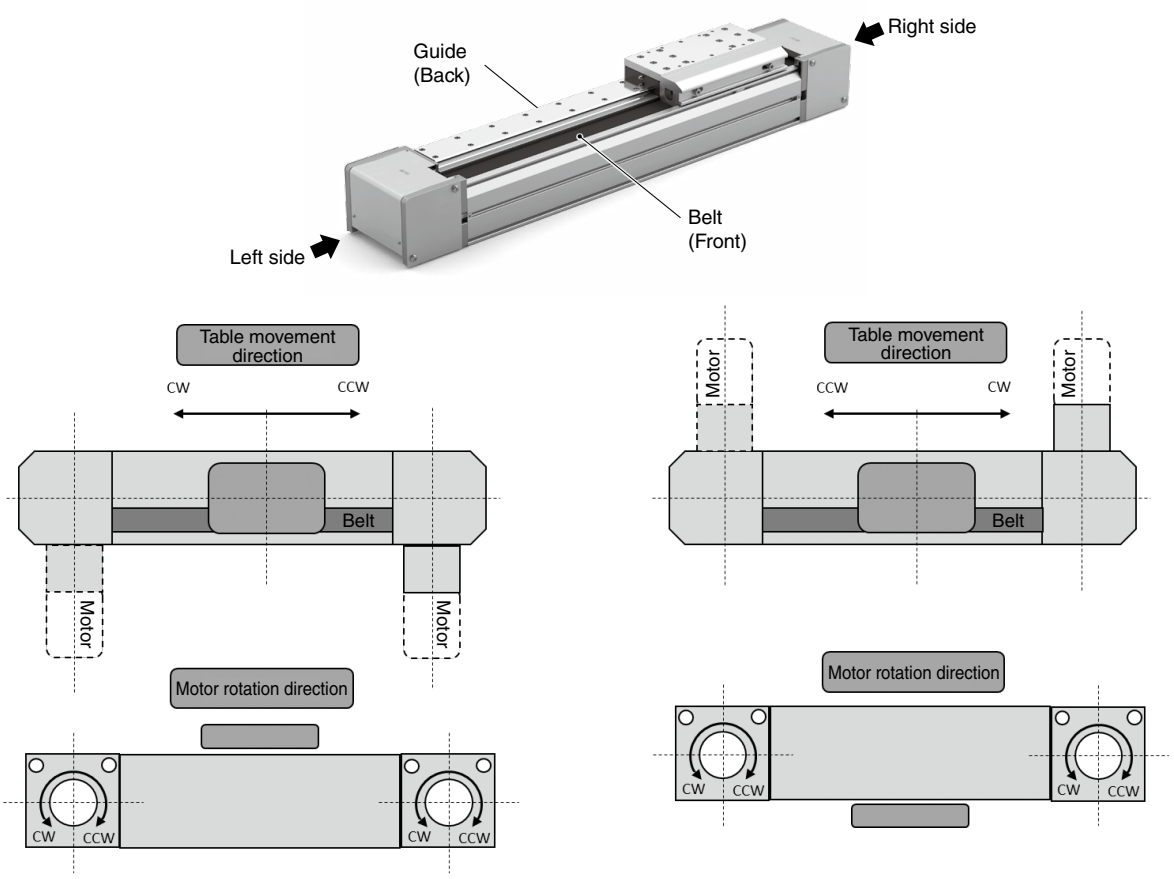

Rod Type

Applicable models: LEY□DN□, LEYG□DN□/Motor mounting position: In-line

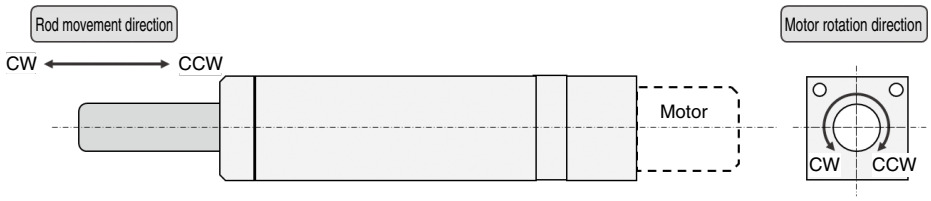

Applicable models: LEY□(_/L/R)N□, LEYG□(_/L/R)N□/Motor mounting position: Top/Right/Left side parallel

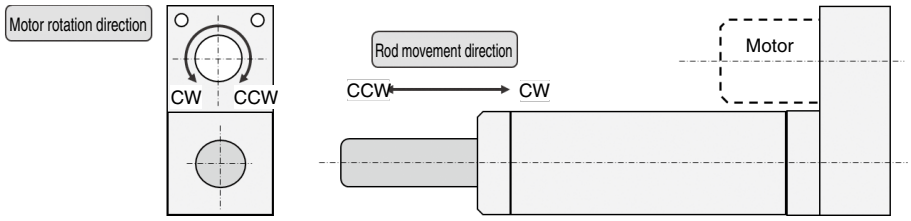

⚠ Safety Instructions

These safety instructions are intended to prevent hazardous situations and/or equipment damage. These instructions indicate the level of potential hazard with the labels of **"Caution," "Warning"** or **"Danger."** They are all important notes for safety and must be followed in addition to International Standards (ISO/IEC)*1), and other safety regulations.

⚠ Danger : **Danger** indicates a hazard with a high level of risk which, if not avoided, will result in death or serious injury.

⚠ Warning: **Warning** indicates a hazard with a medium level of risk which, if not avoided, could result in death or serious injury.

⚠ Caution: **Caution** indicates a hazard with a low level of risk which, if not avoided, could result in minor or moderate injury.

*1) ISO 4414: Pneumatic fluid power - General rules and safety requirements for systems and their components
ISO 4413: Hydraulic fluid power - General rules and safety requirements for systems and their components
IEC 60204-1: Safety of machinery - Electrical equipment of machines - Part 1: General requirements
ISO 10218-1: Robots and robotic devices - Safety requirements for industrial robots - Part 1:Robots
etc.

⚠ Warning

1. The compatibility of the product is the responsibility of the person who designs the equipment or decides its specifications.

Since the product specified here is used under various operating conditions, its compatibility with specific equipment must be decided by the person who designs the equipment or decides its specifications based on necessary analysis and test results. The expected performance and safety assurance of the equipment will be the responsibility of the person who has determined its compatibility with the product. This person should also continuously review all specifications of the product referring to its latest catalog information, with a view to giving due consideration to any possibility of equipment failure when configuring the equipment.

2. Only personnel with appropriate training should operate machinery and equipment.

The product specified here may become unsafe if handled incorrectly. The assembly, operation and maintenance of machines or equipment including our products must be performed by an operator who is appropriately trained and experienced.

3. Do not service or attempt to remove product and machinery/ equipment until safety is confirmed.

1. The inspection and maintenance of machinery/equipment should only be performed after measures to prevent falling or runaway of the driven objects have been confirmed.
2. When the product is to be removed, confirm that the safety measures as mentioned above are implemented and the power from any appropriate source is cut, and read and understand the specific product precautions of all relevant products carefully.
3. Before machinery/equipment is restarted, take measures to prevent unexpected operation and malfunction.

4. Our products cannot be used beyond their specifications. Our products are not developed, designed, and manufactured to be used under the following conditions or environments. Use under such conditions or environments is not covered.

1. Conditions and environments outside of the given specifications, or use outdoors or in a place exposed to direct sunlight.
2. Use for nuclear power, railways, aviation, space equipment, ships, vehicles, military application, equipment affecting human life, body, and property, fuel equipment, entertainment equipment, emergency shut-off circuits, press clutches, brake circuits, safety equipment, etc., and use for applications that do not conform to standard specifications such as catalogs and operation manuals.
3. Use for interlock circuits, except for use with double interlock such as installing a mechanical protection function in case of failure. Please periodically inspect the product to confirm that the product is operating properly.

⚠ Caution

We develop, design, and manufacture our products to be used for automatic control equipment, and provide them for peaceful use in manufacturing industries.
Use in non-manufacturing industries is not covered.
Products we manufacture and sell cannot be used for the purpose of transactions or certification specified in the Measurement Act.
The new Measurement Act prohibits use of any unit other than SI units in Japan.

Limited warranty and Disclaimer/ Compliance Requirements

The product used is subject to the following "Limited warranty and Disclaimer" and "Compliance Requirements".
Read and accept them before using the product.

Limited warranty and Disclaimer

1. The warranty period of the product is 1 year in service or 1.5 years after the product is delivered, whichever is first.*2)
   Also, the product may have specified durability, running distance or replacement parts. Please consult your nearest sales branch.
2. For any failure or damage reported within the warranty period which is clearly our responsibility, a replacement product or necessary parts will be provided.
   This limited warranty applies only to our product independently, and not to any other damage incurred due to the failure of the product.
3. Prior to using SMC products, please read and understand the warranty terms and disclaimers noted in the specified catalog for the particular products.

***2) Vacuum pads are excluded from this 1 year warranty.**
A vacuum pad is a consumable part, so it is warranted for a year after it is delivered.
Also, even within the warranty period, the wear of a product due to the use of the vacuum pad or failure due to the deterioration of rubber material are not covered by the limited warranty.

Compliance Requirements

1. The use of SMC products with production equipment for the manufacture of weapons of mass destruction (WMD) or any other weapon is strictly prohibited.
2. The exports of SMC products or technology from one country to another are governed by the relevant security laws and regulations of the countries involved in the transaction. Prior to the shipment of a SMC product to another country, assure that all local rules governing that export are known and followed.

Revision History

Edition B
- Compatible motor manufacturers have been added.
- LEF: The motor parallel type has been added.
- LEY63: The motor top mounting and motor parallel types have been added.
- The number of pages has been increased from 88 to 108. TW

Edition C
- A compatible motor manufacturer has been added. UO

Edition D
- LEF: An option without grease applied to the seal band part has been added. Auto switches and mounting brackets have been added. Positioning pin holes (Body bottom 2 locations) have been added.
- LEJ: Normally closed solid state auto switches have been added.
- LEY/LEYG: Intermediate strokes have been added to the LEY63. Normally closed solid state auto switches have been added.
- The number of pages has been increased from 108 to 128. XT

Edition E
- A large slider type (LET-X11 series) has been added.
- A high precision type slide table (LESYH series) has been added.
- The number of pages has been increased from 128 to 224. CP

⚠ Safety Instructions Be sure to read the "Handling Precautions for SMC Products" (M-E03-3) and "Operation Manual" before use.

SMC Corporation
Akihabara UDX 15F,
4-14-1, Sotokanda, Chiyoda-ku, Tokyo 101-0021, JAPAN
Phone: 03-5207-8249 Fax: 03-5298-5362
https://www.smcworld.com